PIC16(L)F1454/5/9
Data Sheet

14/20-Pin Flash, 8-Bit USB Microcontrollers with XLP Technology

© 2012 Microchip Technology Inc.

Note the following details of the code protection feature on Microchip devices:

- Microchip products meet the specification contained in their particular Microchip Data Sheet.
- Microchip believes that its family of products is one of the most secure families of its kind on the market today, when used in the intended manner and under normal conditions.
- There are dishonest and possibly illegal methods used to breach the code protection feature. All of these methods, to our knowledge, require using the Microchip products in a manner outside the operating specifications contained in Microchip's Data Sheets. Most likely, the person doing so is engaged in theft of intellectual property.
- Microchip is willing to work with the customer who is concerned about the integrity of their code.
- Neither Microchip nor any other semiconductor manufacturer can guarantee the security of their code. Code protection does not mean that we are guaranteeing the product as "unbreakable."

Code protection is constantly evolving. We at Microchip are committed to continuously improving the code protection features of our products. Attempts to break Microchip's code protection feature may be a violation of the Digital Millennium Copyright Act. If such acts allow unauthorized access to your software or other copyrighted work, you may have a right to sue for relief under that Act.

Information contained in this publication regarding device applications and the like is provided only for your convenience and may be superseded by updates. It is your responsibility to ensure that your application meets with your specifications. MICROCHIP MAKES NO REPRESENTATIONS OR WARRANTIES OF ANY KIND WHETHER EXPRESS OR IMPLIED, WRITTEN OR ORAL, STATUTORY OR OTHERWISE, RELATED TO THE INFORMATION, INCLUDING BUT NOT LIMITED TO ITS CONDITION, QUALITY, PERFORMANCE, MERCHANTABILITY OR FITNESS FOR PURPOSE. Microchip disclaims all liability arising from this information and its use. Use of Microchip devices in life support and/or safety applications is entirely at the buyer's risk, and the buyer agrees to defend, indemnify and hold harmless Microchip from any and all damages, claims, suits, or expenses resulting from such use. No licenses are conveyed, implicitly or otherwise, under any Microchip intellectual property rights.

QUALITY MANAGEMENT SYSTEM CERTIFIED BY DNV

= ISO/TS 16949 =

Trademarks

The Microchip name and logo, the Microchip logo, dsPIC, KEELOQ, KEELOQ logo, MPLAB, PIC, PICmicro, PICSTART, PIC32 logo, rfPIC and UNI/O are registered trademarks of Microchip Technology Incorporated in the U.S.A. and other countries.

FilterLab, Hampshire, HI-TECH C, Linear Active Thermistor, MXDEV, MXLAB, SEEVAL and The Embedded Control Solutions Company are registered trademarks of Microchip Technology Incorporated in the U.S.A.

Analog-for-the-Digital Age, Application Maestro, chipKIT, chipKIT logo, CodeGuard, dsPICDEM, dsPICDEM.net, dsPICworks, dsSPEAK, ECAN, ECONOMONITOR, FanSense, HI-TIDE, In-Circuit Serial Programming, ICSP, Mindi, MiWi, MPASM, MPLAB Certified logo, MPLIB, MPLINK, mTouch, Omniscient Code Generation, PICC, PICC-18, PICDEM, PICDEM.net, PICkit, PICtail, REAL ICE, rfLAB, Select Mode, Total Endurance, TSHARC, UniWinDriver, WiperLock and ZENA are trademarks of Microchip Technology Incorporated in the U.S.A. and other countries.

SQTP is a service mark of Microchip Technology Incorporated in the U.S.A.

All other trademarks mentioned herein are property of their respective companies.

© 2012, Microchip Technology Incorporated, Printed in the U.S.A., All Rights Reserved.

Printed on recycled paper.

ISBN: 9781620763476

Microchip received ISO/TS-16949:2009 certification for its worldwide headquarters, design and wafer fabrication facilities in Chandler and Tempe, Arizona; Gresham, Oregon and design centers in California and India. The Company's quality system processes and procedures are for its PIC® MCUs and dsPIC® DSCs, KEELOQ® code hopping devices, Serial EEPROMs, microperipherals, nonvolatile memory and analog products. In addition, Microchip's quality system for the design and manufacture of development systems is ISO 9001:2000 certified.

PIC16(L)F1454/5/9

14/20-Pin, 8-Bit Flash USB Microcontroller with XLP Technology

High-Performance RISC CPU:

- C Compiler Optimized Architecture
- Only 49 Instructions
- 14 Kbytes Linear Program Memory Addressing
- 1024 Bytes Linear Data Memory Addressing
- Operating Speed:
  - DC – 48 MHz clock input
  - DC – 83 ns instruction cycle
  - Selectable 3x or 4x PLL for specific frequencies
- Interrupt Capability with Automatic Context Saving
- 16-Level Deep Hardware Stack with Optional Overflow/Underflow Reset
- Direct, Indirect and Relative Addressing modes:
  - Two full 16-bit File Select Registers (FSRs) capable of accessing both data or program memory
  - FSRs can read program and data memory

Special Microcontroller Features:

- Operating Voltage Range:
  - 1.8V to 3.6V (PIC16LF145X)
  - 2.3V to 5.5V (PIC16F145X)
- Self-Programmable under Software Control
- Power-on Reset (POR)
- Power-up Timer (PWRT)
- Programmable Brown-Out Reset (BOR)
- Low-Power BOR (LPBOR)
- Extended Watchdog Timer (WDT):
  - Programmable period from 1 ms to 256s
- Programmable Code Protection
- In-Circuit Serial Programming™ (ICSP™) via Two Pins
- Enhanced Low-Voltage Programming (LVP)
- Power-Saving Sleep mode:

Universal Serial Bus (USB) Features:

- Self-Tuning from USB Host (eliminates need for external crystal)
- USB V2.0 Compliant SIE
- Low Speed (1.5 Mb/s) and Full Speed (12 Mb/s)
- Supports Control, Interrupt, Isochronous and Bulk Transfers
- Supports up to Eight Bidirectional Endpoints
- 512-Byte Dual Access RAM for USB
- Interrupt-on-Change (IOC) on D+/D- for USB Host Detection
- Configurable Internal Pull-up Resistors for use with USB

Extreme Low-Power Management PIC16LF145X with XLP:

- Sleep mode: 25 nA @ 1.8V, typical
- Watchdog Timer Current: 290 nA @ 1.8V, typical
- Timer1 Oscillator: 600 nA @ 32 kHz, typical
- Operating Current: 25 μA/MHz @ 1.8V, typical

Flexible Oscillator Structure:

- 16 MHz Internal Oscillator Block:
  - Factory calibrated to ±0.25%, typical
  - Software selectable frequency range from 16 MHz to 31 kHz
  - Tunable to 0.25% across temperature range
  - 48 MHz with 3x PLL
- 31 kHz Low-Power Internal Oscillator
- Clock Switching with run from:
  - Primary Oscillator
  - Secondary Oscillator (SOSC)
  - Internal Oscillator
- Clock Reference Output:
  - Clock Prescaler
  - CLKOUT

Analog Features(1):

- Analog-to-Digital Converter (ADC):
  - 10-bit resolution
  - Up to nine external channels
  - Two internal channels:
    - Fixed Voltage Reference channel
    - DAC output channel
  - Auto acquisition capability
  - Conversion available during Sleep
- Two Comparators:
  - Rail-to-rail inputs
  - Power mode control
  - Software controllable hysteresis
- Voltage Reference module:
  - Fixed Voltage Reference (FVR) with 1.024V, 2.048V and 4.096V output levels
- Up to One Rail-to-Rail Resistive 5-Bit DAC with Positive Reference Selection

Note 1: Analog features are not available on PIC16(L)F1454 devices.

Peripheral Features:

- Up to 14 I/O Pins and Three Input-only Pins:
  - High current sink/source 25 mA/25 mA
  - Individually programmable weak pull-ups
  - Individually programmable Interrupt-On-Change (IOC) pins
- Timer0: 8-Bit Timer/Counter with 8-Bit Programmable Prescaler
- Enhanced Timer1:
  - 16-bit timer/counter with prescaler
  - External Gate Input mode
- Timer2: 8-Bit Timer/Counter with 8-Bit Period Register, Prescaler and Postscaler
- Two 10-bit PWM modules
- Complementary Waveform Generator (CWG)(1):
  - Up to four selectable signal sources
  - Selectable falling and rising edge dead-band control
  - Polarity control
  - Up to four auto-shutdown sources
  - Multiple input sources: PWM, Comparators
- Master Synchronous Serial Port (MSSP) with SPI and I^2C™ with:
  - 7-bit address masking
  - SMBus/PMBus™ compatibility
- Enhanced Universal Synchronous Asynchronous Receiver Transmitter (EUSART):
  - RS-232, RS-485 and LIN compatible
  - Auto-baud detect
  - Auto-wake-up on Start

Note 1: Not available on PIC16(L)F1454 devices.

PIC16(L)F145X Family Types

Device	Data Sheet Index	Program Memory Flash (words)	Data SRAM (bytes)	I/Os(2)	10-bit ADC (ch)	Comparators	DAC	Timers (8/16-bit)	PWM	EUSART	MSSP (I^2C™/SPI)	CWG	USB	Clock Reference	Debug(1)	XLP
PIC16(L)F1454	(1)	8192	1024	11	—	—	—	2/1	2	1	1	—	1	1	I/H	Y
PIC16(L)F1455	(1)	8192	1024	11	5	2	1	2/1	2	1	1	1	1	1	I/H	Y
PIC16(L)F1459	(1)	8192	1024	17	9	2	1	2/1	2	1	1	1	1	1	I/H	Y

Note 1: I - Debugging, Integrated on Chip; H - Debugging, Available using Debug Header; E - Emulation, Available using Emulation Header.

2: Three pins are input-only.

Data Sheet Index:

1: DS41639 PIC16(L)F1454/1455/1459 Data Sheet, 14/20-Pin Flash, 8-Bit USB Microcontrollers.

Note: For other small form-factor package availability and marking information, please visit www.microchip.com/packaging or contact your local sales office.

 © 2012 Microchip Technology Inc.

FIGURE 1: 14-PIN PDIP, SOIC, TSSOP DIAGRAM FOR PIC16(L)F1454/1455

PDIP, SOIC, TSSOP

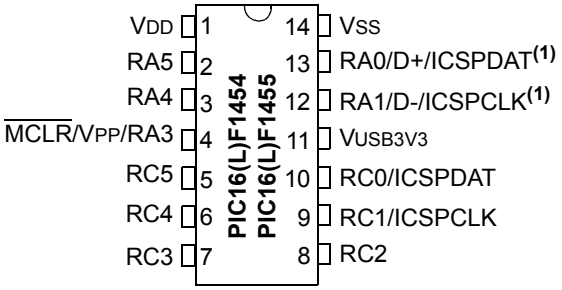

Note 1: LVP support for PIC18(L)F1XK50 legacy designs.

2: See Table 1 and Table 2 for location of all peripheral functions.

FIGURE 2: 16-PIN QFN DIAGRAM FOR PIC16(L)F1454/1455

QFN (4x4)

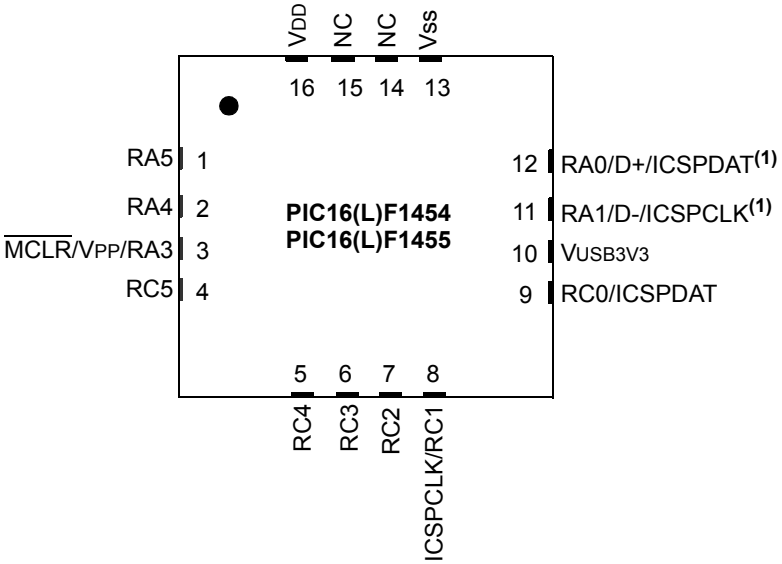

Note 1: LVP support for PIC18(L)F1XK50 legacy designs.

2: See Table 1 and Table 2 for location of all peripheral functions.

FIGURE 3: 20-PIN PDIP, SOIC, SSOP DIAGRAM FOR PIC16(L)F1459

PDIP, SOIC, SSOP

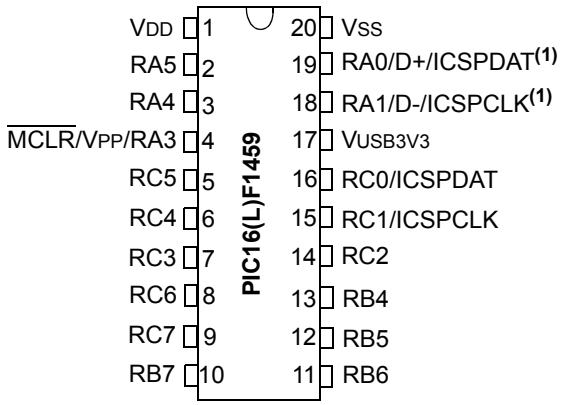

Note 1: LVP support for PIC18(L)F1XK50 legacy designs.

2: See Table 3 for location of all peripheral functions.

FIGURE 4: 20-PIN QFN DIAGRAM FOR PIC16(L)F1459

QFN (4x4)

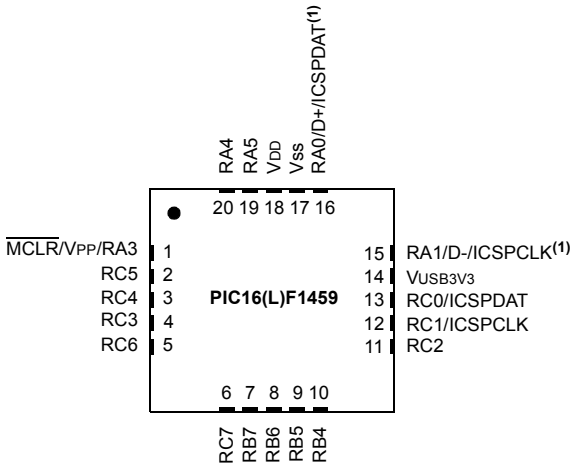

Note 1: LVP support for PIC18(L)F1XK50 legacy designs.

2: See Table 3 for location of all peripheral functions.

 © 2012 Microchip Technology Inc.

TABLE 1: 14-PIN ALLOCATION TABLE (PIC16(L)F1454)

I/O	14-Pin PDIP/SOIC/TSSOP	16-Pin QFN	ADC	Reference	Comparator	Timer	CWG	USB	EUSART	PWM	MSSP	Interrupt	Basic
RA0	13	12	—	—	—	—	—	D+	—	—	—	IOC	ICSPDAT(3)
RA1	12	11	—	—	—	—	—	D-	—	—	—	IOC	ICSPCLK(3)
RA2	—	—	—	—	—	—	—	—	—	—	—	—	—
RA3	4	3	—	—	—	T1G(2)	—	—	—	—	$\overline{SS}$(2)	IOC	$\overline{MCLR}$ VPP
RA4	3	2	—	—	—	SOSCO T1G(1)	—	—	—	—	SDO(2)	IOC	CLKOUT OSC2 CLKR(1)
RA5	2	1	—	—	—	SOSCI T1CKI	—	—	—	PWM2(2)	—	IOC	CLKIN OSC1
RC0	10	9	—	—	—	—	—	—	—	—	SCL SCK	—	ICSPDAT
RC1	9	8	—	—	—	—	—	—	—	—	SDA SDI	INT	ICSPCLK
RC2	8	7	—	—	—	—	—	—	—	—	SDO(1)	—	—
RC3	7	6	—	—	—	—	—	—	—	PWM2(1)	$\overline{SS}$(1)	—	CLKR(2)
RC4	6	5	—	—	—	—	—	—	TK CK	—	—	—	—
RC5	5	4	—	—	—	T0CKI	—	—	RX DT	PWM1	—	—	—
VDD	1	16	—	—	—	—	—	—	—	—	—	—	VDD
VSS	14	13	—	—	—	—	—	—	—	—	—	—	VSS
VUSB3V3	11	10	—	—	—	—	—	VUSB3V3	—	—	—	—	—

Note 1: Default location for peripheral pin function. Alternate location can be selected using the APFCON register.
2: Alternate location for peripheral pin function selected by the APFCON register.
3: LVP support for PIC18(L)F1XK50 legacy designs.

TABLE 2: 14-PIN ALLOCATION TABLE (PIC16(L)F1455)

I/O	14-Pin PDIP/SOIC/TSSOP	16-Pin QFN	ADC	Reference	Comparator	Timer	CWG	USB	EUSART	PWM	MSSP	Interrupt	Basic
RA0	13	12	—	—	—	—	—	D+	—	—	—	IOC	ICSPDAT(3)
RA1	12	11	—	—	—	—	—	D-	—	—	—	IOC	ICSPCLK(3)
RA2	—	—	—	—	—	—	—	—	—	—	—	—	—
RA3	4	3	—	—	—	T1G(2)	—	—	—	—	$\overline{SS}$(2)	IOC	$\overline{MCLR}$ VPP
RA4	3	2	AN3	—	—	SOSCO T1G(1)	—	—	—	—	SDO(2)	IOC	CLKOUT OSC2 CLKR(1)
RA5	2	1	—	—	—	SOSCI T1CKI	—	—	—	PWM2(2)	—	IOC	CLKIN OSC1
RC0	10	9	AN4	VREF+	C1IN+ C2IN+	—	—	—	—	—	SCL SCK	—	ICSPDAT
RC1	9	8	AN5	—	C1IN1- C2IN1-	—	$\overline{CWGFLT}$	—	—	—	SDA SDI	INT	ICSPCLK
RC2	8	7	AN6	DACOUT1	C1IN2- C2IN2-	—	—	—	—	—	SDO(1)	—	—
RC3	7	6	AN7	DACOUT2	C1IN3- C2IN3-	—	—	—	—	PWM2(1)	$\overline{SS}$(1)	—	CLKR(2)
RC4	6	5	—	—	C1OUT C2OUT	—	CWG1B	—	TK CK	—	—	—	—
RC5	5	4	—	—	—	T0CKI	CWG1A	—	RX DT	PWM1	—	—	—
VDD	1	16	—	—	—	—	—	—	—	—	—	—	VDD
VSS	14	13	—	—	—	—	—	—	—	—	—	—	VSS
VUSB3V3	11	10	—	—	—	—	—	VUSB3V3	—	—	—	—	—

Note 1: Default location for peripheral pin function. Alternate location can be selected using the APFCON register.
2: Alternate location for peripheral pin function selected by the APFCON register.
3: LVP support for PIC18(L)F1XK50 legacy designs.

 © 2012 Microchip Technology Inc.

TABLE 3: 20-PIN ALLOCATION TABLE (PIC16(L)F1459)

I/O	20-Pin PDIP/SOIC/SSOP	20-Pin QFN	ADC	Reference	Comparator	Timer	CWG	USB	EUSART	PWM	MSSP	Interrupt	Basic
RA0	19	16	—	—	—	—	—	D+	—	—	—	IOC	ICSPDAT(3)
RA1	18	15	—	—	—	—	—	D-	—	—	—	IOC	ICSPCLK(3)
RA2	—	—	—	—	—	—	—	—	—	—	—	—	—
RA3	4	1	—	—	—	T1G(2)	—	—	—	—	$\overline{SS}$(2)	IOC	$\overline{MCLR}$ VPP
RA4	3	20	AN3	—	—	SOSCO T1G(1)	—	—	—	—	—	IOC	OSC2 CLKOUT CLKR(1)
RA5	2	19	—	—	—	SOSCI T1CKI	—	—	—	—	—	IOC	OSC1 CLKIN
RB4	13	10	AN10	—	—	—	—	—	—	—	SDA SDI	IOC	—
RB5	12	9	AN11	—	—	—	—	—	RX DX	—	—	IOC	—
RB6	11	8	—	—	—	—	—	—	—	—	SCL SCK	IOC	—
RB7	10	7	—	—	—	—	—	—	TX CK	—	—	IOC	—
RC0	16	13	AN4	VREF+	C1IN+ C2IN+	—	—	—	—	—	—	—	ICSPDAT
RC1	15	12	AN5	—	C1IN1- C2IN1-	—	$\overline{CWGFLT}$	—	—	—	—	INT	ICSPCLK
RC2	14	11	AN6	DACOUT1	C1IN2- C2IN2-	—	—	—	—	—	—	—	—
RC3	7	4	AN7	DACOUT2	C1IN3- C2IN3-	—	—	—	—	—	—	—	CLKR(2)
RC4	6	3	—	—	C1OUT C2OUT	—	CWG1B	—	—	—	—	—	—
RC5	5	2	—	—	—	T0CKI	CWG1A	—	—	PWM1	—	—	—
RC6	8	5	AN8	—	—	—	—	—	—	PWM2	$\overline{SS}$(1)	—	—
RC7	9	6	AN9	—	—	—	—	—	—	—	SDO	—	—
VDD	1	18	—	—	—	—	—	—	—	—	—	—	VDD
VSS	20	17	—	—	—	—	—	—	—	—	—	—	VSS
VUSB3V3	17	14	—	—	—	—	—	VUSB3V3	—	—	—	—	—

Note 1: Default location for peripheral pin function. Alternate location can be selected using the APFCON register.
2: Alternate location for peripheral pin function selected by the APFCON register.
3: LVP support for PIC18(L)F1XK50 legacy designs.

Table of Contents

1.0 Device Overview 13
2.0 Enhanced Mid-Range CPU 21
3.0 Memory Organization 23
4.0 Device Configuration 51
5.0 Oscillator Module (With Fail-Safe Clock Monitor) 57
6.0 Resets 79
7.0 Reference Clock Module 87
8.0 Interrupts 91
9.0 Power-Down Mode (Sleep) 103
10.0 Watchdog Timer (WDT) 107
11.0 Flash Program Memory Control 112
12.0 I/O Ports 129
13.0 Interrupt-On-Change 143
14.0 Fixed Voltage Reference (FVR) (PIC16(L)F1455/9 only) 149
15.0 Temperature Indicator Module (PIC16(L)F1455/9 only) 151
16.0 Analog-to-Digital Converter (ADC) Module (PIC16(L)F1455/9 only) 153
17.0 Digital-to-Analog Converter (DAC) Module (PIC16(L)F1455/9 only) 169
18.0 Comparator Module (PIC16(L)F1455/9 only) 173
19.0 Timer0 Module 183
20.0 Timer1 Module with Gate Control 187
21.0 Timer2 Module 199
22.0 Master Synchronous Serial Port (MSSP) Module 203
23.0 Enhanced Universal Synchronous Asynchronous Receiver Transmitter (EUSART) 257
24.0 Pulse Width Modulation (PWM) Module 287
25.0 Complementary Waveform Generator (CWG) Module (PIC16(L)F1455/9 only)293
26.0 Universal Serial Bus (USB) 309
27.0 In-Circuit Serial Programming™ (ICSP™) 337
28.0 Instruction Set Summary 339
29.0 Electrical Specifications 353
30.0 DC and AC Characteristics Graphs and Charts 383
31.0 Development Support 385
32.0 Packaging Information 389
Appendix A: Data Sheet Revision History 407
Index 409
The Microchip Web Site 415
Customer Change Notification Service 415
Customer Support 415
Reader Response 416
Product Identification System 417

 © 2012 Microchip Technology Inc.

TO OUR VALUED CUSTOMERS

It is our intention to provide our valued customers with the best documentation possible to ensure successful use of your Microchip products. To this end, we will continue to improve our publications to better suit your needs. Our publications will be refined and enhanced as new volumes and updates are introduced.

If you have any questions or comments regarding this publication, please contact the Marketing Communications Department via E-mail at **docerrors@microchip.com** or fax the **Reader Response Form** in the back of this data sheet to (480) 792-4150. We welcome your feedback.

Most Current Data Sheet

To obtain the most up-to-date version of this data sheet, please register at our Worldwide Web site at:

http://www.microchip.com

You can determine the version of a data sheet by examining its literature number found on the bottom outside corner of any page. The last character of the literature number is the version number, (e.g., DS30000A is version A of document DS30000).

Errata

An errata sheet, describing minor operational differences from the data sheet and recommended workarounds, may exist for current devices. As device/documentation issues become known to us, we will publish an errata sheet. The errata will specify the revision of silicon and revision of document to which it applies.

To determine if an errata sheet exists for a particular device, please check with one of the following:

- Microchip's Worldwide Web site; **http://www.microchip.com**
- Your local Microchip sales office (see last page)

When contacting a sales office, please specify which device, revision of silicon and data sheet (include literature number) you are using.

Customer Notification System

Register on our web site at **www.microchip.com** to receive the most current information on all of our products.

NOTES:

 © 2012 Microchip Technology Inc.

1.0 DEVICE OVERVIEW

The PIC16(L)F1454/5/9 are described within this data sheet. They are available in 14/20-pin packages. Figure 1-1 shows a block diagram of the PIC16(L)F1454/5/9 devices. Tables 1-2, 1-3 and 1-4 show the pinout descriptions.

Reference Table 1-1 for peripherals available per device.

TABLE 1-1: DEVICE PERIPHERAL SUMMARY

Peripheral		PIC16F1454 PIC16LF1454	PIC16F1455 PIC16LF1455	PIC16F1459 PIC16LF1459
Analog-to-Digital Converter (ADC)			●	●
Clock Reference		●	●	●
Complementary Wave Generator (CWG)			●	●
Digital-to-Analog Converter (DAC)			●	●
Enhanced Universal Synchronous/Asynchronous Receiver/Transmitter (EUSART)		●	●	●
Fixed Voltage Reference (FVR)			●	●
Temperature Indicator			●	●
Universal Serial Bus (USB)		●	●	●
Comparators				
	C1		●	●
	C2		●	●
Master Synchronous Serial Ports				
	MSSP1	●	●	●
PWM Modules				
	PWM1	●	●	●
	PWM2	●	●	●
Timers				
	Timer0	●	●	●
	Timer1	●	●	●
	Timer2	●	●	●

FIGURE 1-1: PIC16(L)F1454/5/9 BLOCK DIAGRAM

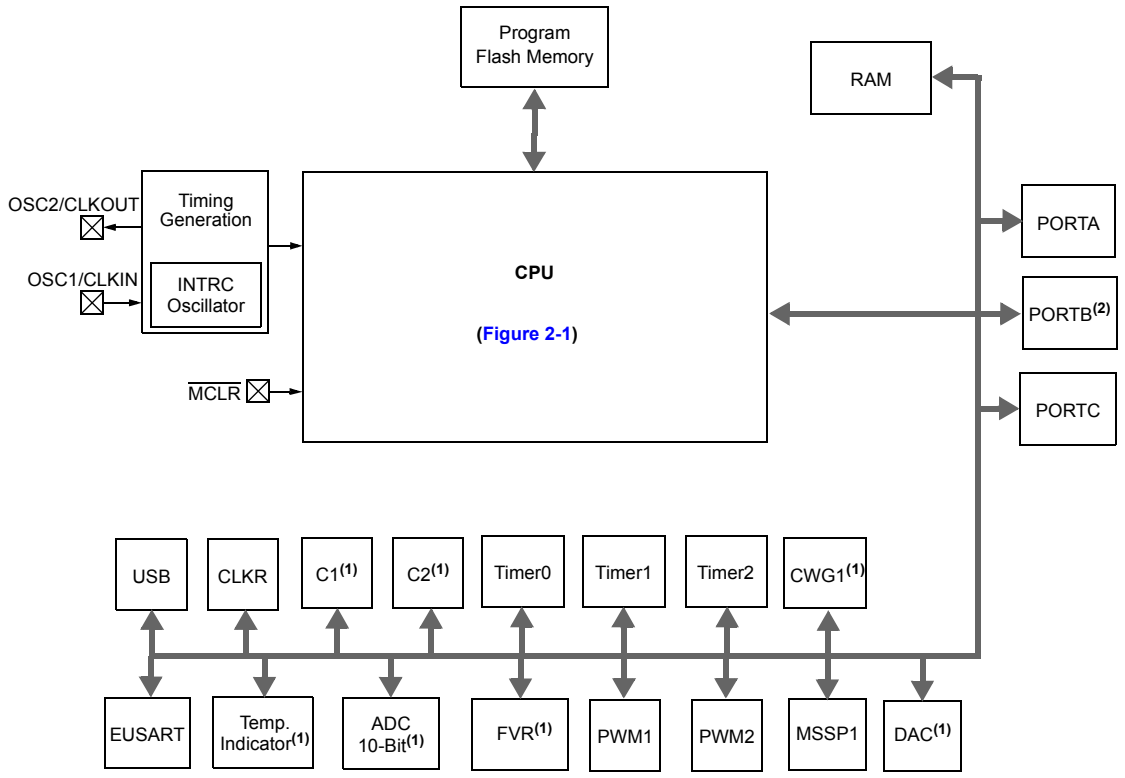

Note 1: PIC16(L)F1455/9 only.
2: PIC16(L)F1459 only.

 © 2012 Microchip Technology Inc.

TABLE 1-2: PIC16(L)F1454 PINOUT DESCRIPTION

Name	Function	Input Type	Output Type	Description
RA0/D+/ICSPDAT(3)	RA0	TTL	CMOS	General purpose I/O.
	D+	XTAL	XTAL	USB differential plus line.
	ICSPDAT	ST	CMOS	ICSP™ Data I/O.
RA1/D-/ICSPCLK(3)	RA1	TTL	CMOS	General purpose I/O.
	D-	XTAL	XTAL	USB differential minus line.
	ICSPCLK	ST	—	ICSP Programming Clock.
RA3/VPP/T1G(2)/$\overline{SS}$(2)/$\overline{MCLR}$	RA3	TTL	—	General purpose input with IOC and WPU.
	VPP	HV	—	Programming voltage.
	T1G	ST	—	Timer1 Gate input.
	$\overline{SS}$	ST	—	Slave Select input.
	$\overline{MCLR}$	ST	—	Master Clear with internal pull-up.
RA4/SOSCO/CLKOUT/ T1G(1)/SDO(2)/CLKR(1)/OSC2	RA4	TTL	CMOS	General purpose I/O.
	SOSCO	XTAL	XTAL	Secondary Oscillator Connection.
	CLKOUT	—	CMOS	FOSC/4 output.
	T1G	ST	—	Timer1 Gate input.
	SDO	—	CMOS	SPI data output.
	CLKR	—	CMOS	Clock reference output.
	OSC2	XTAL	XTAL	Primary Oscillator connection.
RA5/CLKIN/SOSCI/T1CKI/ PWM2(2)/OSC1	RA5	TTL	CMOS	General purpose I/O.
	CLKIN	CMOS	—	External clock input (EC mode).
	SOSCI	XTAL	XTAL	Secondary Oscillator Connection.
	T1CKI	ST	—	Timer1 clock input.
	PWM2	—	CMOS	PWM output.
	OSC1	XTAL	XTAL	Primary Oscillator Connection.
RC0/SCL/SCK/ICSPDAT	RC0	TTL	CMOS	General purpose I/O.
	SCL	I^2C	OD	I^2C™ clock.
	SCK	ST	CMOS	SPI clock.
	ICSPDAT	ST	CMOS	ICSP™ Data I/O.
RC1/SDA/SDI/INT/ICSPCLK	RC1	TTL	CMOS	General purpose I/O.
	SDA	I^2C	OD	I^2C data input/output.
	SDI	CMOS	—	SPI data input.
	INT	ST	—	External input.
	ICSPCLK	ST	—	ICSP Programming Clock.
RC2/SDO(1)	RC2	TTL	CMOS	General purpose I/O.
	SDO	—	CMOS	SPI data output.
RC3/PWM2(1)/$\overline{SS}$(1)/CLKR(2)	RC3	TTL	CMOS	General purpose I/O.
	PWM2	—	CMOS	PWM output.
	$\overline{SS}$	ST	—	Slave Select input.
	CLKR	—	CMOS	Clock reference output.

Legend: AN = Analog input or output; CMOS = CMOS compatible input or output; OD = Open Drain; TTL = TTL compatible input; ST = Schmitt Trigger input with CMOS levels; I^2C™ = Schmitt Trigger input with I^2C levels; HV = High Voltage; XTAL = Crystal

Note 1: Default location for peripheral pin function. Alternate location can be selected using the APFCON register.

2: Alternate location for peripheral pin function selected by the APFCON register.

3: LVP support for PIC18(L)F1XK50 legacy designs.

TABLE 1-2: PIC16(L)F1454 PINOUT DESCRIPTION (CONTINUED)

Name	Function	Input Type	Output Type	Description
RC4/TX/CK	RC4	TTL	CMOS	General purpose I/O.
	TX	—	CMOS	USART asynchronous transmit.
	CK	ST	CMOS	USART synchronous clock.
RC5/T0CKI/RX/DT/PWM1	RC5	TTL	CMOS	General purpose I/O.
	T0CKI	ST	—	Timer0 clock input.
	RX	ST	—	USART asynchronous input.
	DT	ST	CMOS	USART synchronous data.
	PWM1	—	CMOS	PWM output.
VDD	VDD	Power	—	Positive supply.
VSS	VSS	Power	—	Ground reference.
VUSB3V3	VUSB3V3	Power	—	Positive supply for USB transceiver.

Legend: AN = Analog input or output; CMOS = CMOS compatible input or output; OD = Open Drain; TTL = TTL compatible input; ST = Schmitt Trigger input with CMOS levels; I^{2}C™ = Schmitt Trigger input with I^{2}C levels; HV = High Voltage; XTAL = Crystal

Note 1: Default location for peripheral pin function. Alternate location can be selected using the APFCON register.

2: Alternate location for peripheral pin function selected by the APFCON register.

3: LVP support for PIC18(L)F1XK50 legacy designs.

 © 2012 Microchip Technology Inc.

TABLE 1-3: PIC16(L)F1455 PINOUT DESCRIPTION

Name	Function	Input Type	Output Type	Description
RA0/D+/ICSPDAT(3)	RA0	TTL	CMOS	General purpose I/O.
	D+	XTAL	XTAL	USB differential plus line.
	ICSPDAT	ST	CMOS	ICSP™ Data I/O.
RA1/D-/ICSPCLK(3)	RA1	TTL	CMOS	General purpose I/O.
	D-	XTAL	XTAL	USB differential minus line.
	ICSPCLK	ST	—	ICSP Programming Clock.
RA3/VPP/T1G(2)/$\overline{SS}$(2)/$\overline{MCLR}$	RA3	TTL	—	General purpose input with IOC and WPU.
	VPP	HV	—	Programming voltage.
	T1G	ST	—	Timer1 Gate input.
	$\overline{SS}$	ST	—	Slave Select input.
	$\overline{MCLR}$	ST	—	Master Clear with internal pull-up.
RA4/AN3/SOSCO/CLKOUT/ T1G(1)/SDO(2)/CLKR(1)/OSC2	RA4	TTL	CMOS	General purpose I/O.
	AN3	AN	—	A/D Channel input.
	SOSCO	XTAL	XTAL	Secondary Oscillator Connection.
	CLKOUT	—	CMOS	FOSC/4 output.
	T1G	ST	—	Timer1 Gate input.
	SDO	—	CMOS	SPI data output.
	CLKR	—	CMOS	Clock reference output.
	OSC2	XTAL	XTAL	Primary Oscillator connection.
RA5/CLKIN/SOSCI/T1CKI/ PWM2(2)/OSC1	RA5	TTL	CMOS	General purpose I/O.
	CLKIN	CMOS	—	External clock input (EC mode).
	SOSCI	XTAL	XTAL	Secondary Oscillator Connection.
	T1CKI	ST	—	Timer1 clock input.
	PWM2	—	CMOS	PWM output.
	OSC1	XTAL	XTAL	Primary Oscillator Connection.
RC0/AN4/VREF+/C1IN+/C2IN+/ SCL/SCK/ICSPDAT	RC0	TTL	CMOS	General purpose I/O.
	AN4	AN	—	A/D Channel input.
	VREF+	AN	—	Positive Voltage Reference input.
	C1IN+	AN	—	Comparator positive input.
	C2IN+	AN	—	Comparator positive input.
	SCL	I^2C	OD	I^2C™ clock.
	SCK	ST	CMOS	SPI clock.
	ICSPDAT	ST	CMOS	ICSP™ Data I/O.

Legend: AN = Analog input or output; CMOS = CMOS compatible input or output; OD = Open Drain; TTL = TTL compatible input; ST = Schmitt Trigger input with CMOS levels; I^2C™ = Schmitt Trigger input with I^2C levels; HV = High Voltage; XTAL = Crystal

Note 1: Default location for peripheral pin function. Alternate location can be selected using the APFCON register.

2: Alternate location for peripheral pin function selected by the APFCON register.

3: LVP support for PIC18(L)F1XK50 legacy designs.

TABLE 1-3: PIC16(L)F1455 PINOUT DESCRIPTION (CONTINUED)

Name	Function	Input Type	Output Type	Description
RC1/AN5/C1IN1-/ C2IN1-/$\overline{\text{CWGFLT}}$/SDA/ SDI/INT/ICSPCLK	RC1	TTL	CMOS	General purpose I/O.
	AN5	AN	—	A/D Channel input.
	C1IN1-	AN	—	Comparator negative input.
	C2IN1-	AN	—	Comparator negative input.
	$\overline{\text{CWGFLT}}$	ST	—	Complementary Waveform Generator Fault input.
	SDA	I^2C	OD	I^2C™ data input/output.
	SDI	CMOS	—	SPI data input.
	INT	ST	—	External input.
	ICSPCLK	ST	—	ICSP™ Programming Clock.
RC2/AN6/DACOUT1/ C1IN2-/C2IN2-/SDO(1)	RC2	TTL	CMOS	General purpose I/O.
	AN6	AN	—	A/D Channel input.
	DACOUT1	—	AN	Digital-to-Analog Converter output.
	C1IN2-	AN	—	Comparator negative input.
	C2IN2-	AN	—	Comparator negative input.
	SDO	—	CMOS	SPI data output.
RC3/AN7/DACOUT2/ C1IN3-/C2IN3-/PWM2(1)/ $\overline{\text{SS}}$(1)/CLKR(2)	RC3	TTL	CMOS	General purpose I/O.
	AN7	AN	—	A/D Channel input.
	DACOUT2	—	AN	Digital-to-Analog Converter output.
	C1IN3-	AN	—	Comparator negative input.
	C2IN3-	AN	—	Comparator negative input.
	PWM2	—	CMOS	PWM output.
	CLC2IN0	ST	—	Configurable Logic Cell source input.
	CLKR	—	CMOS	Clock reference output.
RC4/C1OUT/C2OUT/ CWG1B/TX/CK	RC4	TTL	CMOS	General purpose I/O.
	C1OUT	—	CMOS	Comparator output.
	C2OUT	—	CMOS	Comparator output.
	CWG1B	—	CMOS	CWG complementary output.
	TX	—	CMOS	USART asynchronous transmit.
	CK	ST	CMOS	USART synchronous clock.
RC5/T0CKI/CWG1A/RX/DT/ PWM1	RC5	TTL	CMOS	General purpose I/O.
	T0CKI	ST	—	Timer0 clock input.
	CWG1A	—	CMOS	CWG complementary output.
	RX	ST	—	USART asynchronous input.
	DT	ST	CMOS	USART synchronous data.
	PWM1	—	CMOS	PWM output.
V_{DD}	V_{DD}	Power	—	Positive supply.
V_{SS}	V_{SS}	Power	—	Ground reference.
V_{USB3V3}	V_{USB3V3}	Power	—	Positive supply for USB transceiver.

Legend: AN = Analog input or output; CMOS = CMOS compatible input or output; OD = Open Drain; TTL = TTL compatible input; ST = Schmitt Trigger input with CMOS levels; I^2C™ = Schmitt Trigger input with I^2C levels; HV = High Voltage; XTAL = Crystal

Note 1: Default location for peripheral pin function. Alternate location can be selected using the APFCON register.

2: Alternate location for peripheral pin function selected by the APFCON register.

3: LVP support for PIC18(L)F1XK50 legacy designs.

 © 2012 Microchip Technology Inc.

TABLE 1-4: PIC16(L)F1459 PINOUT DESCRIPTION

Name	Function	Input Type	Output Type	Description
RA0/D+/ICSPDAT(3)	RA0	TTL	CMOS	General purpose I/O.
	D+	XTAL	XTAL	USB differential plus line.
	ICSPDAT	ST	CMOS	ICSP™ Data I/O.
RA1/D-/ICSPCLK(3)	RA1	TTL	CMOS	General purpose I/O.
	D-	XTAL	XTAL	USB differential minus line.
	ICSPCLK	ST	—	ICSP Programming Clock.
RA3/VPP/T1G(2)/$\overline{SS}$(2)/$\overline{MCLR}$	RA3	TTL	—	General purpose input with IOC and WPU.
	VPP	HV	—	Programming voltage.
	T1G	ST	—	Timer1 Gate input.
	$\overline{SS}$	ST	—	Slave Select input.
	$\overline{MCLR}$	ST	—	Master Clear with internal pull-up.
RA4/AN3/SOSCO/CLKOUT/ T1G(1)/CLKR(1)/OSC2	RA4	TTL	CMOS	General purpose I/O.
	AN3	AN	—	A/D Channel input.
	SOSCO	XTAL	XTAL	Secondary Oscillator Connection.
	CLKOUT	—	CMOS	FOSC/4 output.
	T1G	ST	—	Timer1 Gate input.
	CLKR	—	CMOS	Clock reference output.
	OSC2	XTAL	XTAL	Primary Oscillator connection.
RA5/CLKIN/SOSCI/T1CKI/ OSC1	RA5	TTL	CMOS	General purpose I/O.
	CLKIN	CMOS	—	External clock input (EC mode).
	SOSCI	XTAL	XTAL	Secondary Oscillator Connection.
	T1CKI	ST	—	Timer1 clock input.
	OSC1	XTAL	XTAL	Primary Oscillator Connection.
RB4/AN10/SDA/SDI	RB4	TTL	CMOS	General purpose I/O.
	AN10	AN	—	A/D Channel input.
	SDA	I^2C	OD	I^2C data input/output.
	SDI	CMOS	—	SPI data input.
RB5/AN11/RX/DT	RB5	TTL	CMOS	General purpose I/O.
	AN11	AN	—	A/D Channel input.
	RX	ST	—	USART asynchronous input.
	DT	ST	CMOS	USART synchronous data.
RB6/SCL/SCK	RB6	TTL	CMOS	General purpose I/O.
	SCL	I^2C	OD	I^2C™ clock.
	SCK	ST	CMOS	SPI clock.
RB7/TX/CK	RB7	TTL	CMOS	General purpose I/O.
	TX	—	CMOS	USART asynchronous transmit.
	CK	ST	CMOS	USART synchronous clock.

Legend: AN = Analog input or output; CMOS = CMOS compatible input or output; OD = Open Drain; TTL = TTL compatible input; ST = Schmitt Trigger input with CMOS levels; I^2C™ = Schmitt Trigger input with I^2C levels; HV = High Voltage; XTAL = Crystal

Note 1: Default location for peripheral pin function. Alternate location can be selected using the APFCON register.

2: Alternate location for peripheral pin function selected by the APFCON register.

3: LVP support for PIC18(L)F1XK50 legacy designs.

TABLE 1-4: PIC16(L)F1459 PINOUT DESCRIPTION (CONTINUED)

Name	Function	Input Type	Output Type	Description
RC0/AN4/VREF+/C1IN+/C2IN+/ ICSPDAT	RC0	TTL	CMOS	General purpose I/O.
	AN4	AN	—	A/D Channel input.
	VREF+	AN	—	Positive Voltage Reference input.
	C1IN+	AN	—	Comparator positive input.
	C2IN+	AN	—	Comparator positive input.
	ICSPDAT	ST	CMOS	ICSP™ Data I/O.
RC1/AN5/C1IN1-/C2IN1-/ $\overline{\text{CWGFLT}}$/INT/ICSPCLK	RC1	TTL	CMOS	General purpose I/O.
	AN5	AN	—	A/D Channel input.
	C1IN1-	AN	—	Comparator negative input.
	C2IN1-	AN	—	Comparator negative input.
	$\overline{\text{CWGFLT}}$	ST	—	Complementary Waveform Generator Fault input.
	INT	ST	—	External input.
	ICSPCLK	ST	—	ICSP Programming Clock.
RC2/AN6/DACOUT1/ C1IN2-/C2IN2-	RC2	TTL	CMOS	General purpose I/O.
	AN6	AN	—	A/D Channel input.
	DACOUT1	—	AN	Digital-to-Analog Converter output.
	C1IN2-	AN	—	Comparator negative input.
	C2IN2-	AN	—	Comparator negative input.
RC3/AN7/DACOUT2/ C1IN3-/C2IN3-/CLKR(2)	RC3	TTL	CMOS	General purpose I/O.
	AN7	AN	—	A/D Channel input.
	DACOUT2	—	AN	Digital-to-Analog Converter output.
	C1IN3-	AN	—	Comparator negative input.
	C2IN3-	AN	—	Comparator negative input.
	CLKR	—	CMOS	Clock reference output.
RC4/C1OUT/C2OUT/ CWG1B	RC4	TTL	CMOS	General purpose I/O.
	C1OUT	—	CMOS	Comparator output.
	C2OUT	—	CMOS	Comparator output.
	CWG1B	—	CMOS	CWG complementary output.
RC5/T0CKI/CWG1A/PWM1	RC5	TTL	CMOS	General purpose I/O.
	T0CKI	ST	—	Timer0 clock input.
	CWG1A	—	CMOS	CWG complementary output.
	PWM1	—	CMOS	PWM output.
RC6/AN8/$\overline{\text{SS}}$(1)/PWM2	RC6	TTL	CMOS	General purpose I/O.
	AN8	AN	—	A/D Channel input.
	$\overline{\text{SS}}$	ST	—	Slave Select input.
	PWM2	—	CMOS	PWM output.
RC7/AN9/SDO	RC7	TTL	CMOS	General purpose I/O.
	AN9	AN	—	A/D Channel input.
	SDO	—	CMOS	SPI data output.
VDD	VDD	Power	—	Positive supply.
VSS	VSS	Power	—	Ground reference.
VUSB3V3	VUSB3V3	Power	—	Positive supply for USB transceiver.

Legend: AN = Analog input or output; CMOS = CMOS compatible input or output; OD = Open Drain; TTL = TTL compatible input; ST = Schmitt Trigger input with CMOS levels; I²C™ = Schmitt Trigger input with I²C levels; HV = High Voltage; XTAL = Crystal

Note 1: Default location for peripheral pin function. Alternate location can be selected using the APFCON register.

2: Alternate location for peripheral pin function selected by the APFCON register.

3: LVP support for PIC18(L)F1XK50 legacy designs.

 © 2012 Microchip Technology Inc.

2.0 ENHANCED MID-RANGE CPU

This family of devices contain an enhanced mid-range 8-bit CPU core. The CPU has 49 instructions. Interrupt capability includes automatic context saving. The hardware stack is 16 levels deep and has Overflow and Underflow Reset capability. Direct, Indirect, and Relative Addressing modes are available. Two File Select Registers (FSRs) provide the ability to read program and data memory.

- Automatic Interrupt Context Saving
- 16-level Stack with Overflow and Underflow
- File Select Registers
- Instruction Set

FIGURE 2-1: CORE BLOCK DIAGRAM

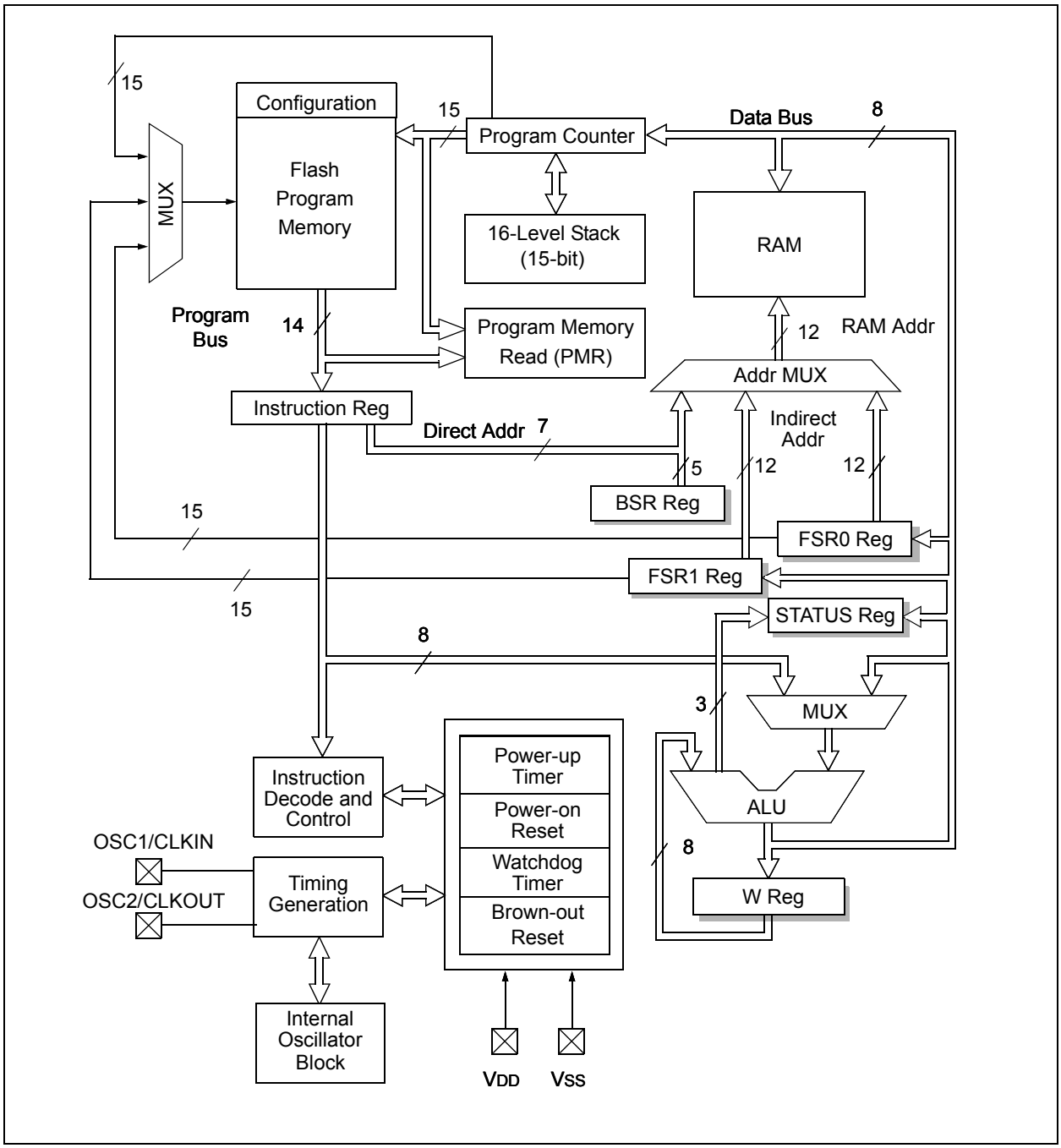

2.1 Automatic Interrupt Context Saving

During interrupts, certain registers are automatically saved in shadow registers and restored when returning from the interrupt. This saves stack space and user code. See **Section 8.5 "Automatic Context Saving"**, for more information.

2.2 16-Level Stack with Overflow and Underflow

These devices have an external stack memory 15 bits wide and 16 words deep. A Stack Overflow or Underflow will set the appropriate bit (STKOVF or STKUNF) in the PCON register, and if enabled will cause a software Reset. See section **Section 3.5 "Stack"** for more details.

2.3 File Select Registers

There are two 16-bit File Select Registers (FSR). FSRs can access all file registers and program memory, which allows one Data Pointer for all memory. When an FSR points to program memory, there is one additional instruction cycle in instructions using INDF to allow the data to be fetched. General purpose memory can now also be addressed linearly, providing the ability to access contiguous data larger than 80 bytes. There are also new instructions to support the FSRs. See **Section 3.6 "Indirect Addressing"** for more details.

2.4 Instruction Set

There are 49 instructions for the enhanced mid-range CPU to support the features of the CPU. See **Section 28.0 "Instruction Set Summary"** for more details.

 © 2012 Microchip Technology Inc.

3.0 MEMORY ORGANIZATION

These devices contain the following types of memory:

- Program Memory
  - Configuration Words
  - Device ID
  - User ID
  - Flash Program Memory
- Data Memory
  - Core Registers
  - Special Function Registers
  - Dual-Port General Purpose RAM
  - General Purpose RAM
  - Common RAM

The following features are associated with access and control of program memory and data memory:

- PCL and PCLATH
- Stack
- Indirect Addressing

3.1 Program Memory Organization

The enhanced mid-range core has a 15-bit program counter capable of addressing a 32K x 14 program memory space. Table 3-1 shows the memory sizes implemented. Accessing a location above these boundaries will cause a wrap-around within the implemented memory space. The Reset vector is at 0000h and the interrupt vector is at 0004h (See Figure 3-1).

TABLE 3-1: DEVICE SIZES AND ADDRESSES

Device	Program Memory Space (Words)	Last Program Memory Address	High-Endurance Flash Memory Address Range (1)
PIC16F1454 PIC16LF1454	8,192	1FFFh	1F80h-1FFFh
PIC16F1455 PIC16LF1455	8,192	1FFFh	1F80h-1FFFh
PIC16F1459 PIC16LF1459	8,192	1FFFh	1F80h-1FFFh

Note 1: High-endurance Flash applies to low byte of each address in the range.

FIGURE 3-1: PROGRAM MEMORY MAP AND STACK FOR PIC16(L)F1454/5/9

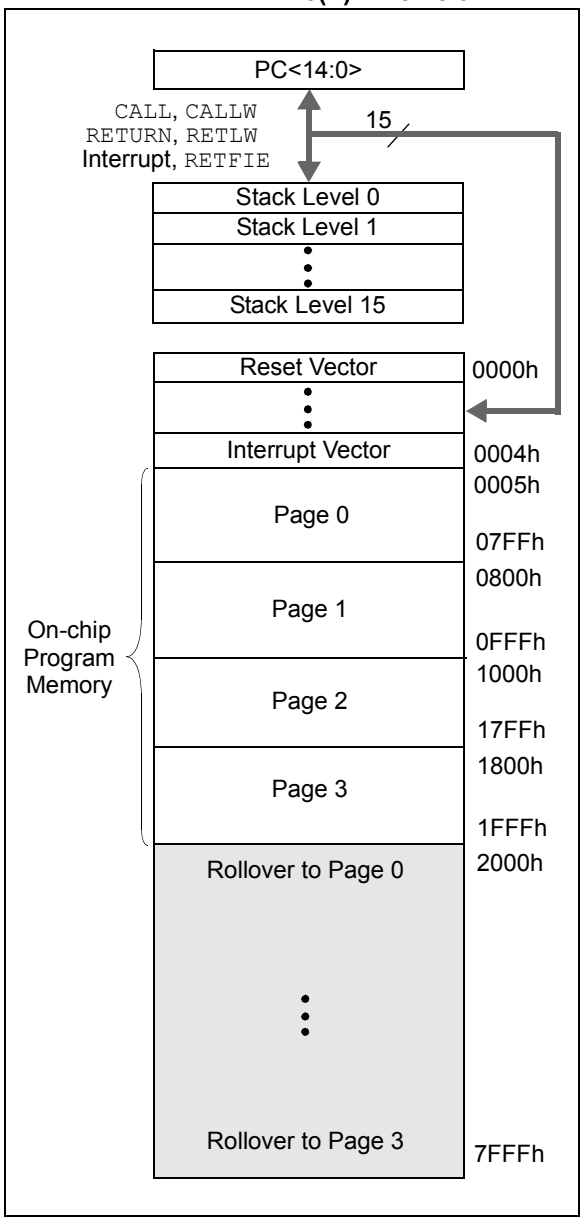

3.1.1 READING PROGRAM MEMORY AS DATA

There are two methods of accessing constants in program memory. The first method is to use tables of `RETLW` instructions. The second method is to set an FSR to point to the program memory.

3.1.1.1 `RETLW` Instruction

The `RETLW` instruction can be used to provide access to tables of constants. The recommended way to create such a table is shown in Example 3-1.

EXAMPLE 3-1: `RETLW` INSTRUCTION

```
constants
    BRW                 ;Add Index in W to
                        ;program counter to
                        ;select data
    RETLW DATA0         ;Index0 data
    RETLW DATA1         ;Index1 data
    RETLW DATA2
    RETLW DATA3


my_function
    ;… LOTS OF CODE…
    MOVLW       DATA_INDEX
    call constants
    ;… THE CONSTANT IS IN W
```

The `BRW` instruction makes this type of table very simple to implement. If your code must remain portable with previous generations of microcontrollers, then the `BRW` instruction is not available so the older table read method must be used.

 © 2012 Microchip Technology Inc.

3.1.1.2 Indirect Read with FSR

The program memory can be accessed as data by setting bit 7 of the FSRxH register and reading the matching INDFx register. The `MOVIW` instruction will place the lower eight bits of the addressed word in the W register. Writes to the program memory cannot be performed via the INDF registers. Instructions that access the program memory via the FSR require one extra instruction cycle to complete. Example 3-2 demonstrates accessing the program memory via an FSR.

The High directive will set bit<7> if a label points to a location in program memory.

EXAMPLE 3-2: ACCESSING PROGRAM MEMORY VIA FSR

```
constants
    RETLW DATA0        ;Index0 data
    RETLW DATA1        ;Index1 data
    RETLW DATA2
    RETLW DATA3
my_function
    ;… LOTS OF CODE…
    MOVLW   LOW constants
    MOVWF   FSR1L
    MOVLW   HIGH constants
    MOVWF   FSR1H
    MOVIW   0[FSR1]
;THE PROGRAM MEMORY IS IN W
```

3.2 Data Memory Organization

The data memory is partitioned in 32 memory banks with 128 bytes in a bank. Each bank consists of (Figure 3-2):

- 12 core registers
- 20 Special Function Registers (SFR)
- Up to 80 bytes of General Purpose RAM (GPR)
- Up to 80 bytes of Dual-Port General Purpose RAM (DPR)
- 16 bytes of common RAM

The active bank is selected by writing the bank number into the Bank Select Register (BSR). Unimplemented memory will read as '0'. All data memory can be accessed either directly (via instructions that use the file registers) or indirectly via the two File Select Registers (FSR). See **Section 3.6 "Indirect Addressing"** for more information.

Data memory uses a 12-bit address. The upper 7-bits of the address define the Bank address and the lower 5-bits select the registers/RAM in that bank.

3.2.1 CORE REGISTERS

The core registers contain the registers that directly affect the basic operation. The core registers occupy the first 12 addresses of every data memory bank (addresses x00h/x08h through x0Bh/x8Bh). These registers are listed below in Table 3-2. For detailed information, see Table 3-11.

TABLE 3-2: CORE REGISTERS

Addresses	BANKx
x00h or x80h	INDF0
x01h or x81h	INDF1
x02h or x82h	PCL
x03h or x83h	STATUS
x04h or x84h	FSR0L
x05h or x85h	FSR0H
x06h or x86h	FSR1L
x07h or x87h	FSR1H
x08h or x88h	BSR
x09h or x89h	WREG
x0Ah or x8Ah	PCLATH
x0Bh or x8Bh	INTCON

 © 2012 Microchip Technology Inc.

3.2.1.1 STATUS Register

The STATUS register, shown in Register 3-1, contains:

- the arithmetic status of the ALU
- the Reset status

The STATUS register can be the destination for any instruction, like any other register. If the STATUS register is the destination for an instruction that affects the Z, DC or C bits, then the write to these three bits is disabled. These bits are set or cleared according to the device logic. Furthermore, the $\overline{TO}$ and $\overline{PD}$ bits are not writable. Therefore, the result of an instruction with the STATUS register as destination may be different than intended.

For example, `CLRF STATUS` will clear the upper three bits and set the Z bit. This leaves the STATUS register as '`000u u1uu`' (where `u` = unchanged).

It is recommended, therefore, that only `BCF`, `BSF`, `SWAPF` and `MOVWF` instructions are used to alter the STATUS register, because these instructions do not affect any Status bits. For other instructions not affecting any Status bits (Refer to **Section 28.0 "Instruction Set Summary"**).

> **Note 1:** The C and DC bits operate as $\overline{\text{Borrow}}$ and $\overline{\text{Digit Borrow}}$ out bits, respectively, in subtraction.

3.3 Register Definitions: Status

REGISTER 3-1: STATUS: STATUS REGISTER

U-0	U-0	U-0	R-1/q	R-1/q	R/W-0/u	R/W-0/u	R/W-0/u
—	—	—	$\overline{TO}$	$\overline{PD}$	Z	DC(1)	C(1)
bit 7							bit 0

Legend:		
R = Readable bit	W = Writable bit	U = Unimplemented bit, read as '0'
u = Bit is unchanged	x = Bit is unknown	-n/n = Value at POR and BOR/Value at all other Resets
'1' = Bit is set	'0' = Bit is cleared	q = Value depends on condition

bit 7-5 **Unimplemented:** Read as '`0`'

bit 4 **$\overline{TO}$:** Time-Out bit
`1` = After power-up, `CLRWDT` instruction or `SLEEP` instruction
`0` = A WDT time-out occurred

bit 3 **$\overline{PD}$:** Power-Down bit
`1` = After power-up or by the `CLRWDT` instruction
`0` = By execution of the `SLEEP` instruction

bit 2 **Z:** Zero bit
`1` = The result of an arithmetic or logic operation is zero
`0` = The result of an arithmetic or logic operation is not zero

bit 1 **DC:** Digit Carry/$\overline{\text{Digit Borrow}}$ bit (`ADDWF`, `ADDLW`, `SUBLW`, `SUBWF` instructions)(1)
`1` = A carry-out from the 4th low-order bit of the result occurred
`0` = No carry-out from the 4th low-order bit of the result

bit 0 **C:** Carry/$\overline{\text{Borrow}}$ bit(1) (`ADDWF`, `ADDLW`, `SUBLW`, `SUBWF` instructions)(1)
`1` = A carry-out from the Most Significant bit of the result occurred
`0` = No carry-out from the Most Significant bit of the result occurred

Note 1: For $\overline{\text{Borrow}}$, the polarity is reversed. A subtraction is executed by adding the two's complement of the second operand. For rotate (`RRF`, `RLF`) instructions, this bit is loaded with either the high-order or low-order bit of the source register.

3.3.1 SPECIAL FUNCTION REGISTER

The Special Function Registers are registers used by the application to control the desired operation of peripheral functions in the device. The Special Function Registers occupy the 20 bytes after the core registers of every data memory bank (addresses x0Ch/x8Ch through x1Fh/x9Fh). The registers associated with the operation of the peripherals are described in the appropriate peripheral chapter of this data sheet.

3.3.2 GENERAL PURPOSE RAM

There are up to 80 bytes of GPR in each data memory bank. The Special Function Registers occupy the 20 bytes after the core registers of every data memory bank (addresses x0Ch/x8Ch through x1Fh/x9Fh).

3.3.2.1 Linear Access to GPR

The general purpose RAM can be accessed in a non-banked method via the FSRs. This can simplify access to large memory structures. See **Section 3.6.2 "Linear Data Memory"** for more information.

Refer to Table 3-3 for Dual Port and USB addressing information.

3.3.3 DUAL-PORT RAM

Part of the data memory is mapped to a special dual access RAM. When the USB module is disabled, the GPRs in these banks are used like any other GPR in the data memory space.

When the USB module is enabled, the memory in these banks is allocated as buffer RAM for USB operation. This area is shared between the microcontroller core and the USB Serial Interface Engine (SIE) and is used to transfer data directly between the two.

It is theoretically possible to use the areas of USB RAM that are not allocated as USB buffers for normal scratchpad memory or other variable storage. In practice, the dynamic nature of buffer allocation makes this risky at best. Additional information on USB RAM and buffer operation is provided in **Section 26.0 "Universal Serial Bus (USB)"**.

3.3.4 COMMON RAM

There are 16 bytes of common RAM accessible from all banks.

TABLE 3-3: DUAL PORT RAM ADDRESSING

Port 0		Port 1	
CPU Banked Address	**CPU Linear Address**	**USB Banked Address**	**USB Linear Address**
020 - 06F	2000 - 204F	020 - 06F	2000 - 204F
0A0 - 0EF	2050 - 209F	0A0 - 0EF	2050 - 209F
120 - 16F	20A0 - 20EF	120 - 16F	20A0 - 20EF
1A0 - 1EF	20F0 - 213F	1A0 - 1EF	20F0 - 213F
220 - 26F	2140 - 218F	220 - 26F	2140 - 218F
2A0 - 2EF	2190 - 21DF	2A0 - 2EF	2190 - 21DF
320 - 32F	21E0 - 21EF	320 - 32F	21E0 - 21EF
370 - 37F	**(1)**	370 - 37F	**(1)**

Note 1: Accessible from banked memory only.

 © 2012 Microchip Technology Inc.

FIGURE 3-2: BANKED MEMORY PARTITIONING

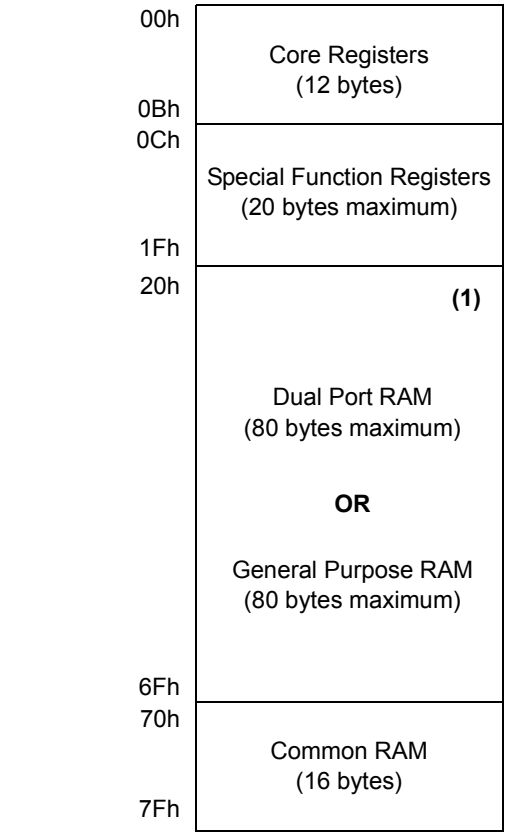

Note 1: If the USB module is disabled, data memory is GPR. If enabled, data memory can be DPR. Refer to Memory Map for RAM type details.

3.3.5 DEVICE MEMORY MAPS

The memory maps for PIC16(L)F1454/5/9 are as shown in Table 3-8 and Table 3-9.

TABLE 3-4: PIC16(L)F1454 MEMORY MAP, BANK 0-7

	BANK 0		BANK 1		BANK 2		BANK 3		BANK 4		BANK 5		BANK 6		BANK 7
000h	Core Registers (Table 3-2)	080h	Core Registers (Table 3-2)	100h	Core Registers (Table 3-2)	180h	Core Registers (Table 3-2)	200h	Core Registers (Table 3-2)	280h	Core Registers (Table 3-2)	300h	Core Registers (Table 3-2)	380h	Core Registers (Table 3-2)
00Bh		08Bh		10Bh		18Bh		20Bh		28Bh		30Bh		38Bh	
00Ch	PORTA	08Ch	TRISA	10Ch	LATA	18Ch	—	20Ch	WPUA	28Ch	—	30Ch	—	38Ch	—
00Dh	—	08Dh	—	10Dh	—	18Dh	—	20Dh	—	28Dh	—	30Dh	—	38Dh	—
00Eh	PORTC	08Eh	TRISC	10Eh	LATC	18Eh	—	20Eh	—	28Eh	—	30Eh	—	38Eh	—
00Fh	—	08Fh	—	10Fh	—	18Fh	—	20Fh	—	28Fh	—	30Fh	—	38Fh	—
010h	—	090h	—	110h	—	190h	—	210h	—	290h	—	310h	—	390h	—
011h	PIR1	091h	PIE1	111h	—	191h	PMADRL	211h	SSP1BUF	291h	—	311h	—	391h	IOCAP
012h	PIR2	092h	PIE2	112h	—	192h	PMADRH	212h	SSP1ADD	292h	—	312h	—	392h	IOCAN
013h	—	093h	—	113h	—	193h	PMDATL	213h	SSP1MSK	293h	—	313h	—	393h	IOCAF
014h	—	094h	—	114h	—	194h	PMDATH	214h	SSP1STAT	294h	—	314h	—	394h	—
015h	TMR0	095h	OPTION_REG	115h	—	195h	PMCON1	215h	SSP1CON1	295h	—	315h	—	395h	—
016h	TMR1L	096h	PCON	116h	BORCON	196h	PMCON2	216h	SSP1CON2	296h	—	316h	—	396h	—
017h	TMR1H	097h	WDTCON	117h	—	197h	VREGCON	217h	SSP1CON3	297h	—	317h	—	397h	—
018h	T1CON	098h	OSCTUNE	118h	—	198h	—	218h	—	298h	—	318h	—	398h	—
019h	T1GCON	099h	OSCCON	119h	—	199h	RCREG	219h	—	299h	—	319h	—	399h	—
01Ah	TMR2	09Ah	OSCSTAT	11Ah	—	19Ah	TXREG	21Ah	—	29Ah	—	31Ah	—	39Ah	CLKRCON
01Bh	PR2	09Bh	—	11Bh	—	19Bh	SPBRG	21Bh	—	29Bh	—	31Bh	—	39Bh	CRCON
01Ch	T2CON	09Ch	—	11Ch	—	19Ch	SPBRGH	21Ch	—	29Ch	—	31Ch	—	39Ch	—
01Dh	—	09Dh	—	11Dh	APFCON	19Dh	RCSTA	21Dh	—	29Dh	—	31Dh	—	39Dh	—
01Eh	—	09Eh	—	11Eh	—	19Eh	TXSTA	21Eh	—	29Eh	—	31Eh	—	39Eh	—
01Fh	—	09Fh	—	11Fh	—	19Fh	BAUDCON	21Fh	—	29Fh	—	31Fh	—	39Fh	—
020h	Dual-Port General Purpose Register 80 Bytes	0A0h	Dual-Port General Purpose Register 80 Bytes	120h	Dual-Port General Purpose Register 80 Bytes	1A0h	Dual-Port General Purpose Register 80 Bytes	220h	Dual-Port General Purpose Register 80 Bytes	2A0h	Dual-Port General Purpose Register 80 Bytes	320h	Dual-Port General Purpose Register 16Bytes	3A0h	General Purpose Register 80 Bytes
06Fh		0EFh		16Fh		1EFh		26Fh		2EFh		32Fh		3EFh	
												330h	General Purpose Register 64 Bytes		
070h	Dual-Port Common RAM	0F0h	Common RAM (Accesses 70h – 7Fh)	170h	Common RAM (Accesses 70h – 7Fh)	1F0h	Common RAM (Accesses 70h – 7Fh)	270h	Common RAM (Accesses 70h – 7Fh)	2F0h	Common RAM (Accesses 70h – 7Fh)	370h	Common RAM (Accesses 70h – 7Fh)	3F0h	Common RAM (Accesses 70h – 7Fh)
07Fh		0FFh		17Fh		1FFh		27Fh		2FFh		37Fh		3FFh	

Legend: = Unimplemented data memory locations, read as '0'.

Preliminary

© 2012 Microchip Technology Inc.

TABLE 3-5: PIC16(L)F1455 MEMORY MAP, BANK 0-7

	BANK 0		BANK 1		BANK 2		BANK 3		BANK 4		BANK 5		BANK 6		BANK 7
000h	Core Registers (Table 3-2)	080h	Core Registers (Table 3-2)	100h	Core Registers (Table 3-2)	180h	Core Registers (Table 3-2)	200h	Core Registers (Table 3-2)	280h	Core Registers (Table 3-2)	300h	Core Registers (Table 3-2)	380h	Core Registers (Table 3-2)
00Bh		08Bh		10Bh		18Bh		20Bh		28Bh		30Bh		38Bh	
00Ch	PORTA	08Ch	TRISA	10Ch	LATA	18Ch	ANSELA	20Ch	WPUA	28Ch	—	30Ch	—	38Ch	—
00Dh	—	08Dh	—	10Dh	—	18Dh	—	20Dh	—	28Dh	—	30Dh	—	38Dh	—
00Eh	PORTC	08Eh	TRISC	10Eh	LATC	18Eh	ANSELC	20Eh	—	28Eh	—	30Eh	—	38Eh	—
00Fh	—	08Fh	—	10Fh	—	18Fh	—	20Fh	—	28Fh	—	30Fh	—	38Fh	—
010h	—	090h	—	110h	—	190h	—	210h	—	290h	—	310h	—	390h	—
011h	PIR1	091h	PIE1	111h	CM1CON0	191h	PMADRL	211h	SSP1BUF	291h	—	311h	—	391h	IOCAP
012h	PIR2	092h	PIE2	112h	CM1CON1	192h	PMADRH	212h	SSP1ADD	292h	—	312h	—	392h	IOCAN
013h	—	093h	—	113h	CM2CON0	193h	PMDATL	213h	SSP1MSK	293h	—	313h	—	393h	IOCAF
014h	—	094h	—	114h	CM2CON1	194h	PMDATH	214h	SSP1STAT	294h	—	314h	—	394h	—
015h	TMR0	095h	OPTION_REG	115h	CMOUT	195h	PMCON1	215h	SSP1CON1	295h	—	315h	—	395h	—
016h	TMR1L	096h	PCON	116h	BORCON	196h	PMCON2	216h	SSP1CON2	296h	—	316h	—	396h	—
017h	TMR1H	097h	WDTCON	117h	FVRCON	197h	VREGCON	217h	SSP1CON3	297h	—	317h	—	397h	—
018h	T1CON	098h	OSCTUNE	118h	DACCON0	198h	—	218h	—	298h	—	318h	—	398h	—
019h	T1GCON	099h	OSCCON	119h	DACCON1	199h	RCREG	219h	—	299h	—	319h	—	399h	—
01Ah	TMR2	09Ah	OSCSTAT	11Ah	—	19Ah	TXREG	21Ah	—	29Ah	—	31Ah	—	39Ah	CLKRCON
01Bh	PR2	09Bh	ADRESL	11Bh	—	19Bh	SPBRG	21Bh	—	29Bh	—	31Bh	—	39Bh	CRCON
01Ch	T2CON	09Ch	ADRESH	11Ch	—	19Ch	SPBRGH	21Ch	—	29Ch	—	31Ch	—	39Ch	—
01Dh	—	09Dh	ADCON0	11Dh	APFCON	19Dh	RCSTA	21Dh	—	29Dh	—	31Dh	—	39Dh	—
01Eh	—	09Eh	ADCON1	11Eh	—	19Eh	TXSTA	21Eh	—	29Eh	—	31Eh	—	39Eh	—
01Fh	—	09Fh	ADCON2	11Fh	—	19Fh	BAUDCON	21Fh	—	29Fh	—	31Fh	—	39Fh	—
020h	Dual-Port General Purpose Register 80 Bytes	0A0h	Dual-Port General Purpose Register 80 Bytes	120h	Dual-Port General Purpose Register 80 Bytes	1A0h	Dual-Port General Purpose Register 80 Bytes	220h	Dual-Port General Purpose Register 80 Bytes	2A0h	Dual-Port General Purpose Register 80 Bytes	320h	Dual-Port General Purpose Register 16Bytes	3A0h	General Purpose Register 80 Bytes
06Fh		0EFh		16Fh		1EFh		26Fh		2EFh		32Fh		3EFh	
070h	Dual-Port Common RAM	0F0h	Common RAM (Accesses 70h – 7Fh)	170h	Common RAM (Accesses 70h – 7Fh)	1F0h	Common RAM (Accesses 70h – 7Fh)	270h	Common RAM (Accesses 70h – 7Fh)	2F0h	Common RAM (Accesses 70h – 7Fh)	330h	General Purpose Register 64 Bytes	3F0h	Common RAM (Accesses 70h – 7Fh)
07Fh		0FFh		17Fh		1FFh		27Fh		2FFh		36Fh		3FFh	
												370h			
												37Fh			

Legend: = Unimplemented data memory locations, read as '0'.

© 2012 Microchip Technology Inc.

TABLE 3-6: PIC16(L)F1459 MEMORY MAP, BANK 0-7

	BANK 0		BANK 1		BANK 2		BANK 3		BANK 4		BANK 5		BANK 6		BANK 7
000h	Core Registers (Table 3-2)	080h	Core Registers (Table 3-2)	100h	Core Registers (Table 3-2)	180h	Core Registers (Table 3-2)	200h	Core Registers (Table 3-2)	280h	Core Registers (Table 3-2)	300h	Core Registers (Table 3-2)	380h	Core Registers (Table 3-2)
00Bh		08Bh		10Bh		18Bh		20Bh		28Bh		30Bh		38Bh	
00Ch	PORTA	08Ch	TRISA	10Ch	LATA	18Ch	ANSELA	20Ch	WPUA	28Ch	—	30Ch	—	38Ch	—
00Dh	PORTB	08Dh	TRISB	10Dh	LATB	18Dh	ANSELB	20Dh	WPUB	28Dh	—	30Dh	—	38Dh	—
00Eh	PORTC	08Eh	TRISC	10Eh	LATC	18Eh	ANSELC	20Eh	—	28Eh	—	30Eh	—	38Eh	—
00Fh	—	08Fh	—	10Fh	—	18Fh	—	20Fh	—	28Fh	—	30Fh	—	38Fh	—
010h	—	090h	—	110h	—	190h	—	210h	—	290h	—	310h	—	390h	—
011h	PIR1	091h	PIE1	111h	CM1CON0	191h	PMADRL	211h	SSP1BUF	291h	—	311h	—	391h	IOCAP
012h	PIR2	092h	PIE2	112h	CM1CON1	192h	PMADRH	212h	SSP1ADD	292h	—	312h	—	392h	IOCAN
013h	—	093h	—	113h	CM2CON0	193h	PMDATL	213h	SSP1MSK	293h	—	313h	—	393h	IOCAF
014h	—	094h	—	114h	CM2CON1	194h	PMDATH	214h	SSP1STAT	294h	—	314h	—	394h	IOCBP
015h	TMR0	095h	OPTION_REG	115h	CMOUT	195h	PMCON1	215h	SSP1CON1	295h	—	315h	—	395h	IOCBN
016h	TMR1L	096h	PCON	116h	BORCON	196h	PMCON2	216h	SSP1CON2	296h	—	316h	—	396h	IOCBF
017h	TMR1H	097h	WDTCON	117h	FVRCON	197h	VREGCON	217h	SSP1CON3	297h	—	317h	—	397h	—
018h	T1CON	098h	OSCTUNE	118h	DACCON0	198h	—	218h	—	298h	—	318h	—	398h	—
019h	T1GCON	099h	OSCCON	119h	DACCON1	199h	RCREG	219h	—	299h	—	319h	—	399h	—
01Ah	TMR2	09Ah	OSCSTAT	11Ah	—	19Ah	TXREG	21Ah	—	29Ah	—	31Ah	—	39Ah	CLKRCON
01Bh	PR2	09Bh	ADRESL	11Bh	—	19Bh	SPBRG	21Bh	—	29Bh	—	31Bh	—	39Bh	CRCON
01Ch	T2CON	09Ch	ADRESH	11Ch	—	19Ch	SPBRGH	21Ch	—	29Ch	—	31Ch	—	39Ch	—
01Dh	—	09Dh	ADCON0	11Dh	APFCON	19Dh	RCSTA	21Dh	—	29Dh	—	31Dh	—	39Dh	—
01Eh	—	09Eh	ADCON1	11Eh	—	19Eh	TXSTA	21Eh	—	29Eh	—	31Eh	—	39Eh	—
01Fh	—	09Fh	ADCON2	11Fh	—	19Fh	BAUDCON	21Fh	—	29Fh	—	31Fh	—	39Fh	—
020h	Dual-Port General Purpose Register 80 Bytes	0A0h	Dual-Port General Purpose Register 80 Bytes	120h	Dual-Port General Purpose Register 80 Bytes	1A0h	Dual-Port General Purpose Register 80 Bytes	220h	Dual-Port General Purpose Register 80 Bytes	2A0h	Dual-Port General Purpose Register 80 Bytes	320h	Dual-Port General Purpose Register 16Bytes	3A0h	General Purpose Register 80 Bytes
06Fh		0EFh		16Fh		1EFh		26Fh		2EFh		32Fh		3EFh	
070h	Dual-Port Common RAM	0F0h	Common RAM (Accesses 70h – 7Fh)	170h	Common RAM (Accesses 70h – 7Fh)	1F0h	Common RAM (Accesses 70h – 7Fh)	270h	Common RAM (Accesses 70h – 7Fh)	2F0h	Common RAM (Accesses 70h – 7Fh)	330h	General Purpose Register 64 Bytes	3F0h	Common RAM (Accesses 70h – 7Fh)
07Fh		0FFh		17Fh		1FFh		27Fh		2FFh		36Fh		3FFh	
												370h			
												37Fh			

Legend: = Unimplemented data memory locations, read as '0'.

Preliminary

© 2012 Microchip Technology Inc.

TABLE 3-7: PIC16(L)F1454 MEMORY MAP, BANK 8-23

	BANK 8		BANK 9		BANK 10		BANK 11		BANK 12		BANK 13		BANK 14		BANK 15
400h	Core Registers (Table 3-2)	480h	Core Registers (Table 3-2)	500h	Core Registers (Table 3-2)	580h	Core Registers (Table 3-2)	600h	Core Registers (Table 3-2)	680h	Core Registers (Table 3-2)	700h	Core Registers (Table 3-2)	780h	Core Registers (Table 3-2)
40Bh		48Bh		50Bh		58Bh		60Bh		68Bh		70Bh		78Bh	
40Ch	—	48Ch	—	50Ch	—	58Ch	—	60Ch	—	68Ch	—	70Ch	—	78Ch	—
40Dh	—	48Dh	—	50Dh	—	58Dh	—	60Dh	—	68Dh	—	70Dh	—	78Dh	—
40Eh	—	48Eh	—	50Eh	—	58Eh	—	60Eh	—	68Eh	—	70Eh	—	78Eh	—
40Fh	—	48Fh	—	50Fh	—	58Fh	—	60Fh	—	68Fh	—	70Fh	—	78Fh	—
410h	—	490h	—	510h	—	590h	—	610h	—	690h	—	710h	—	790h	—
411h	—	491h	—	511h	—	591h	—	611h	PWM1DCL	691h	—	711h	—	791h	—
412h	—	492h	—	512h	—	592h	—	612h	PWM1DCH	692h	—	712h	—	792h	—
413h	—	493h	—	513h	—	593h	—	613h	PWM1CON	693h	—	713h	—	793h	—
414h	—	494h	—	514h	—	594h	—	614h	PWM2DCL	694h	—	714h	—	794h	—
415h	—	495h	—	515h	—	595h	—	615h	PWM2DCH	695h	—	715h	—	795h	—
416h	—	496h	—	516h	—	596h	—	616h	PWM2CON	696h	—	716h	—	796h	—
417h	—	497h	—	517h	—	597h	—	617h	—	697h	—	717h	—	797h	—
418h	—	498h	—	518h	—	598h	—	618h	—	698h	—	718h	—	798h	—
419h	—	499h	—	519h	—	599h	—	619h	—	699h	—	719h	—	799h	—
41Ah	—	49Ah	—	51Ah	—	59Ah	—	61Ah	—	69Ah	—	71Ah	—	79Ah	—
41Bh	—	49Bh	—	51Bh	—	59Bh	—	61Bh	—	69Bh	—	71Bh	—	79Bh	—
41Ch	—	49Ch	—	51Ch	—	59Ch	—	61Ch	—	69Ch	—	71Ch	—	79Ch	—
41Dh	—	49Dh	—	51Dh	—	59Dh	—	61Dh	—	69Dh	—	71Dh	—	79Dh	—
41Eh	—	49Eh	—	51Eh	—	59Eh	—	61Eh	—	69Eh	—	71Eh	—	79Eh	—
41Fh	—	49Fh	—	51Fh	—	59Fh	—	61Fh	—	69Fh	—	71Fh	—	79Fh	—
420h	General Purpose Register 80 Bytes	4A0h	General Purpose Register 80 Bytes	520h	General Purpose Register 80 Bytes	5A0h	General Purpose Register 80 Bytes	620h	General Purpose Register 48 Bytes	6A0h	Unimplemented Read as '0'	720h	Unimplemented Read as '0'	7A0h	Unimplemented Read as '0'
46Fh		4EFh		56Fh		5EFh		64Fh		6EFh		76Fh		7EFh	
470h	Common RAM (Accesses 70h – 7Fh)	4F0h	Common RAM (Accesses 70h – 7Fh)	570h	Common RAM (Accesses 70h – 7Fh)	5F0h	Common RAM (Accesses 70h – 7Fh)	650h	Unimplemented Read as '0'	6F0h	Common RAM (Accesses 70h – 7Fh)	770h	Common RAM (Accesses 70h – 7Fh)	7F0h	Common RAM (Accesses 70h – 7Fh)
47Fh		4FFh		57Fh		5FFh		66Fh		6FFh		77Fh		7FFh	
								670h	Common RAM (Accesses 70h – 7Fh)						
								67Fh							

	BANK 16		BANK 17		BANK 18		BANK 19		BANK 20		BANK 21		BANK 22		BANK 23
800h	Core Registers (Table 3-2)	880h	Core Registers (Table 3-2)	900h	Core Registers (Table 3-2)	980h	Core Registers (Table 3-2)	A00h	Core Registers (Table 3-2)	A80h	Core Registers (Table 3-2)	B00h	Core Registers (Table 3-2)	B80h	Core Registers (Table 3-2)
80Bh		88Bh		90Bh		98Bh		A0Bh		A8Bh		B0Bh		B8Bh	
80Ch	Unimplemented Read as '0'	88Ch	Unimplemented Read as '0'	90Ch	Unimplemented Read as '0'	98Ch	Unimplemented Read as '0'	A0Ch	Unimplemented Read as '0'	A8Ch	Unimplemented Read as '0'	B0Ch	Unimplemented Read as '0'	B8Ch	Unimplemented Read as '0'
86Fh		8EFh		96Fh		9EFh		A6Fh		AEFh		B6Fh		BEFh	
870h	Common RAM (Accesses 70h – 7Fh)	8F0h	Common RAM (Accesses 70h – 7Fh)	970h	Common RAM (Accesses 70h – 7Fh)	9F0h	Common RAM (Accesses 70h – 7Fh)	A70h	Common RAM (Accesses 70h – 7Fh)	AF0h	Common RAM (Accesses 70h – 7Fh)	B70h	Common RAM (Accesses 70h – 7Fh)	BF0h	Common RAM (Accesses 70h – 7Fh)
87Fh		8FFh		97Fh		9FFh		A7Fh		AFFh		B7Fh		BFFh	

Legend: = Unimplemented data memory locations, read as '0'.

© 2012 Microchip Technology Inc.

TABLE 3-8: PIC16(L)F1455/9 MEMORY MAP, BANK 8-23

	BANK 8	BANK 9	BANK 10	BANK 11	BANK 12	BANK 13	BANK 14	BANK 15
400h	Core Registers (Table 3-2)	Core Registers (Table 3-2)	Core Registers (Table 3-2)	Core Registers (Table 3-2)	Core Registers (Table 3-2)	Core Registers (Table 3-2)	Core Registers (Table 3-2)	Core Registers (Table 3-2)
40Bh								
40Ch	—	—	—	—	—	—	—	—
40Dh	—	—	—	—	—	—	—	—
40Eh	—	—	—	—	—	—	—	—
40Fh	—	—	—	—	—	—	—	—
410h	—	—	—	—	—	—	—	—
411h	—	—	—	—	PWM1DCL	CWG1DBR	—	—
412h	—	—	—	—	PWM1DCH	CWG1DBF	—	—
413h	—	—	—	—	PWM1CON	CWG1CON0	—	—
414h	—	—	—	—	PWM2DCL	CWG1CON1	—	—
415h	—	—	—	—	PWM2DCH	CWG1CON2	—	—
416h	—	—	—	—	PWM2CON	—	—	—
417h	—	—	—	—	—	—	—	—
418h	—	—	—	—	—	—	—	—
419h	—	—	—	—	—	—	—	—
41Ah	—	—	—	—	—	—	—	—
41Bh	—	—	—	—	—	—	—	—
41Ch	—	—	—	—	—	—	—	—
41Dh	—	—	—	—	—	—	—	—
41Eh	—	—	—	—	—	—	—	—
41Fh	—	—	—	—	—	—	—	—
420h	General Purpose Register 80 Bytes	General Purpose Register 80 Bytes	General Purpose Register 80 Bytes	General Purpose Register 80 Bytes	General Purpose Register 48 Bytes	Unimplemented Read as '0'	Unimplemented Read as '0'	Unimplemented Read as '0'
46Fh					64Fh			
470h	Common RAM (Accesses 70h – 7Fh)	Common RAM (Accesses 70h – 7Fh)	Common RAM (Accesses 70h – 7Fh)	Common RAM (Accesses 70h – 7Fh)	650h Unimplemented Read as '0'	Common RAM (Accesses 70h – 7Fh)	Common RAM (Accesses 70h – 7Fh)	Common RAM (Accesses 70h – 7Fh)
47Fh					66Fh			

	BANK 16	BANK 17	BANK 18	BANK 19	BANK 20	BANK 21	BANK 22	BANK 23
800h	Core Registers (Table 3-2)	Core Registers (Table 3-2)	Core Registers (Table 3-2)	Core Registers (Table 3-2)	Core Registers (Table 3-2)	Core Registers (Table 3-2)	Core Registers (Table 3-2)	Core Registers (Table 3-2)
80Bh								
80Ch	Unimplemented Read as '0'	Unimplemented Read as '0'	Unimplemented Read as '0'	Unimplemented Read as '0'	Unimplemented Read as '0'	Unimplemented Read as '0'	Unimplemented Read as '0'	Unimplemented Read as '0'
86Fh								
870h	Common RAM (Accesses 70h – 7Fh)	Common RAM (Accesses 70h – 7Fh)	Common RAM (Accesses 70h – 7Fh)	Common RAM (Accesses 70h – 7Fh)	Common RAM (Accesses 70h – 7Fh)	Common RAM (Accesses 70h – 7Fh)	Common RAM (Accesses 70h – 7Fh)	Common RAM (Accesses 70h – 7Fh)
87Fh								

Legend: = Unimplemented data memory locations, read as '0'.

Preliminary

© 2012 Microchip Technology Inc.

TABLE 3-9: PIC16(L)F1454/5/9 MEMORY MAP, BANK 24-31

	BANK 24		BANK 25		BANK 26		BANK 27		BANK 28		BANK 29		BANK 30		BANK 31
C00h	Core Registers (Table 3-2)	C80h	Core Registers (Table 3-2)	D00h	Core Registers (Table 3-2)	D80h	Core Registers (Table 3-2)	E00h	Core Registers (Table 3-2)	E80h	Core Registers (Table 3-2)	F00h	Core Registers (Table 3-2)	F80h	Core Registers (Table 3-2)
C0Bh		C8Bh		D0Bh		D8Bh		E0Bh		E8Bh		F0Bh		F8Bh	
C0Ch	—	C8Ch	—	D0Ch	—	D8Ch	—	E0Ch	—	E8Ch	—	F0Ch	—	F8Ch	See Table 3-10 for register mapping details
C0Dh	—	C8Dh	—	D0Dh	—	D8Dh	—	E0Dh	—	E8Dh	—	F0Dh	—	F8Dh	
C0Eh	—	C8Eh	—	D0Eh	—	D8Eh	—	E0Eh	—	E8Eh	UCON	F0Eh	—	F8Eh	
C0Fh	—	C8Fh	—	D0Fh	—	D8Fh	—	E0Fh	—	E8Fh	USTAT	F0Fh	—	F8Fh	
C10h	—	C90h	—	D10h	—	D90h	—	E10h	—	E90h	UIR	F10h	—	F90h	
C11h	—	C91h	—	D11h	—	D91h	—	E11h	—	E91h	UCFG	F11h	—	F91h	
C12h	—	C92h	—	D12h	—	D92h	—	E12h	—	E92h	UIE	F12h	—	F92h	
C13h	—	C93h	—	D13h	—	D93h	—	E13h	—	E93h	UEIR	F13h	—	F93h	
C14h	—	C94h	—	D14h	—	D94h	—	E14h	—	E94h	UFRMH	F14h	—	F94h	
C15h	—	C95h	—	D15h	—	D95h	—	E15h	—	E95h	UFRML	F15h	—	F95h	
C16h	—	C96h	—	D16h	—	D96h	—	E16h	—	E96h	UADDR	F16h	—	F96h	
C17h	—	C97h	—	D17h	—	D97h	—	E17h	—	E97h	UEIE	F17h	—	F97h	
C18h	—	C98h	—	D18h	—	D98h	—	E18h	—	E98h	UEP0	F18h	—	F98h	
C19h	—	C99h	—	D19h	—	D99h	—	E19h	—	E99h	UEP1	F19h	—	F99h	
C1Ah	—	C9Ah	—	D1Ah	—	D9Ah	—	E1Ah	—	E9Ah	UEP2	F1Ah	—	F9Ah	
C1Bh	—	C9Bh	—	D1Bh	—	D9Bh	—	E1Bh	—	E9Bh	UEP3	F1Bh	—	F9Bh	
C1Ch	—	C9Ch	—	D1Ch	—	D9Ch	—	E1Ch	—	E9Ch	UEP4	F1Ch	—	F9Ch	
C1Dh	—	C9Dh	—	D1Dh	—	D9Dh	—	E1Dh	—	E9Dh	UEP5	F1Dh	—	F9Dh	
C1Eh	—	C9Eh	—	D1Eh	—	D9Eh	—	E1Eh	—	E9Eh	UEP6	F1Eh	—	F9Eh	
C1Fh	—	C9Fh	—	D1Fh	—	D9Fh	—	E1Fh	—	E9Fh	UEP7	F1Fh	—	F9Fh	
C20h	Unimplemented Read as '0'	CA0h	Unimplemented Read as '0'	D20h	Unimplemented Read as '0'	DA0h	Unimplemented Read as '0'	E20h	Unimplemented Read as '0'	EA0h	Unimplemented Read as '0'	F20h	Unimplemented Read as '0'	FA0h	
C6Fh		CEFh		D6Fh		DEFh		E6Fh		EEFh		F6Fh		FEFh	
C70h	Common RAM (Accesses 70h – 7Fh)	CF0h	Common RAM (Accesses 70h – 7Fh)	D70h	Common RAM (Accesses 70h – 7Fh)	DF0h	Common RAM (Accesses 70h – 7Fh)	E70h	Common RAM (Accesses 70h – 7Fh)	EF0h	Common RAM (Accesses 70h – 7Fh)	F70h	Common RAM (Accesses 70h – 7Fh)	FF0h	Common RAM (Accesses 70h – 7Fh)
CFFh		CFFh		D7Fh		DFFh		E7Fh		EFFh		F7Fh		FFFh	

Legend: = Unimplemented data memory locations, read as '0'.

© 2012 Microchip Technology Inc.

TABLE 3-10: PIC16(L)F1454/5/9 MEMORY MAP, BANK 30-31

	Bank 31
F8Ch	Unimplemented Read as '0'
FE3h	
FE4h	STATUS_SHAD
FE5h	WREG_SHAD
FE6h	BSR_SHAD
FE7h	PCLATH_SHAD
FE8h	FSR0L_SHAD
FE9h	FSR0H_SHAD
FEAh	FSR1L_SHAD
FEBh	FSR1H_SHAD
FECh	—
FEDh	STKPTR
FEEh	TOSL
FEFh	TOSH

Legend: = Unimplemented data memory locations, read as '0'.

 © 2012 Microchip Technology Inc.

3.3.6 CORE FUNCTION REGISTERS SUMMARY

The Core Function registers listed in Table 3-11 can be addressed from any Bank.

TABLE 3-11: CORE FUNCTION REGISTERS SUMMARY

Addr	Name	Bit 7	Bit 6	Bit 5	Bit 4	Bit 3	Bit 2	Bit 1	Bit 0	Value on POR, BOR	Value on all other Resets
Bank 0-31											
x00h or x80h	INDF0	Addressing this location uses contents of FSR0H/FSR0L to address data memory (not a physical register)								xxxx xxxx	uuuu uuuu
x01h or x81h	INDF1	Addressing this location uses contents of FSR1H/FSR1L to address data memory (not a physical register)								xxxx xxxx	uuuu uuuu
x02h or x82h	PCL	Program Counter (PC) Least Significant Byte								0000 0000	0000 0000
x03h or x83h	STATUS	—	—	—	$\overline{TO}$	$\overline{PD}$	Z	DC	C	---1 1000	---q quuu
x04h or x84h	FSR0L	Indirect Data Memory Address 0 Low Pointer								0000 0000	uuuu uuuu
x05h or x85h	FSR0H	Indirect Data Memory Address 0 High Pointer								0000 0000	0000 0000
x06h or x86h	FSR1L	Indirect Data Memory Address 1 Low Pointer								0000 0000	uuuu uuuu
x07h or x87h	FSR1H	Indirect Data Memory Address 1 High Pointer								0000 0000	0000 0000
x08h or x88h	BSR	—	—	—	BSR<4:0>					---0 0000	---0 0000
x09h or x89h	WREG	Working Register								0000 0000	uuuu uuuu
x0Ah or x8Ah	PCLATH	—	Write Buffer for the upper 7 bits of the Program Counter							-000 0000	-000 0000
x0Bh or x8Bh	INTCON	GIE	PEIE	TMR0IE	INTE	IOCIE	TMR0IF	INTF	IOCIF	0000 0000	0000 0000

Legend: x = unknown, u = unchanged, q = value depends on condition, - = unimplemented, read as '0', r = reserved. Shaded locations are unimplemented, read as '0'.

TABLE 3-12: SPECIAL FUNCTION REGISTER SUMMARY

Address	Name	Bit 7	Bit 6	Bit 5	Bit 4	Bit 3	Bit 2	Bit 1	Bit 0	Value on POR, BOR	Value on all other Resets
Bank 0											
00Ch	PORTA	—	—	RA5	RA4	RA3	—	RA1	RA0	--xx x-xx	--xx x-xx
00Dh	PORTB(1)	RB7	RB6	RB5	RB4	—	—	—	—	xxxx ----	xxxx ----
00Eh	PORTC	RC7(1)	RC6(1)	RC5	RC4	RC3	RC2	RC1	RC0	xxxx xxxx	xxxx xxxx
00Fh	—	Unimplemented								—	—
010h	—	Unimplemented								—	—
011h	PIR1	TMR1GIF	ADIF	RCIF	TXIF	SSP1IF	—	TMR2IF	TMR1IF	0000 0-00	0000 0-00
012h	PIR2	OSFIF	C2IF	C1IF	—	BCL1IF	USBIF	ACTIF	—	000- 000-	000- 000-
013h	—	Unimplemented								—	—
014h	—	Unimplemented								—	—
015h	TMR0	Holding Register for the 8-bit Timer0 Count								xxxx xxxx	uuuu uuuu
016h	TMR1L	Holding Register for the Least Significant Byte of the 16-bit TMR1 Count								xxxx xxxx	uuuu uuuu
017h	TMR1H	Holding Register for the Most Significant Byte of the 16-bit TMR1 Count								xxxx xxxx	uuuu uuuu
018h	T1CON	TMR1CS<1:0>		T1CKPS<1:0>		T1OSCEN	$\overline{\text{T1SYNC}}$	—	TMR1ON	0000 00-0	uuuu uu-u
019h	T1GCON	TMR1GE	T1GPOL	T1GTM	T1GSPM	T1GGO/$\overline{\text{DONE}}$	T1GVAL	T1GSS<1:0>		0000 0x00	uuuu uxuu
01Ah	TMR2	Timer2 Module Register								0000 0000	0000 0000
01Bh	PR2	Timer2 Period Register								1111 1111	1111 1111
01Ch	T2CON	—	T2OUTPS<3:0>				TMR2ON	T2CKPS<1:0>		-000 0000	-000 0000
01Dh	—	Unimplemented								—	—
01Eh	—	Unimplemented								—	—
01Fh	—	Unimplemented								—	—
Bank 1											
08Ch	TRISA	—	—	TRISA5	TRISA4	—(2)	—	—(2)	—(2)	--11 ----	--11 ----
08Dh	TRISB(1)	TRISB7	TRISB6	TRISB5	TRISB4	—	—	—	—	1111 ----	1111 ----
08Eh	TRISC	TRISC7(1)	TRISC6(1)	TRISC5	TRISC4	TRISC3	TRISC2	TRISC1	TRISC0	1111 1111	1111 1111
08Fh	—	Unimplemented								—	—
090h	—	Unimplemented								—	—
091h	PIE1	TMR1GIE	ADIE	RCIE	TXIE	SSP1IE	—	TMR2IE	TMR1IE	0000 0-00	0000 0-00
092h	PIE2	OSFIE	C2IE	C1IE	—	BCL1IE	USBIE	ACTIE	—	000- 000-	000- 000-
093h	—	Unimplemented								—	—
094h	—	Unimplemented								—	—
095h	OPTION_REG	$\overline{\text{WPUEN}}$	INTEDG	TMR0CS	TMR0SE	PSA	PS<2:0>			1111 1111	1111 1111
096h	PCON	STKOVF	STKUNF	—	$\overline{\text{RWDT}}$	$\overline{\text{RMCLR}}$	$\overline{\text{RI}}$	$\overline{\text{POR}}$	$\overline{\text{BOR}}$	00-1 11qq	qq-q qquu
097h	WDTCON	—	—	WDTPS<4:0>					SWDTEN	--01 0110	--01 0110
098h	OSCTUNE	—	TUN<6:0>							-000 0000	-uuu uuuu
099h	OSCCON	SPLLEN	SPLLMULT	IRCF<3:0>				SCS<1:0>		0011 1100	0011 1100
09Ah	OSCSTAT	SOSCR	PLLRDY	OSTS	HFIOFR	—	—	LFIOFR	HFIOFS	00q0 --00	qqqq --qq
09Bh	ADRESL(2)	A/D Result Register Low								xxxx xxxx	uuuu uuuu
09Ch	ADRESH(2)	A/D Result Register High								xxxx xxxx	uuuu uuuu
09Dh	ADCON0(2)	—	CHS<4:0>					GO/$\overline{\text{DONE}}$	ADON	-000 0000	-000 0000
09Eh	ADCON1(2)	ADFM	ADCS<2:0>			—	—	ADPREF<1:0>		0000 --00	0000 --00
09Fh	ADCON2(2)	—	TRIGSEL<2:0>			—	—	—	—	-000 ----	-000 ----

Legend: x = unknown, u = unchanged, q = value depends on condition, - = unimplemented, r = reserved. Shaded locations are unimplemented, read as '0'.
Note 1: PIC16(L)F1459 only.
2: PIC16(L)F1455/9 only.
3: Unimplemented, read as '1'.

 © 2012 Microchip Technology Inc.

TABLE 3-12: SPECIAL FUNCTION REGISTER SUMMARY (CONTINUED)

Address	Name	Bit 7	Bit 6	Bit 5	Bit 4	Bit 3	Bit 2	Bit 1	Bit 0	Value on POR, BOR	Value on all other Resets
Bank 2											
10Ch	LATA	—	—	LATA5	LATA4	—	—	—	—	--xx ----	--uu ----
10Dh	LATB(1)	LATB7	LATB6	LATB5	LATB4	—	—	—	—	xxxx ----	uuuu ----
10Eh	LATC	LATC7(1)	LATC6(1)	LATC5	LATC4	LATC3	LATC2	LATC1	LATC0	xxxx xxxx	uuuu uuuu
10Fh	—	Unimplemented								—	—
110h	—	Unimplemented								—	—
111h	CM1CON0(2)	C1ON	C1OUT	C1OE	C1POL	—	C1SP	C1HYS	C1SYNC	0000 -100	0000 -100
112h	CM1CON1(2)	C1INTP	C1INTN	C1PCH<1:0>		—	C1NCH<2:0>			0000 -000	0000 -000
113h	CM2CON0(2)	C2ON	C2OUT	C2OE	C2POL	—	C2SP	C2HYS	C2SYNC	0000 -100	0000 -100
114h	CM2CON1(2)	C2INTP	C2INTN	C2PCH<1:0>		—	C2NCH<2:0>			0000 -000	0000 -000
115h	CMOUT(2)	—	—	—	—	—	—	MC2OUT	MC1OUT	---- --00	---- --00
116h	BORCON	SBOREN	BORFS	—	—	—	—	—	BORRDY	10-- ---q	uu-- ---u
117h	FVRCON(2)	FVREN	FVRRDY	TSEN	TSRNG	CDAFVR<1:0>		ADFVR<1:0>		0q00 0000	0q00 0000
118h	DACCON0(2)	DACEN	—	DACOE1	DACOE2	DACPSS<1:0>		—	—	0-00 00--	0-00 00--
119h	DACCON1(2)	—	—	—	DACR<4:0>					---0 0000	---0 0000
11Ah to 11Ch	—	Unimplemented								—	—
11Dh	APFCON	CLKRSEL	SDOSEL(1)	SSSEL	—	T1GSEL	P2SEL(1)	—	—	000- --00	000- --00
11Eh	—	Unimplemented								—	—
11Fh	—	Unimplemented								—	—
Bank 3											
18Ch	ANSELA(2)	—	—	—	ANSA4	—	—	—	—	---1 ----	---1 ----
18Dh	ANSELB(1)	—	—	ANSB5	ANSB4	—	—	—	—	--11 ----	--11 ----
18Eh	ANSELC(2)	ANSC7(1)	ANSC6(1)	—	—	ANSC3	ANSC2	ANSC1	ANSC0	11-- 1111	11-- 1111
18Fh	—	Unimplemented								—	—
190h	—	Unimplemented								—	—
191h	PMADRL	Flash Program Memory Address Register Low Byte								0000 0000	0000 0000
192h	PMADRH	—(2)	Flash Program Memory Address Register High Byte							1000 0000	1000 0000
193h	PMDATL	Flash Program Memory Read Data Register Low Byte								xxxx xxxx	uuuu uuuu
194h	PMDATH	—	—	Flash Program Memory Read Data Register High Byte						--xx xxxx	--uu uuuu
195h	PMCON1	—(2)	CFGS	LWLO	FREE	WRERR	WREN	WR	RD	1000 x000	1000 q000
196h	PMCON2	Flash Program Memory Control Register 2								0000 0000	0000 0000
197h	VREGCON(1)	—	—	—	—	—	—	VREGPM	Reserved	---- --01	---- --01
198h	—	Unimplemented								—	—
199h	RCREG	USART Receive Data Register								0000 0000	0000 0000
19Ah	TXREG	USART Transmit Data Register								0000 0000	0000 0000
19Bh	SPBRGL	Baud Rate Generator Data Register Low								0000 0000	0000 0000
19Ch	SPBRGH	Baud Rate Generator Data Register High								0000 0000	0000 0000
19Dh	RCSTA	SPEN	RX9	SREN	CREN	ADDEN	FERR	OERR	RX9D	0000 000x	0000 000x
19Eh	TXSTA	CSRC	TX9	TXEN	SYNC	SENDB	BRGH	TRMT	TX9D	0000 0010	0000 0010
19Fh	BAUDCON	ABDOVF	RCIDL	—	SCKP	BRG16	—	WUE	ABDEN	01-0 0-00	01-0 0-00

Legend: x = unknown, u = unchanged, q = value depends on condition, - = unimplemented, r = reserved. Shaded locations are unimplemented, read as '0'.
Note 1: PIC16(L)F1459 only.
2: PIC16(L)F1455/9 only.
3: Unimplemented, read as '1'.

TABLE 3-12: SPECIAL FUNCTION REGISTER SUMMARY (CONTINUED)

Address	Name	Bit 7	Bit 6	Bit 5	Bit 4	Bit 3	Bit 2	Bit 1	Bit 0	Value on POR, BOR	Value on all other Resets
Bank 4											
20Ch	WPUA	—	—	WPUA5	WPUA4	WPUA3	—	—	—	--11 1---	--11 1---
20Dh	WPUB(1)	WPUB7	WPUB6	WPUB5	WPUB4	—	—	—	—	1111 ----	1111 ----
20Eh to 210h	—	Unimplemented								—	—
211h	SSP1BUF	Synchronous Serial Port Receive Buffer/Transmit Register								xxxx xxxx	uuuu uuuu
212h	SSP1ADD	ADD<7:0>								0000 0000	0000 0000
213h	SSP1MSK	MSK<7:0>								1111 1111	1111 1111
214h	SSP1STAT	SMP	CKE	D/$\overline{A}$	P	S	R/$\overline{W}$	UA	BF	0000 0000	0000 0000
215h	SSP1CON1	WCOL	SSPOV	SSPEN	CKP	SSPM<3:0>				0000 0000	0000 0000
216h	SSP1CON2	GCEN	ACKSTAT	ACKDT	ACKEN	RCEN	PEN	RSEN	SEN	0000 0000	0000 0000
217h	SSP1CON3	ACKTIM	PCIE	SCIE	BOEN	SDAHT	SBCDE	AHEN	DHEN	0000 0000	0000 0000
218h to 21Fh	—	Unimplemented								—	—
Bank 5											
28Ch to 29Fh	—	Unimplemented								—	—
Bank 6											
30Ch to 31Fh	—	Unimplemented								—	—
Bank 7											
38Ch to 390h	—	Unimplemented								—	—
391h	IOCAP	—	—	IOCAP5	IOCAP4	IOCAP3	—	IOCAP1	IOCAP0	--00 0-00	--00 0-00
392h	IOCAN	—	—	IOCAN5	IOCAN4	IOCAN3	—	IOCAN1	IOCAN0	--00 0-00	--00 0-00
393h	IOCAF	—	—	IOCAF5	IOCAF4	IOCAF3	—	IOCAF1	IOCAF0	--00 0-00	--00 0-00
394h	IOCBP(1)	IOCBP7	IOCBP6	IOCBP5	IOCBP4	—	—	—	—	0000 ----	0000 ----
395h	IOCBN(1)	IOCBN7	IOCBN6	IOCBN5	IOCBN4	—	—	—	—	0000 ----	0000 ----
396h	IOCBF(1)	IOCBF7	IOCBF6	IOCBF5	IOCBF4	—	—	—	—	0000 ----	0000 ----
397h to 399h	—	Unimplemented								—	—
39Ah	CLKRCON	CLKREN	CLKROE	CLKRSLR	CLKRDC<1:0>		CLKRDIV<2:0>			0011 0000	0011 0000
39Bh	ACTCON	ACTEN	ACTUD	—	ACTSRC	ACTLOCK	—	ACTORS	—	00-0 0-0-	00-0 0-0-
39Ch to 39Fh	—	Unimplemented								—	—
Bank 8											
40Ch to 41Fh	—	Unimplemented								—	—
Bank 9											
48Ch to 49Fh	—	Unimplemented								—	—

Legend: x = unknown, u = unchanged, q = value depends on condition, - = unimplemented, r = reserved. Shaded locations are unimplemented, read as '0'.
Note 1: PIC16(L)F1459 only.
2: PIC16(L)F1455/9 only.
3: Unimplemented, read as '1'.

 © 2012 Microchip Technology Inc.

TABLE 3-12: SPECIAL FUNCTION REGISTER SUMMARY (CONTINUED)

Address	Name	Bit 7	Bit 6	Bit 5	Bit 4	Bit 3	Bit 2	Bit 1	Bit 0	Value on POR, BOR	Value on all other Resets
Bank 10											
50Ch to 51Fh	—	Unimplemented								—	—
Bank 11											
58Ch to 59Fh	—	Unimplemented								—	—
Bank 12											
60Ch to 610h	—	Unimplemented								—	—
611h	PWM1DCL	PWM1DCL<7:6>		—	—	—	—	—	—	00-- ----	00-- ----
612h	PWM1DCH	PWM1DCH<7:0>								xxxx xxxx	uuuu uuuu
613h	PWM1CON0	PWM1EN	PWM1OE	PWM1OUT	PWM1POL	—	—	—	—	0000 ----	0000 ----
614h	PWM2DCL	PWM2DCL<7:6>		—	—	—	—	—	—	00-- ----	00-- ----
615h	PWM2DCH	PWM2DCH<7:0>								xxxx xxxx	uuuu uuuu
616h	PWM2CON0	PWM2EN	PWM2OE	PWM2OUT	PWM2POL	—	—	—	—	0000 ----	0000 ----
617h to 61Fh	—	Unimplemented								—	—
Bank 13											
68Ch to 690h	—	Unimplemented								—	—
691h	CWG1DBR(2)	—	—	CWG1DBR<5:0>						--00 0000	--00 0000
692h	CWG1DBF(2)	—	—	CWG1DBF<5:0>						--xx xxxx	--xx xxxx
693h	CWG1CON0(2)	G1EN	G1OEB	G1OEA	G1POLB	G1POLA	—	—	G1CS0	0000 0--0	0000 0--0
694h	CWG1CON1(2)	G1ASDLB<1:0>		G1ASDLA<1:0>		—	—	G1IS<1:0>		0000 --00	0000 --00
695h	CWG1CON2(2)	G1ASE	G1ARSEN	—	—	G1ASDC2	G1ASDC1	G1ASDSFLT	—	00-- 0001	00-- 000-
696h to 69Fh	—	Unimplemented								—	—
Banks 14-28											
x0Ch/ x8Ch — x1Fh/ x9Fh	—	Unimplemented								—	—

Legend: x = unknown, u = unchanged, q = value depends on condition, - = unimplemented, r = reserved. Shaded locations are unimplemented, read as '0'.
Note 1: PIC16(L)F1459 only.
2: PIC16(L)F1455/9 only.
3: Unimplemented, read as '1'.

TABLE 3-12: SPECIAL FUNCTION REGISTER SUMMARY (CONTINUED)

Address	Name	Bit 7	Bit 6	Bit 5	Bit 4	Bit 3	Bit 2	Bit 1	Bit 0	Value on POR, BOR	Value on all other Resets
Bank 29											
E8Ch	—	Unimplemented								—	—
E8Dh	—	Unimplemented								—	—
E8Eh	UCON	—	PPBRST	SE0	PKTDIS	USBEN	RESUME	SUSPND	—	-0x0 000-	-0u0 000-
E8Fh	USTAT	—	ENDP<3:0>				DIR	PPBI	—	-xxx xxx-	-uuu uuu-
E90h	UIR	—	SOFIF	STALLIF	IDLEIF	TRNIF	ACTVIF	UERRIF	URSTIF	-000 0000	-000 0000
E91h	UCFG	UTEYE	Reserved	—	UPUEN	Reserved	FSEN	PPB<1:0>		00-0 -000	00-0 -000
E92h	UIE	—	SOFIE	STALLIE	IDLEIE	TRNIE	ACTVIE	UERRIE	URSTIE	-000 0000	-000 0000
E93h	UEIR	BTSEF	—	—	BTOEF	DFN8EF	CRC16EF	CRC5EF	PIDEF	0--0 -000	0--0 -000
E94h	UFRMH	—	—	—	—	—	FRM10	FRM9	FRM8	---- -xxx	---- -uuu
E95h	UFRML	FRM7	FRM6	FRM5	FRM4	FRM3	FRM2	FRM1	FRM0	xxxx xxxx	uuuu uuuu
E96h	UADDR	—	ADDR6	ADDR5	ADDR4	ADDR3	ADDR2	ADDR1	ADDR0	-000 0000	-000 0000
E97h	UEIE	BTSEE	—	—	BTOEE	DFN8EE	CRC16EE	CRC5EE	PIDEE	0--0 0000	0--0 0000
E98h	UEP7	–	–	–	EPHSHK	EPCONDIS	EPOUTEN	EPINEN	EPSTALL	---0 0000	---0 0000
E99h	UEP6	–	–	–	EPHSHK	EPCONDIS	EPOUTEN	EPINEN	EPSTALL	---0 0000	---0 0000
E9Ah	UEP5	–	–	–	EPHSHK	EPCONDIS	EPOUTEN	EPINEN	EPSTALL	---0 0000	---0 0000
E9Bh	UEP4	–	–	–	EPHSHK	EPCONDIS	EPOUTEN	EPINEN	EPSTALL	---0 0000	---0 0000
E9Ch	UEP3	–	–	–	EPHSHK	EPCONDIS	EPOUTEN	EPINEN	EPSTALL	---0 0000	---0 0000
E9Dh	UEP2	–	–	–	EPHSHK	EPCONDIS	EPOUTEN	EPINEN	EPSTALL	---0 0000	---0 0000
E9Eh	UEP1	–	–	–	EPHSHK	EPCONDIS	EPOUTEN	EPINEN	EPSTALL	---0 0000	---0 0000
E9Fh	UEP0	–	–	–	EPHSHK	EPCONDIS	EPOUTEN	EPINEN	EPSTALL	---0 0000	---0 0000
Bank 30											
F0Ch — F1Fh	—	Unimplemented								—	—

Legend: x = unknown, u = unchanged, q = value depends on condition, - = unimplemented, r = reserved. Shaded locations are unimplemented, read as '0'.
Note 1: PIC16(L)F1459 only.
2: PIC16(L)F1455/9 only.
3: Unimplemented, read as '1'.

 © 2012 Microchip Technology Inc.

TABLE 3-12: SPECIAL FUNCTION REGISTER SUMMARY (CONTINUED)

Address	Name	Bit 7	Bit 6	Bit 5	Bit 4	Bit 3	Bit 2	Bit 1	Bit 0	Value on POR, BOR	Value on all other Resets
Bank 31											
F8Ch — FE3h	—	Unimplemented								—	—
FE4h	STATUS_SHAD	—	—	—	—	—	Z_SHAD	DC_SHAD	C_SHAD	---- -xxx	---- -uuu
FE5h	WREG_SHAD	Working Register Shadow								xxxx xxxx	uuuu uuuu
FE6h	BSR_SHAD	—	—	—	Bank Select Register Shadow					---x xxxx	---u uuuu
FE7h	PCLATH_SHAD	—	Program Counter Latch High Register Shadow							-xxx xxxx	uuuu uuuu
FE8h	FSR0L_SHAD	Indirect Data Memory Address 0 Low Pointer Shadow								xxxx xxxx	uuuu uuuu
FE9h	FSR0H_SHAD	Indirect Data Memory Address 0 High Pointer Shadow								xxxx xxxx	uuuu uuuu
FEAh	FSR1L_SHAD	Indirect Data Memory Address 1 Low Pointer Shadow								xxxx xxxx	uuuu uuuu
FEBh	FSR1H_SHAD	Indirect Data Memory Address 1 High Pointer Shadow								xxxx xxxx	uuuu uuuu
FECh	—	Unimplemented								—	—
FEDh	STKPTR	—	—	—	Current Stack Pointer					---1 1111	---1 1111
FEEh	TOSL	Top-of-Stack Low byte								xxxx xxxx	uuuu uuuu
FEFh	TOSH	—	Top-of-Stack High byte							-xxx xxxx	-uuu uuuu

Legend: x = unknown, u = unchanged, q = value depends on condition, - = unimplemented, r = reserved. Shaded locations are unimplemented, read as '0'.
Note 1: PIC16(L)F1459 only.
2: PIC16(L)F1455/9 only.
3: Unimplemented, read as '1'.

3.4 PCL and PCLATH

The Program Counter (PC) is 15 bits wide. The low byte comes from the PCL register, which is a readable and writable register. The high byte (PC<14:8>) is not directly readable or writable and comes from PCLATH. On any Reset, the PC is cleared. Figure 3-3 shows the five situations for the loading of the PC.

FIGURE 3-3: LOADING OF PC IN DIFFERENT SITUATIONS

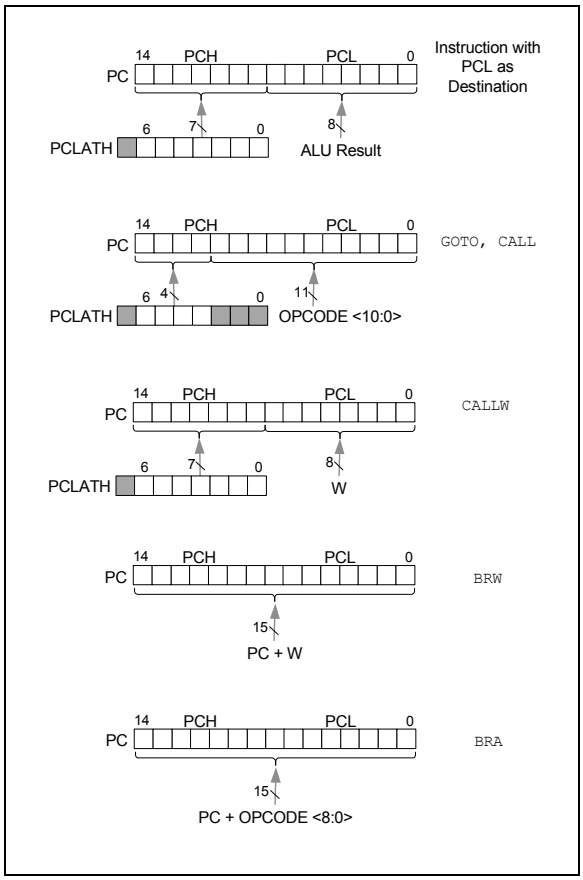

3.4.1 MODIFYING PCL

Executing any instruction with the PCL register as the destination simultaneously causes the Program Counter PC<14:8> bits (PCH) to be replaced by the contents of the PCLATH register. This allows the entire contents of the program counter to be changed by writing the desired upper seven bits to the PCLATH register. When the lower eight bits are written to the PCL register, all 15 bits of the program counter will change to the values contained in the PCLATH register and those being written to the PCL register.

3.4.2 COMPUTED GOTO

A computed GOTO is accomplished by adding an offset to the program counter (ADDWF PCL). When performing a table read using a computed GOTO method, care should be exercised if the table location crosses a PCL memory boundary (each 256-byte block). Refer to Application Note AN556, *"Implementing a Table Read"* (DS00556).

3.4.3 COMPUTED FUNCTION CALLS

A computed function CALL allows programs to maintain tables of functions and provide another way to execute state machines or look-up tables. When performing a table read using a computed function CALL, care should be exercised if the table location crosses a PCL memory boundary (each 256-byte block).

If using the CALL instruction, the PCH<2:0> and PCL registers are loaded with the operand of the CALL instruction. PCH<6:3> is loaded with PCLATH<6:3>.

The CALLW instruction enables computed calls by combining PCLATH and W to form the destination address. A computed CALLW is accomplished by loading the W register with the desired address and executing CALLW. The PCL register is loaded with the value of W and PCH is loaded with PCLATH.

3.4.4 BRANCHING

The branching instructions add an offset to the PC. This allows relocatable code and code that crosses page boundaries. There are two forms of branching, BRW and BRA. The PC will have incremented to fetch the next instruction in both cases. When using either branching instruction, a PCL memory boundary may be crossed.

If using BRW, load the W register with the desired unsigned address and execute BRW. The entire PC will be loaded with the address PC + 1 + W.

If using BRA, the entire PC will be loaded with PC + 1 +, the signed value of the operand of the BRA instruction.

 © 2012 Microchip Technology Inc.

3.5 Stack

All devices have a 16-level x 15-bit wide hardware stack (refer to Figures 3-4 through 3-7). The stack space is not part of either program or data space. The PC is PUSHed onto the stack when `CALL` or `CALLW` instructions are executed or an interrupt causes a branch. The stack is POPed in the event of a `RETURN`, `RETLW` or a `RETFIE` instruction execution. PCLATH is not affected by a PUSH or POP operation.

The stack operates as a circular buffer if the STVREN bit is programmed to '`0`'(Configuration Words). This means that after the stack has been PUSHed sixteen times, the seventeenth PUSH overwrites the value that was stored from the first PUSH. The eighteenth PUSH overwrites the second PUSH (and so on). The STKOVF and STKUNF flag bits will be set on an Overflow/Underflow, regardless of whether the Reset is enabled.

Note 1:	There are no instructions/mnemonics called PUSH or POP. These are actions that occur from the execution of the `CALL`, `CALLW`, `RETURN`, `RETLW` and `RETFIE` instructions or the vectoring to an interrupt address.

3.5.1 ACCESSING THE STACK

The stack is available through the TOSH, TOSL and STKPTR registers. STKPTR is the current value of the Stack Pointer. TOSH:TOSL register pair points to the TOP of the stack. Both registers are read/writable. TOS is split into TOSH and TOSL due to the 15-bit size of the PC. To access the stack, adjust the value of STKPTR, which will position TOSH:TOSL, then read/write to TOSH:TOSL. STKPTR is five bits to allow detection of overflow and underflow.

Note:	Care should be taken when modifying the STKPTR while interrupts are enabled.

During normal program operation, `CALL`, `CALLW` and Interrupts will increment STKPTR while `RETLW`, `RETURN`, and `RETFIE` will decrement STKPTR. At any time STKPTR can be inspected to see how much stack is left. The STKPTR always points at the currently used place on the stack. Therefore, a `CALL` or `CALLW` will increment the STKPTR and then write the PC, and a return will unload the PC and then decrement the STKPTR.

Reference Figure 3-4 through Figure 3-7 for examples of accessing the stack.

FIGURE 3-4: ACCESSING THE STACK EXAMPLE 1

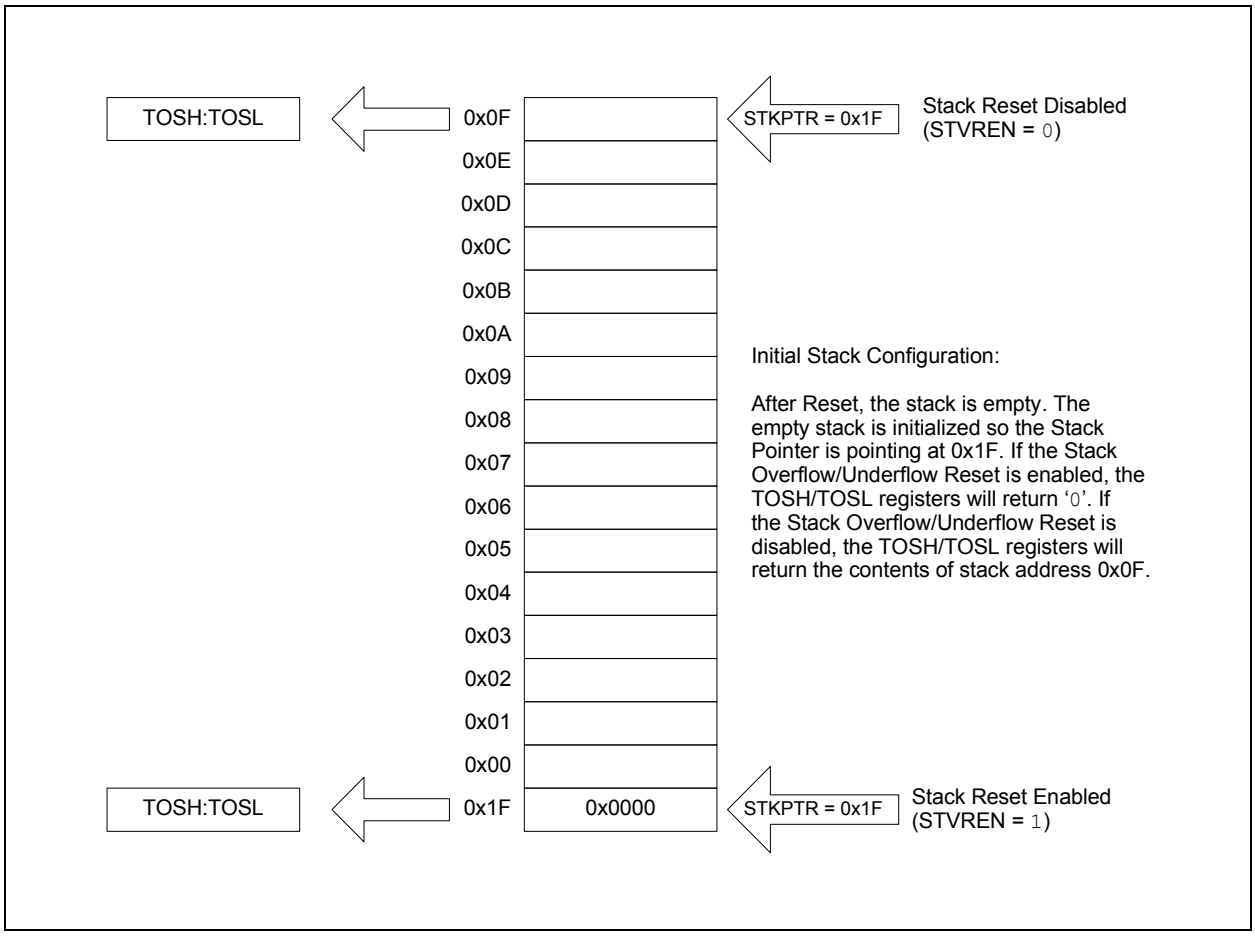

FIGURE 3-5: ACCESSING THE STACK EXAMPLE 2

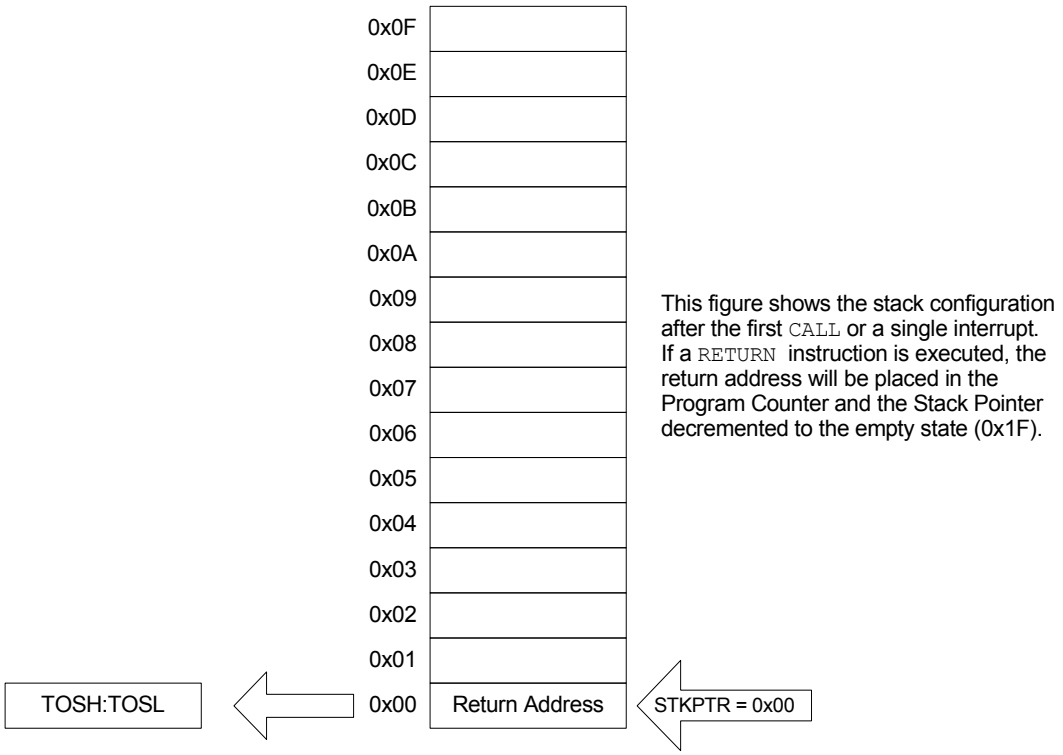

FIGURE 3-6: ACCESSING THE STACK EXAMPLE 3

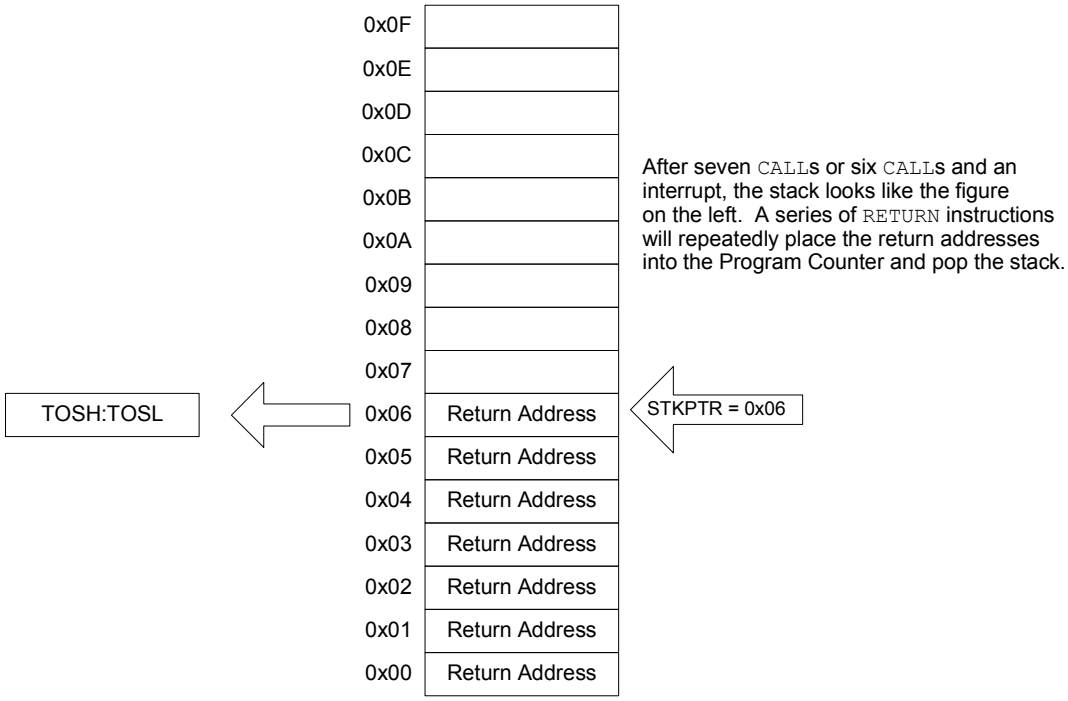

 © 2012 Microchip Technology Inc.

FIGURE 3-7: ACCESSING THE STACK EXAMPLE 4

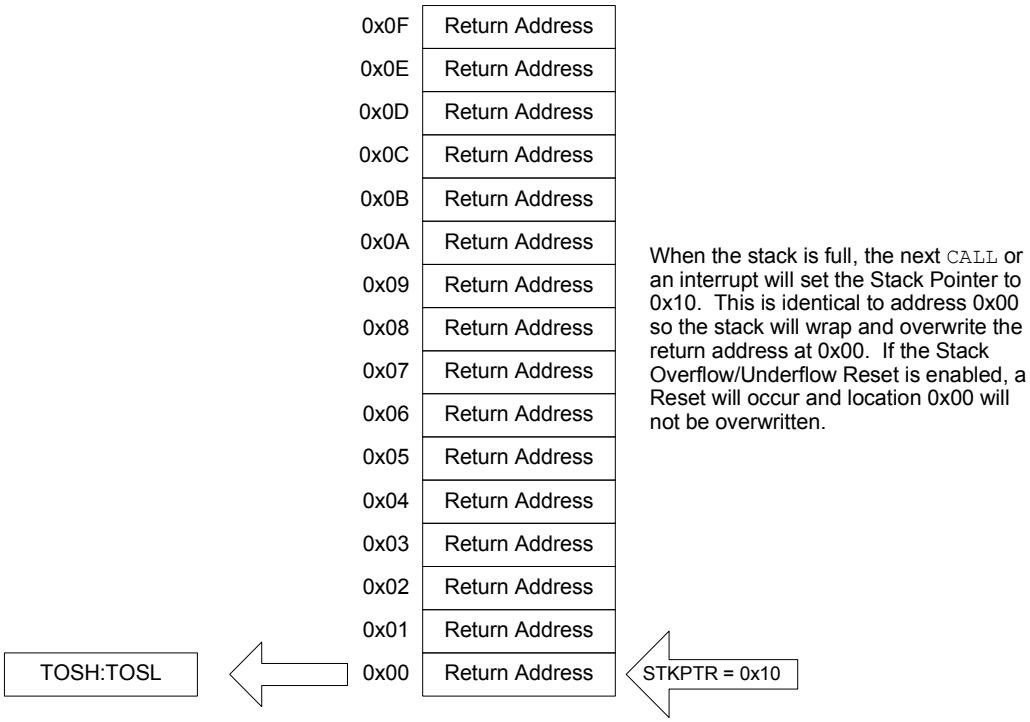

3.5.2 OVERFLOW/UNDERFLOW RESET

If the STVREN bit in Configuration Words is programmed to '1', the device will be reset if the stack is PUSHed beyond the sixteenth level or POPed beyond the first level, setting the appropriate bits (STKOVF or STKUNF, respectively) in the PCON register.

3.6 Indirect Addressing

The INDFn registers are not physical registers. Any instruction that accesses an INDFn register actually accesses the register at the address specified by the File Select Registers (FSR). If the FSRn address specifies one of the two INDFn registers, the read will return '0' and the write will not occur (though Status bits may be affected). The FSRn register value is created by the pair FSRnH and FSRnL.

The FSR registers form a 16-bit address that allows an addressing space with 65536 locations. These locations are divided into three memory regions:

- Traditional Data Memory
- Linear Data Memory
- Program Flash Memory

FIGURE 3-8: INDIRECT ADDRESSING

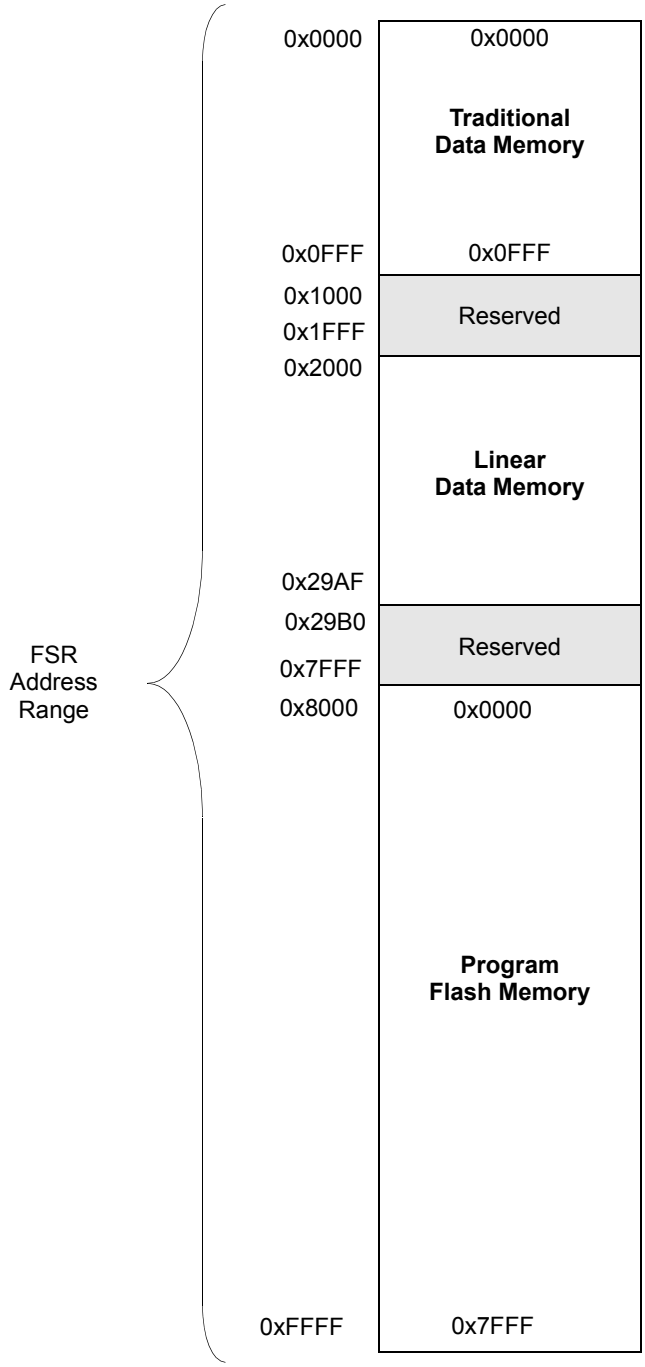

Note: Not all memory regions are completely implemented. Consult device memory tables for memory limits.

 © 2012 Microchip Technology Inc.

3.6.1 TRADITIONAL DATA MEMORY

The traditional data memory is a region from FSR address 0x000 to FSR address 0xFFF. The addresses correspond to the absolute addresses of all SFR, GPR, DPR and common registers.

FIGURE 3-9: TRADITIONAL DATA MEMORY MAP

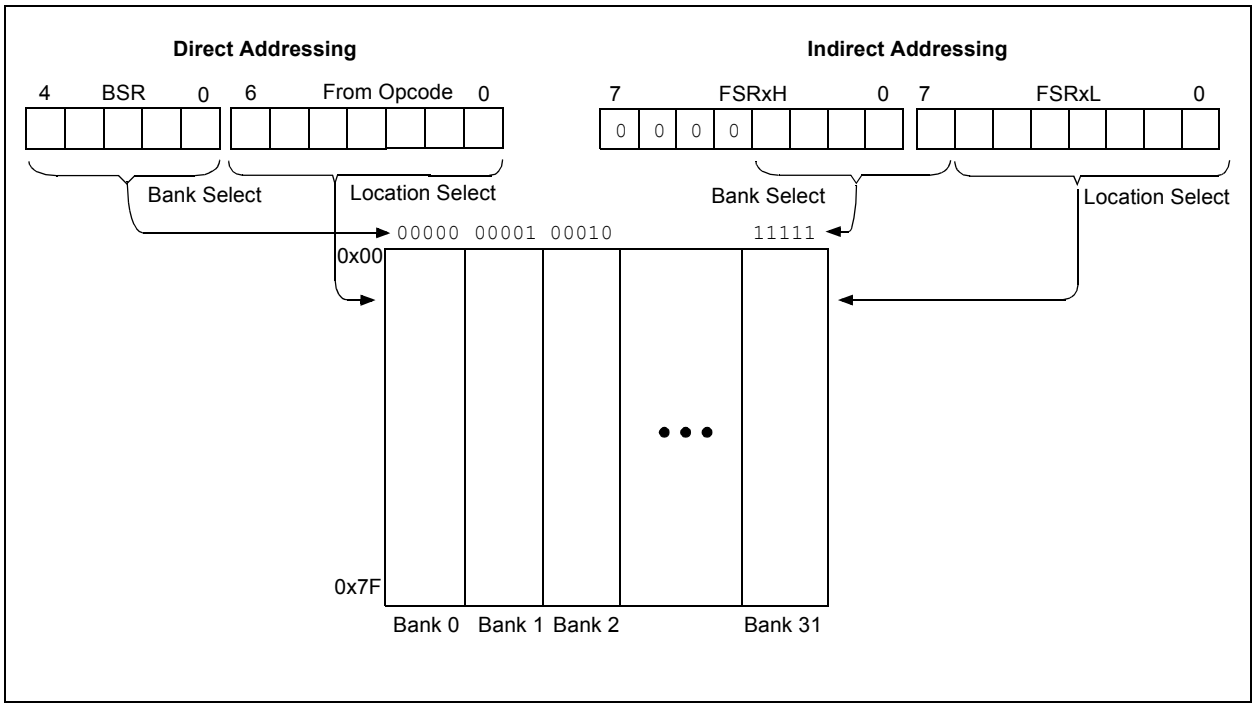

3.6.2 LINEAR DATA MEMORY

The linear data memory is the region from FSR address 0x2000 to FSR address 0x29AF. This region is a virtual region that points back to the 80-byte blocks of DPR or GPR memory in all the banks.

Unimplemented memory reads as 0x00. Use of the linear data memory region allows buffers to be larger than 80 bytes because incrementing the FSR beyond one bank will go directly to the DPR or GPR memory of the next bank.

The 16 bytes of common memory are not included in the linear data memory region.

FIGURE 3-10: LINEAR DATA MEMORY MAP

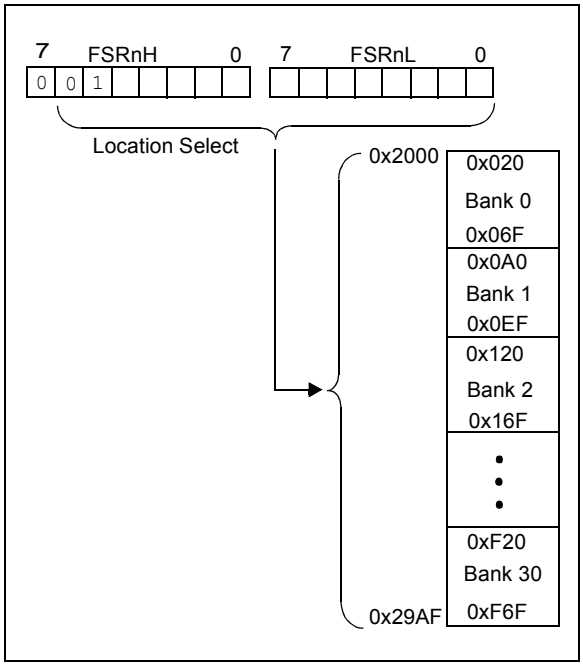

3.6.3 PROGRAM FLASH MEMORY

To make constant data access easier, the entire program Flash memory is mapped to the upper half of the FSR address space. When the MSB of FSRnH is set, the lower 15 bits are the address in program memory which will be accessed through INDF. Only the lower eight bits of each memory location is accessible via INDF. Writing to the program Flash memory cannot be accomplished via the FSR/INDF interface. All instructions that access program Flash memory via the FSR/INDF interface will require one additional instruction cycle to complete.

FIGURE 3-11: PROGRAM FLASH MEMORY MAP

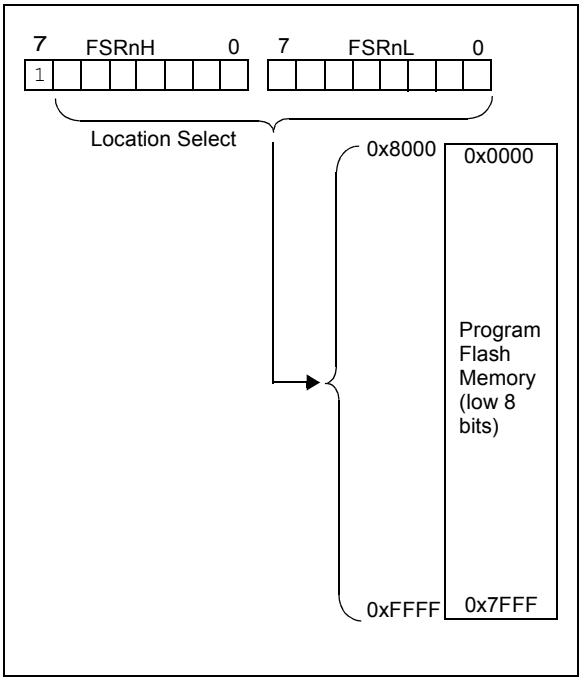

 © 2012 Microchip Technology Inc.

4.0 DEVICE CONFIGURATION

Device configuration consists of Configuration Words, Code Protection and Device ID.

4.1 Configuration Words

There are several Configuration Word bits that allow different oscillator and memory protection options. These are implemented as Configuration Word 1 at 8007h and Configuration Word 2 at 8008h.

Note:	The $\overline{\text{DEBUG}}$ bit in Configuration Words is managed automatically by device development tools including debuggers and programmers. For normal device operation, this bit should be maintained as a '1'.

4.2 Register Definitions: Configuration Words

REGISTER 4-1: CONFIG1: CONFIGURATION WORD 1

R/P-1	R/P-1	R/P-1	R/P-1	R/P-1	U-1
FCMEN	IESO	$\overline{\text{CLKOUTEN}}$	BOREN<1:0>		—
bit 13					bit 8

R/P-1	R/P-1	R/P-1	R/P-1	R/P-1	R/P-1	R/P-1	R/P-1
$\overline{\text{CP}}$	MCLRE	$\overline{\text{PWRTE}}$	WDTE<1:0>		FOSC<2:0>		
bit 7							bit 0

Legend:		
R = Readable bit	P = Programmable bit	U = Unimplemented bit, read as ‘1’
‘0’ = Bit is cleared	‘1’ = Bit is set	-n = Value when blank or after Bulk Erase

bit 13 **FCMEN:** Fail-Safe Clock Monitor Enable bit
1 = Fail-Safe Clock Monitor is enabled
0 = Fail-Safe Clock Monitor is disabled

bit 12 **IESO:** Internal External Switchover bit
1 = Internal/External Switchover mode is enabled
0 = Internal/External Switchover mode is disabled

bit 11 **$\overline{\text{CLKOUTEN}}$:** Clock Out Enable bit
1 = CLKOUT function is disabled. I/O or oscillator function on the CLKOUT pin
0 = CLKOUT function is enabled on the CLKOUT pin

bit 10-9 **BOREN<1:0>:** Brown-out Reset Enable bits(1)
11 = BOR enabled
10 = BOR enabled during operation and disabled in Sleep
01 = BOR controlled by SBOREN bit of the BORCON register
00 = BOR disabled

bit 8 **Unimplemented:** Read as ‘1’

bit 7 **$\overline{\text{CP}}$:** Code Protection bit(2)
1 = Program memory code protection is disabled
0 = Program memory code protection is enabled

bit 6 **MCLRE:** $\overline{\text{MCLR}}$/VPP Pin Function Select bit
If LVP bit = 1:
This bit is ignored.
If LVP bit = 0:
1 = $\overline{\text{MCLR}}$/VPP pin function is $\overline{\text{MCLR}}$; Weak pull-up enabled.
0 = $\overline{\text{MCLR}}$/VPP pin function is digital input; $\overline{\text{MCLR}}$ internally disabled; Weak pull-up under control of WPUA register.

bit 5 **$\overline{\text{PWRTE}}$:** Power-Up Timer Enable bit
1 = PWRT disabled
0 = PWRT enabled

bit 4-3 **WDTE<1:0>:** Watchdog Timer Enable bits
11 = WDT enabled
10 = WDT enabled while running and disabled in Sleep
01 = WDT controlled by the SWDTEN bit in the WDTCON register
00 = WDT disabled

 © 2012 Microchip Technology Inc.

REGISTER 4-1: CONFIG1: CONFIGURATION WORD 1 (CONTINUED)

bit 2-0 **FOSC<2:0>:** Oscillator Selection bits
111 = ECH: External clock, High-Power mode: on CLKIN pin
110 = ECM: External clock, Medium-Power mode: on CLKIN pin
101 = ECL: External clock, Low-Power mode: on CLKIN pin
100 = INTOSC oscillator: I/O function on OSC1 pin
011 = EXTRC oscillator: RC function connected to CLKIN pin
010 = HS oscillator: High-speed crystal/resonator on OSC1 and OSC2 pins
001 = XT oscillator: Crystal/resonator on OSC1 and OSC2 pins
000 = LP oscillator: Low-power crystal on OSC1 and OSC2 pins

Note 1: Enabling Brown-out Reset does not automatically enable Power-up Timer.
2: Once enabled ($\overline{CP}$ = 0), code-protect can only be disabled by bulk erasing the device.

REGISTER 4-2: CONFIG2: CONFIGURATION WORD 2

R/P-1	R/P-1	R/P-1	R/P-1	R/P-1	R/P-1
LVP	$\overline{\text{DEBUG}}$(3)	$\overline{\text{LPBOR}}$	BORV	STVREN	PLLEN
bit 13					bit 8

R/P-1	R/P-1	R/P-1	R/P-1	U-1	U-1	R/P-1	R/P-1
PLLMULT	USBLSCLK	CPUDIV<1:0>		—	—	WRT<1:0>	
bit 7							bit 0

Legend:		
R = Readable bit	P = Programmable bit	U = Unimplemented bit, read as ‘1’
‘0’ = Bit is cleared	‘1’ = Bit is set	-n = Value when blank or after Bulk Erase

bit 13 **LVP:** Low-Voltage Programming Enable bit(1)
1 = Low-voltage programming enabled
0 = High-voltage on $\overline{\text{MCLR}}$ must be used for programming

bit 12 **$\overline{\text{DEBUG}}$:** In-Circuit Debugger Mode bit(3)
1 = In-Circuit Debugger disabled, ICSPCLK and ICSPDAT are general purpose I/O pins
0 = In-Circuit Debugger enabled, ICSPCLK and ICSPDAT are dedicated to the debugger

bit 11 **$\overline{\text{LPBOR}}$:** Low-Power BOR Enable bit
1 = Low-Power Brown-out Reset is disabled
0 = Low-Power Brown-out Reset is enabled

bit 10 **BORV:** Brown-out Reset Voltage Selection bit(2)
1 = Brown-out Reset voltage (Vbor), low trip point selected
0 = Brown-out Reset voltage (Vbor, high trip point selected

bit 9 **STVREN:** Stack Overflow/Underflow Reset Enable bit
1 = Stack Overflow or Underflow will cause a Reset
0 = Stack Overflow or Underflow will not cause a Reset

bit 8 **PLLEN:** PLL Enable bit
1 = PLL is enabled
0 = PLL is disabled

bit 7 **PLLMULT:** PLL Multiplier Selection bit
1 = 3x PLL Output Frequency is selected
0 = 4x PLL Output Frequency is selected

bit 6 **USBLSCLK:** USB Low-Speed Clock Selection bit
1 = USB Clock divide-by 8 (48 MHz system input clock expected)
0 = USB Clock divide-by 4 (24 MHz system input clock expected)

bit 5-4 **CPUDIV<1:0>:** CPU System Clock Selection bits
11 = CPU system clock divided by 6
10 = CPU system clock divided by 3
01 = CPU system clock divided by 2
00 = No CPU system clock divide

bit 3-2 **Unimplemented:** Read as ‘1’

bit 1-0 **WRT<1:0>:** Flash Memory Self-Write Protection bits
8 kW Flash memory:
11 = Write protection off
10 = 000h to 01FFh write-protected, 0200h to 1FFFh may be modified
01 = 000h to 0FFFh write-protected, 1000h to 1FFFh may be modified
00 = 000h to 1FFFh write-protected, no addresses may be modified

Note 1: The LVP bit cannot be programmed to ‘0’ when Programming mode is entered via LVP.
2: See Vbor parameter for specific trip point voltages.
3: The $\overline{\text{DEBUG}}$ bit in Configuration Words is managed automatically by device development tools including debuggers and programmers. For normal device operation, this bit should be maintained as a '1'.

 © 2012 Microchip Technology Inc.

4.3 Code Protection

Code protection allows the device to be protected from unauthorized access. Internal access to the program memory is unaffected by any code protection setting.

4.3.1 PROGRAM MEMORY PROTECTION

The entire program memory space is protected from external reads and writes by the $\overline{CP}$ bit in Configuration Words. When $\overline{CP}$ = 0, external reads and writes of program memory are inhibited and a read will return all '0's. The CPU can continue to read program memory, regardless of the protection bit settings. Writing the program memory is dependent upon the write protection setting. See **Section 4.4 "Write Protection"** for more information.

4.4 Write Protection

Write protection allows the device to be protected from unintended self-writes. Applications, such as bootloader software, can be protected while allowing other regions of the program memory to be modified.

The WRT<1:0> bits in Configuration Words define the size of the program memory block that is protected.

4.5 User ID

Four memory locations (8000h-8003h) are designated as ID locations where the user can store checksum or other code identification numbers. These locations are readable and writable during normal execution. See **Section 11.4 "User ID, Device ID and Configuration Word Access"** for more information on accessing these memory locations. For more information on checksum calculation, see the "*PIC16(L)F1454/5/9 Memory Programming Specification*" (DS41620).

4.6 Device ID and Revision ID

The memory location 8005h and 8006h are where the Device ID and Revision ID are stored. See **Section 11.4 "User ID, Device ID and Configuration Word Access"** for more information on accessing these memory locations.

Development tools, such as device programmers and debuggers, may be used to read the Device ID and Revision ID.

4.7 Register Definitions: Revision and Device

REGISTER 4-3: DEVID: DEVICE ID REGISTER

R	R	R	R	R	R
DEV<13:8>					
bit 13					bit 8

R	R	R	R	R	R	R	R
DEV<7:0>							
bit 7							bit 0

Legend:	
R = Readable bit	
'1' = Bit is set	'0' = Bit is cleared

bit 13-0 **DEV<13:0>:** Device ID bits

Device	DEVICEID<13:0> Values
PIC16F1454	11 0000 0010 0000 (3020h)
PIC16LF1454	11 0000 0010 0100 (3024h)
PIC16F1455	11 0000 0010 0001 (3021h)
PIC16LF1455	11 0000 0010 0101 (3025h)
PIC16F1459	11 0000 0010 0011 (3023h)
PIC16LF1459	11 0000 0010 0111 (3027h)

REGISTER 4-4: REVID: REVISION ID REGISTER

R	R	R	R	R	R
REV<13:8>					
bit 13					bit 8

R	R	R	R	R	R	R	R
REV<7:0>							
bit 7							bit 0

Legend:	
R = Readable bit	
'1' = Bit is set	'0' = Bit is cleared

bit 13-0 **REV<13:0>:** Revision ID bits

 © 2012 Microchip Technology Inc.

5.0 OSCILLATOR MODULE (WITH FAIL-SAFE CLOCK MONITOR)

5.1 Overview

The oscillator module has a wide variety of clock sources and selection features that allow it to be used in a wide range of applications while maximizing performance and minimizing power consumption. Figure 5-1 illustrates a block diagram of the oscillator module.

Clock sources can be supplied from external oscillators, quartz crystal resonators, ceramic resonators and Resistor-Capacitor (RC) circuits. In addition, the system clock source can be supplied from one of two internal oscillators, with a choice of speeds selectable via software. Additional clock features include:

- Selectable system clock source between external or internal sources via software.
- Two-Speed Start-up mode, which minimizes latency between external oscillator start-up and code execution.
- Fail-Safe Clock Monitor (FSCM) designed to detect a failure of the external clock source (LP, XT, HS, EC or RC modes) and switch automatically to the internal oscillator.
- Oscillator Start-up Timer (OST) ensures stability of crystal oscillator sources
- Fast start-up oscillator allows internal circuits to power up and stabilize before switching to the 16 MHz HFINTOSC
- 3x/4x selectable Phase Lock Frequency Multiplier allows operation at 24, 32 or 48 MHz.
- USB with configurable Full/Low speed operation.

The oscillator module can be configured in one of eight clock modes.

1. ECL – External Clock Low-Power mode (0 MHz to 0.5 MHz)
2. ECM – External Clock Medium-Power mode (0.5 MHz to 4 MHz)
3. ECH – External Clock High-Power mode (4 MHz to 20 MHz)
4. LP – 32 kHz Low-Power Crystal mode.
5. XT – Medium Gain Crystal or Ceramic Resonator Oscillator mode (up to 4 MHz)
6. HS – High Gain Crystal or Ceramic Resonator mode (4 MHz to 20 MHz)
7. RC – External Resistor-Capacitor (RC).
8. INTOSC – Internal oscillator (31 kHz to 16 MHz).

Clock Source modes are selected by the FOSC<2:0> bits in the Configuration Words. The FOSC bits determine the type of oscillator that will be used when the device is first powered.

The EC clock mode relies on an external logic level signal as the device clock source. The LP, XT, and HS clock modes require an external crystal or resonator to be connected to the device. Each mode is optimized for a different frequency range. The RC clock mode requires an external resistor and capacitor to set the oscillator frequency.

The INTOSC internal oscillator block produces a low and high-frequency clock source, designated LFINTOSC and HFINTOSC. (see Internal Oscillator Block, Figure 5-1). A wide selection of device clock frequencies may be derived from these two clock sources.

FIGURE 5-1: SIMPLIFIED PIC® MCU CLOCK SOURCE BLOCK DIAGRAM

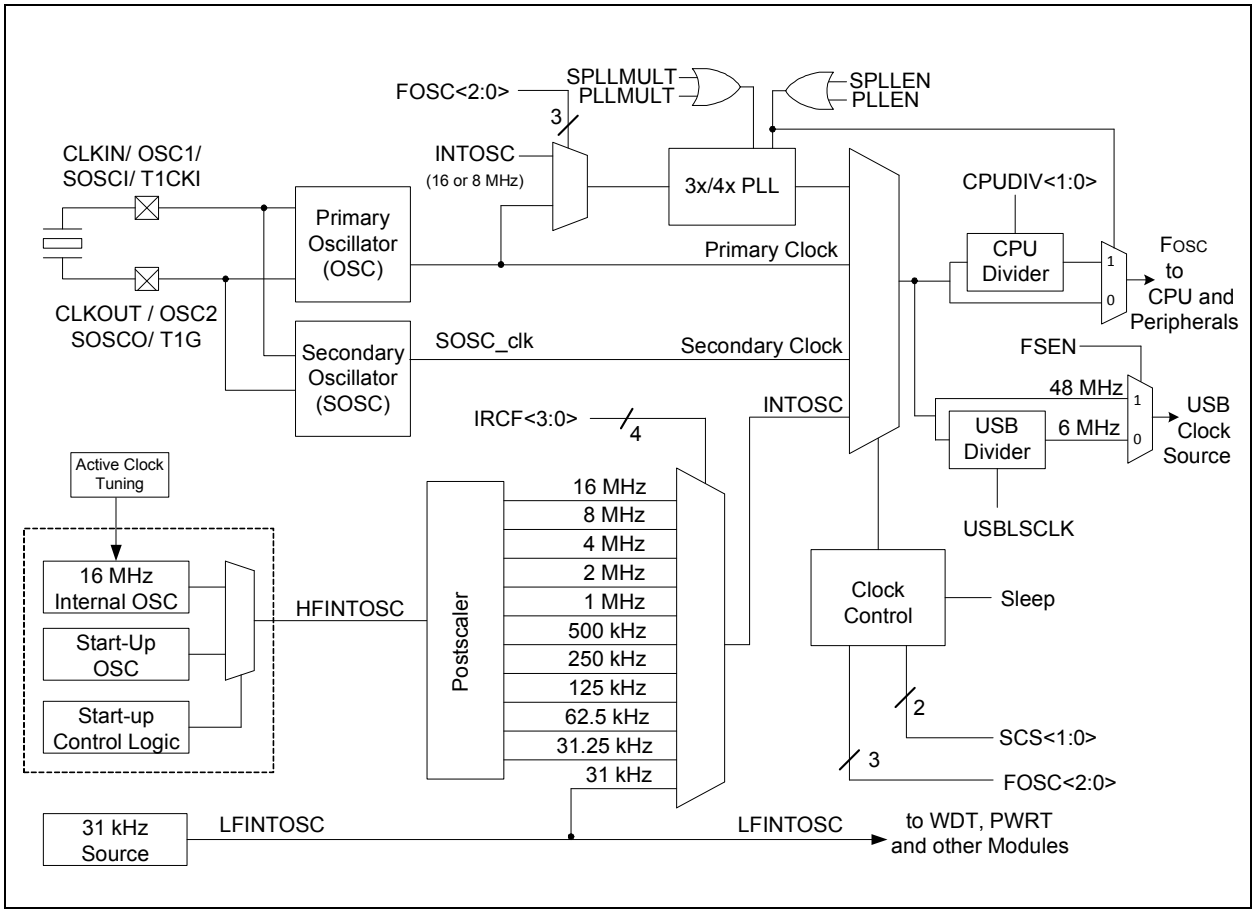

 © 2012 Microchip Technology Inc.

5.2 Clock Source Types

Clock sources can be classified as external or internal.

External clock sources rely on external circuitry for the clock source to function. Examples are: oscillator modules (EC mode), quartz crystal resonators or ceramic resonators (LP, XT and HS modes) and Resistor-Capacitor (RC) mode circuits.

Internal clock sources are contained within the oscillator module. The internal oscillator block has two internal oscillators that are used to generate the internal system clock sources: the 16 MHz High-Frequency Internal Oscillator and the 31 kHz Low-Frequency Internal Oscillator (LFINTOSC).

The system clock can be selected between external or internal clock sources via the System Clock Select (SCS) bits in the OSCCON register. See **Section 5.3 "CPU Clock Divider"** for additional information.

5.2.1 EXTERNAL CLOCK SOURCES

An external clock source can be used as the device system clock by performing one of the following actions:

- Program the FOSC<2:0> bits in the Configuration Words to select an external clock source that will be used as the default system clock upon a device Reset.
- Write the SCS<1:0> bits in the OSCCON register to switch the system clock source to:
  - Secondary oscillator during run-time, or
  - An external clock source determined by the value of the FOSC bits.

See **Section 5.3 "CPU Clock Divider"**for more information.

5.2.1.1 EC Mode

The External Clock (EC) mode allows an externally generated logic level signal to be the system clock source. When operating in this mode, an external clock source is connected to the OSC1 input. OSC2/CLKOUT is available for general purpose I/O or CLKOUT. Figure 5-2 shows the pin connections for EC mode.

EC mode has three power modes to select from through Configuration Words:

- High power, 4-20 MHz (FOSC = `111`)
- Medium power, 0.5-4 MHz (FOSC = `110`)
- Low power, 0-0.5 MHz (FOSC = `101`)

The Oscillator Start-up Timer (OST) is disabled when EC mode is selected. Therefore, there is no delay in operation after a Power-on Reset (POR) or wake-up from Sleep. Because the PIC® MCU design is fully static, stopping the external clock input will have the effect of halting the device while leaving all data intact. Upon restarting the external clock, the device will resume operation as if no time had elapsed.

FIGURE 5-2: EXTERNAL CLOCK (EC) MODE OPERATION

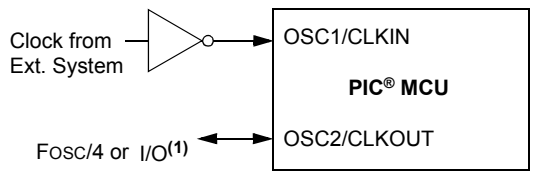

Note 1: Output depends upon $\overline{\text{CLKOUTEN}}$ bit of the Configuration Words.

5.2.1.2 LP, XT, HS Modes

The LP, XT and HS modes support the use of quartz crystal resonators or ceramic resonators connected to OSC1 and OSC2 (Figure 5-3). The three modes select a low, medium or high gain setting of the internal inverter-amplifier to support various resonator types and speed.

LP Oscillator mode selects the lowest gain setting of the internal inverter-amplifier. LP mode current consumption is the least of the three modes. This mode is designed to drive only 32.768 kHz tuning-fork type crystals (watch crystals).

XT Oscillator mode selects the intermediate gain setting of the internal inverter-amplifier. XT mode current consumption is the medium of the three modes. This mode is best suited to drive resonators with a medium drive level specification.

HS Oscillator mode selects the highest gain setting of the internal inverter-amplifier. HS mode current consumption is the highest of the three modes. This mode is best suited for resonators that require a high drive setting.

Figure 5-3 and Figure 5-4 show typical circuits for quartz crystal and ceramic resonators, respectively.

FIGURE 5-3: QUARTZ CRYSTAL OPERATION (LP, XT OR HS MODE)

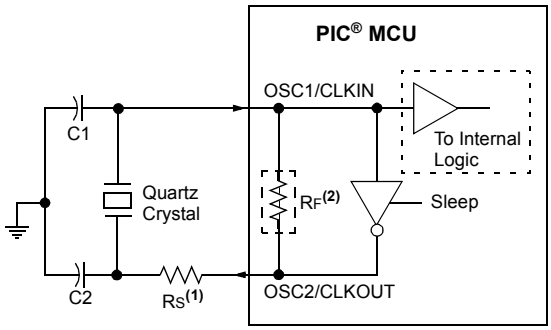

Note 1: A series resistor (RS) may be required for quartz crystals with low drive level.

2: The value of RF varies with the Oscillator mode selected (typically between 2 MΩ to 10 MΩ).

Note 1: Quartz crystal characteristics vary according to type, package and manufacturer. The user should consult the manufacturer data sheets for specifications and recommended application.

2: Always verify oscillator performance over the VDD and temperature range that is expected for the application.

3: For oscillator design assistance, reference the following Microchip Applications Notes:

- AN826, "*Crystal Oscillator Basics and Crystal Selection for rfPIC® and PIC® Devices*" (DS00826)
- AN849, "*Basic PIC® Oscillator Design*" (DS00849)
- AN943, "*Practical PIC® Oscillator Analysis and Design*" (DS00943)
- AN949, "*Making Your Oscillator Work*" (DS00949)

FIGURE 5-4: CERAMIC RESONATOR OPERATION (XT OR HS MODE)

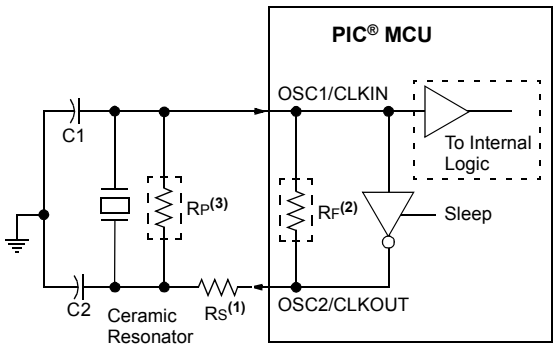

Note 1: A series resistor (RS) may be required for ceramic resonators with low drive level.

2: The value of RF varies with the Oscillator mode selected (typically between 2 MΩ to 10 MΩ).

3: An additional parallel feedback resistor (RP) may be required for proper ceramic resonator operation.

5.2.1.3 Oscillator Start-up Timer (OST)

If the oscillator module is configured for LP, XT or HS modes, the Oscillator Start-up Timer (OST) counts 1024 oscillations from OSC1. This occurs following a Power-on Reset (POR) and when the Power-up Timer (PWRT) has expired (if configured), or a wake-up from Sleep. During this time, the program counter does not increment and program execution is suspended unless either FSCM or Two-Speed Start-Up are enabled. In this case, code will continue to execute at the selected INTOSC frequency while the OST is counting . The OST ensures that the oscillator circuit, using a quartz crystal resonator or ceramic resonator, has started and is providing a stable system clock to the oscillator module.

In order to minimize latency between external oscillator start-up and code execution, the Two-Speed Clock Start-up mode can be selected (see **Section 5.6 "Two-Speed Clock Start-up Mode"**).

 © 2012 Microchip Technology Inc.

5.2.1.4 3x PLL or 4x PLL

The oscillator module contains a PLL that can be used with both external and internal clock sources to provide a system clock source. By setting the SPLLMULT bit of the OSCCON register, 3x PLL is selected. By clearing the SPLLMULT bit of the OSCCON register, 4x PLL is selected. The input frequency for the PLL must fall within specifications. See the PLL Clock Timing Specifications in **Section 29.0 "Electrical Specifications"**.

The PLL may be enabled for use by one of two methods:

1. Program the PLLEN bit in Configuration Words to a '1'.
2. Write the SPLLEN bit in the OSCCON register to a '1'. If the PLLEN bit in Configuration Words is programmed to a '1', then the value of SPLLEN is ignored.

PLL	HFINTOSC (MHz)	ECH/HS (MHz)	System Clock (MHz)
4x	8	8 - 12	32 - 48
3x	16, 8	8 - 16	24 - 48

5.2.1.5 Secondary Oscillator

The secondary oscillator is a separate crystal oscillator that is associated with the Timer1 peripheral. It is optimized for timekeeping operations with a 32.768 kHz crystal connected between the SOSCO and SOSCI device pins.

The secondary oscillator can be used as an alternate system clock source and can be selected during run-time using clock switching. Refer to **Section 5.3 "CPU Clock Divider"** for more information.

FIGURE 5-5: QUARTZ CRYSTAL OPERATION (SECONDARY OSCILLATOR)

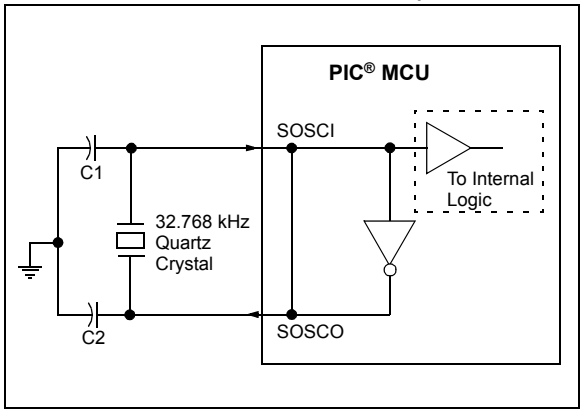

Note 1: Quartz crystal characteristics vary according to type, package and manufacturer. The user should consult the manufacturer data sheets for specifications and recommended application.

2: Always verify oscillator performance over the VDD and temperature range that is expected for the application.

3: For oscillator design assistance, reference the following Microchip Applications Notes:

- AN826, "*Crystal Oscillator Basics and Crystal Selection for rfPIC® and PIC® Devices*" (DS00826)
- AN849, "*Basic PIC® Oscillator Design*" (DS00849)
- AN943, "*Practical PIC® Oscillator Analysis and Design*" (DS00943)
- AN949, "*Making Your Oscillator Work*" (DS00949)
- TB097, "*Interfacing a Micro Crystal MS1V-T1K 32.768 kHz Tuning Fork Crystal to a PIC16F690/SS*" (DS91097)
- AN1288, "*Design Practices for Low-Power External Oscillators*" (DS01288)

5.2.1.6 External RC Mode

The external Resistor-Capacitor (RC) modes support the use of an external RC circuit. This allows the designer maximum flexibility in frequency choice while keeping costs to a minimum when clock accuracy is not required.

The RC circuit connects to OSC1. OSC2/CLKOUT is available for general purpose I/O or CLKOUT. The function of the OSC2/CLKOUT pin is determined by the $\overline{\text{CLKOUTEN}}$ bit in Configuration Words.

Figure 5-6 shows the external RC mode connections.

FIGURE 5-6: EXTERNAL RC MODES

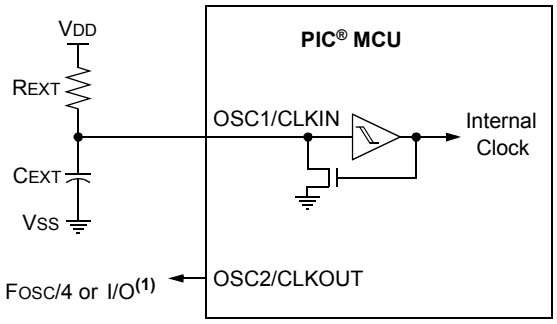

Recommended values: 10 kΩ ≤ REXT ≤ 100 kΩ, <3V
3 kΩ ≤ REXT ≤ 100 kΩ, 3-5V
CEXT > 20 pF, 2-5V

Note 1: Output depends upon $\overline{\text{CLKOUTEN}}$ bit of the Configuration Words.

The RC oscillator frequency is a function of the supply voltage, the resistor (REXT) and capacitor (CEXT) values and the operating temperature. Other factors affecting the oscillator frequency are:

- threshold voltage variation
- component tolerances
- packaging variations in capacitance

The user also needs to take into account variation due to tolerance of the external RC components used.

5.2.2 INTERNAL CLOCK SOURCES

The device may be configured to use the internal oscillator block as the system clock by performing one of the following actions:

- Program the FOSC<2:0> bits in Configuration Words to select the INTOSC clock source, which will be used as the default system clock upon a device Reset.
- Write the SCS<1:0> bits in the OSCCON register to switch the system clock source to the internal oscillator during run-time. See **Section 5.3 "CPU Clock Divider"**for more information.

In **INTOSC** mode, OSC1/CLKIN is available for general purpose I/O. OSC2/CLKOUT is available for general purpose I/O or CLKOUT.

The function of the OSC2/CLKOUT pin is determined by the $\overline{\text{CLKOUTEN}}$ bit in Configuration Words.

The internal oscillator block has two independent oscillators that provides the internal system clock source.

1. The **HFINTOSC** (High-Frequency Internal Oscillator) is factory calibrated and operates at 16 MHz. The frequency of the HFINTOSC can be user-adjusted via software using the OSCTUNE register (Register 5-3).
2. The **LFINTOSC** (Low-Frequency Internal Oscillator) is uncalibrated and operates at 31 kHz.

5.2.2.1 HFINTOSC

The High-Frequency Internal Oscillator (HFINTOSC) is a factory calibrated 16 MHz internal clock source. The frequency of the HFINTOSC can be altered via software using the OSCTUNE register (Register 5-3).

The output of the HFINTOSC connects to a postscaler and multiplexer (see Figure 5-1). The frequency derived from the HFINTOSC can be selected via software using the IRCF<3:0> bits of the OSCCON register. See **Section 5.2.2.4 "Internal Oscillator Frequency Selection"** for more information.

The HFINTOSC is enabled by:

- Configure the IRCF<3:0> bits of the OSCCON register for the desired HF frequency, and
- FOSC<2:0> = `100`, or
- Set the System Clock Source (SCS) bits of the OSCCON register to '`1x`'.

A fast start-up oscillator allows internal circuits to power-up and stabilize before switching to HFINTOSC.

The High-Frequency Internal Oscillator Ready bit (HFIOFR) of the OSCSTAT register indicates when the HFINTOSC is running.

The High-Frequency Internal Oscillator Stable bit (HFIOFS) of the OSCSTAT register indicates when the HFINTOSC is running within 0.5% of its final value.

 © 2012 Microchip Technology Inc.

5.2.2.2 Internal Oscillator Frequency Adjustment

The 16 MHz internal oscillator is factory calibrated. This internal oscillator can be adjusted in software by writing to the OSCTUNE register (Register 5-3). Since all HFINTOSC clock sources are derived from the 16 MHz internal oscillator a change in the OSCTUNE register value will apply to all HFINTOSC frequencies.

The default value of the OSCTUNE register is '0'. The value is a 7-bit two's complement number. A value of 3Fh will provide an adjustment to the maximum frequency. A value of 40h will provide an adjustment to the minimum frequency.

When the OSCTUNE register is modified, the oscillator frequency will begin shifting to the new frequency. Code execution continues during this shift. There is no indication that the shift has occurred.

OSCTUNE does not affect the LFINTOSC frequency. Operation of features that depend on the LFINTOSC clock source frequency, such as the Power-up Timer (PWRT), Watchdog Timer (WDT), Fail-Safe Clock Monitor (FSCM) and peripherals, are *not* affected by the change in frequency.

5.2.2.3 LFINTOSC

The Low-Frequency Internal Oscillator (LFINTOSC) is an uncalibrated 31 kHz internal clock source.

The output of the LFINTOSC connects to a postscaler and multiplexer (see Figure 5-1). Select 31 kHz, via software, using the IRCF<3:0> bits of the OSCCON register. See **Section 5.2.2.4 "Internal Oscillator Frequency Selection"** for more information. The LFINTOSC is also the frequency for the Power-up Timer (PWRT), Watchdog Timer (WDT) and Fail-Safe Clock Monitor (FSCM).

The LFINTOSC is enabled by selecting 31 kHz (IRCF<3:0> bits of the OSCCON register = 000) as the system clock source (SCS bits of the OSCCON register = 1x), or when any of the following are enabled:

- Configure the IRCF<3:0> bits of the OSCCON register for the desired LF frequency, and
- FOSC<2:0> = 100, or
- Set the System Clock Source (SCS) bits of the OSCCON register to '1x'

Peripherals that use the LFINTOSC are:

- Power-up Timer (PWRT)
- Watchdog Timer (WDT)
- Fail-Safe Clock Monitor (FSCM)

The Low-Frequency Internal Oscillator Ready bit (LFIOFR) of the OSCSTAT register indicates when the LFINTOSC is running.

5.2.2.4 Internal Oscillator Frequency Selection

The system clock speed can be selected via software using the Internal Oscillator Frequency Select bits IRCF<3:0> of the OSCCON register.

The output of the 16 MHz HFINTOSC and 31 kHz LFINTOSC connects to a postscaler and multiplexer (see Figure 5-1). The Internal Oscillator Frequency Select bits IRCF<3:0> of the OSCCON register select the frequency output of the internal oscillators. One of the following frequencies can be selected via software:

- HFINTOSC
  - 48 MHz (requires 3x PLL)
  - 32 MHz (requires 4x PLL)
  - 24 MHz (requires 3x PLL)
  - 16 MHz
  - 8 MHz
  - 4 MHz
  - 2 MHz
  - 1 MHz
  - 500 kHz (Default after Reset)
  - 250 kHz
  - 125 kHz
  - 62.5 kHz
  - 31.25 kHz
- LFINTOSC
  - 31 kHz

Note:	Following any Reset, the IRCF<3:0> bits of the OSCCON register are set to '0111' and the frequency selection is set to 500 kHz. The user can modify the IRCF bits to select a different frequency.

The IRCF<3:0> bits of the OSCCON register allow duplicate selections for some frequencies. These duplicate choices can offer system design trade-offs. Lower power consumption can be obtained when changing oscillator sources for a given frequency. Faster transition times can be obtained between frequency changes that use the same oscillator source.

5.2.2.5 Internal Oscillator Frequency Selection Using the PLL

The Internal Oscillator Block can be used with the PLL associated with the External Oscillator Block to produce a 24 MHz, 32 MHz or 48 MHz internal system clock source. The following settings are required to use the PLL internal clock sources:

- The FOSC bits of the Configuration Words must be set to use the INTOSC source as the device system clock (FOSC<2:0> = 100).
- The SCS bits of the OSCCON register must be cleared to use the clock determined by FOSC<2:0> in Configuration Words (SCS<1:0> = 00).
- For 24 MHz or 32 MHz, the IRCF bits of the OSCCON register must be set to the 8 MHz HFINTOSC set to use (IRCF<3:0> = 1110).
- For 48 MHz, the IRCF bits of the OSCCON register must be set to the 16 MHz HFINTOSC set to use (IRCF<3:0> = 1111).
- For 24 MHz or 48 MHz, the 3x PLL is required. The SPLLMULT of the OSCCON register must be set to use (SPLLMULT = 1).
- For 32 MHz, the 4x PLL is required. The SPLLMULT of the OSCCON register must be clear to use (SPLLMULT = 0).
- The SPLLEN bit of the OSCCON register must be set to enable the PLL, or the PLLEN bit of the Configuration Words must be programmed to a '1'.

Note:	When using the PLLEN bit of the Configuration Words, the PLL cannot be disabled by software. The 8 MHz and 16 MHz HFINTOSC options will no longer be available.

The PLL is not available for use with the internal oscillator when the SCS bits of the OSCCON register are set to '1x'. The SCS bits must be set to '00' to use the PLL with the internal oscillator.

5.2.2.6 Internal Oscillator Clock Switch Timing

When switching between the HFINTOSC and the LFINTOSC, the new oscillator may already be shut down to save power (see Figure 5-7). If this is the case, there is a delay after the IRCF<3:0> bits of the OSCCON register are modified before the frequency selection takes place. The OSCSTAT register will reflect the current active status of the HFINTOSC and LFINTOSC oscillators. The sequence of a frequency selection is as follows:

1. IRCF<3:0> bits of the OSCCON register are modified.
2. If the new clock is shut down, a clock start-up delay is started.
3. Clock switch circuitry waits for a falling edge of the current clock.
4. The current clock is held low and the clock switch circuitry waits for a rising edge in the new clock.
5. The new clock is now active.
6. The OSCSTAT register is updated as required.
7. Clock switch is complete.

See Figure 5-7 for more details.

If the internal oscillator speed is switched between two clocks of the same source, there is no start-up delay before the new frequency is selected. Clock switching time delays are shown in Table 5-3.

Start-up delay specifications are located in the oscillator tables of **Section 29.0 "Electrical Specifications"**.

 © 2012 Microchip Technology Inc.

FIGURE 5-7: INTERNAL OSCILLATOR SWITCH TIMING

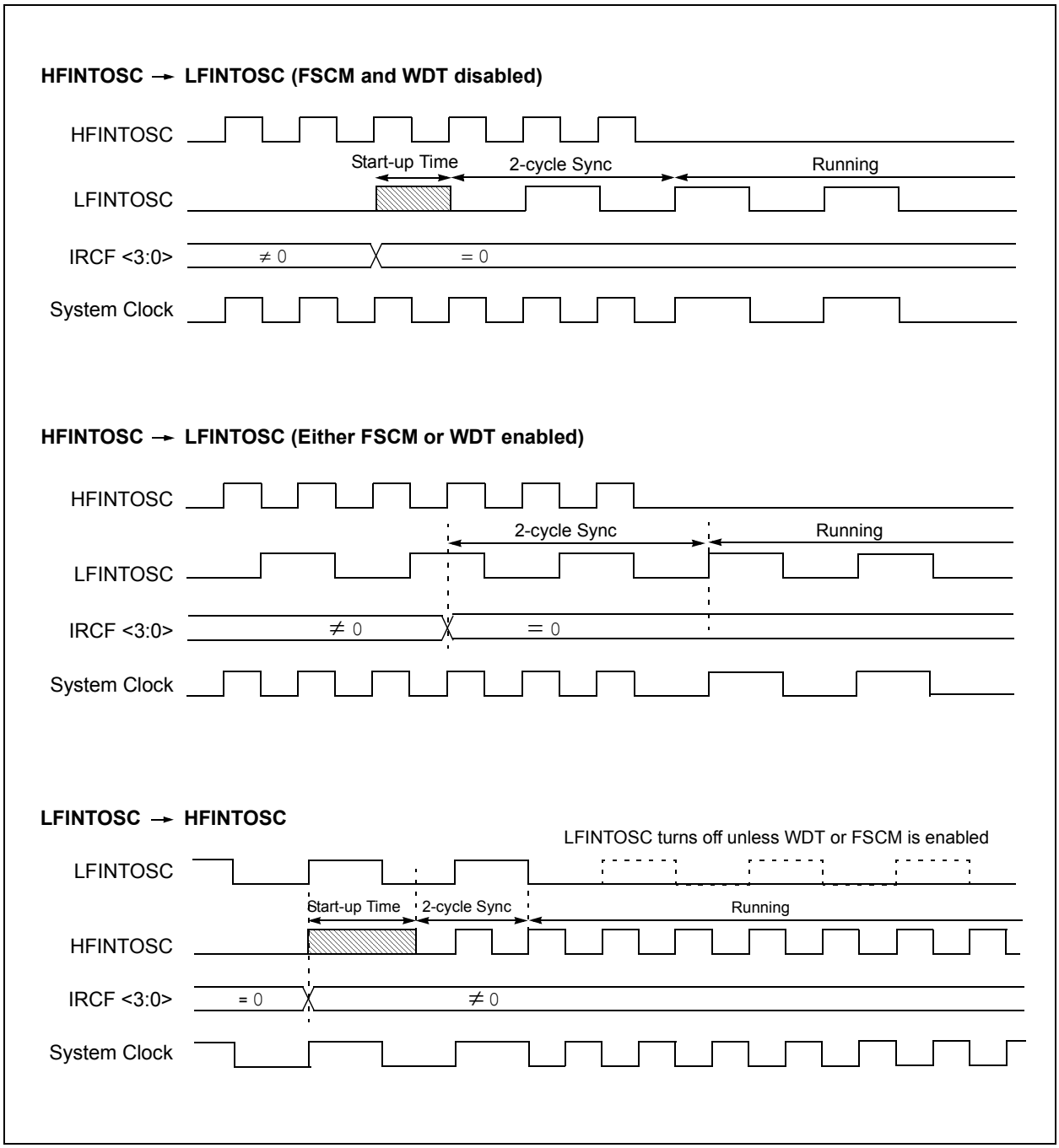

5.3 CPU Clock Divider

The CPU Clock divider allows the system clock to run at a slower speed than the Low/Full-Speed USB module clock, while sharing the same clock source. Only the oscillator defined by the settings of the FOSC bits of the Configuration Words may be used with the CPU clock divider. the CPU clock divider is controlled by the CPUDIV<1:0> bits of the Configuration Words.

Setting the CPUDIV bits will set the system clock to:

- Equal the clock speed of the USB module
- Half the clock speed of the USB module
- One third the clock speed of the USB Module
- One sixth clock speed of the USB module

For more information on the CPU Clock Divider, see Figure 5-1 and Configuration Words.

5.4 USB Operation

The USB module is designed to operate in two different modes:

- Low Speed
- Full Speed

To achieve the timing requirements imposed by the USB specifications, the internal oscillator or the primary external oscillator are required for the USB module. The FOSC bits of the Configuration Words must be set to INTOSC, ECH or HS mode with a clock frequency of 6, 12, or 16 MHz.

5.4.1 LOW-SPEED OPERATION

For low-speed USB Operation, a 24 MHz clock is required for the USB module. To generate the 24 MHz clock, the following Oscillator modes are allowed:

- HFINTOSC with PLL
- ECH mode
- HS mode

Table 5-1 shows the recommended Clock mode for low-speed operation.

5.4.2 HIGH-SPEED OPERATION

For full-speed USB operation, a 48 MHz clock is required for the USB module. To generate the 48 MHz clock, the following oscillator modes are allowed:

- HFINTOSC with PLL
- ECH mode
- HS mode

Table 5-1 shows the recommended Clock mode for full-speed operation.

TABLE 5-1: LOW-SPEED USB CLOCK SETTINGS

Clock Mode	Clock Frequency	PLL Value	USBLSCLK	CPUDIV<1:0>	System Clock Frequency (MHz)
HFINTOSC	16 MHz	3x	1	11 10 01 00	8 16 24 48
	8 MHz	3x	0	11 10 01 00	4 8 12 24
ECH or HS mode	16 MHz	3x	1	11 10 01 00	8 16 24 48
	12 MHz	4x	1	11 10 01 00	8 16 24 48
	8 MHz	3x	0	11 10 01 00	4 8 12 24

 © 2012 Microchip Technology Inc.

TABLE 5-2: HIGH-SPEED USB CLOCK SETTINGS

Clock Mode	Clock Frequency	PLL Value	USBLSCLK	CPUDIV<1:0>	System Clock Frequency (MHz)
HFINTOSC	16 MHz	3x	0	11 10 01 00	8 16 24 48
ECH or HS mode	16 MHz	3x	0	11 10 01 00	8 16 24 48
	12 MHz	4x	0	11 10 01 00	8 16 24 48

5.5 Clock Switching

The system clock source can be switched between external and internal clock sources via software using the System Clock Select (SCS) bits of the OSCCON register. The following clock sources can be selected using the SCS bits:

- Default system oscillator determined by FOSC bits in Configuration Words
- Secondary oscillator 32 kHz crystal
- Internal Oscillator Block (INTOSC)

5.5.1 SYSTEM CLOCK SELECT (SCS) BITS

The System Clock Select (SCS) bits of the OSCCON register selects the system clock source that is used for the CPU and peripherals.

- When the SCS bits of the OSCCON register = `00`, the system clock source is determined by value of the FOSC<2:0> bits in the Configuration Words.
- When the SCS bits of the OSCCON register = `01`, the system clock source is the secondary oscillator.
- When the SCS bits of the OSCCON register = `1x`, the system clock source is chosen by the internal oscillator frequency selected by the IRCF<3:0> bits of the OSCCON register. After a Reset, the SCS bits of the OSCCON register are always cleared.

Note:	Any automatic clock switch, which may occur from Two-Speed Start-up or Fail-Safe Clock Monitor, does not update the SCS bits of the OSCCON register. The user can monitor the OSTS bit of the OSCSTAT register to determine the current system clock source.

When switching between clock sources, a delay is required to allow the new clock to stabilize. These oscillator delays are shown in Table 5-3.

5.5.2 OSCILLATOR START-UP TIMER STATUS (OSTS) BIT

The Oscillator Start-up Timer Status (OSTS) bit of the OSCSTAT register indicates whether the system clock is running from the external clock source, as defined by the FOSC<2:0> bits in the Configuration Words, or from the internal clock source. In particular, OSTS indicates that the Oscillator Start-up Timer (OST) has timed out for LP, XT or HS modes. The OST does not reflect the status of the secondary oscillator.

5.5.3 SECONDARY OSCILLATOR

The secondary oscillator is a separate crystal oscillator associated with the Timer1 peripheral. It is optimized for timekeeping operations with a 32.768 kHz crystal connected between the SOSCO and SOSCI device pins.

The secondary oscillator is enabled using the T1OSCEN control bit in the T1CON register. See **Section 20.0 “Timer1 Module with Gate Control”** for more information about the Timer1 peripheral.

5.5.4 SECONDARY OSCILLATOR READY (SOSCR) BIT

The user must ensure that the secondary oscillator is ready to be used before it is selected as a system clock source. The Secondary Oscillator Ready (SOSCR) bit of the OSCSTAT register indicates whether the secondary oscillator is ready to be used. After the SOSCR bit is set, the SCS bits can be configured to select the secondary oscillator.

 © 2012 Microchip Technology Inc.

5.6 Two-Speed Clock Start-up Mode

Two-Speed Start-up mode provides additional power savings by minimizing the latency between external oscillator start-up and code execution. In applications that make heavy use of the Sleep mode, Two-Speed Start-up will remove the external oscillator start-up time from the time spent awake and can reduce the overall power consumption of the device. This mode allows the application to wake-up from Sleep, perform a few instructions using the INTOSC internal oscillator block as the clock source and go back to Sleep without waiting for the external oscillator to become stable.

Two-Speed Start-up provides benefits when the oscillator module is configured for LP, XT, or HS modes. The Oscillator Start-up Timer (OST) is enabled for these modes and must count 1024 oscillations before the oscillator can be used as the system clock source.

If the oscillator module is configured for any mode other than LP, XT or HS mode, then Two-Speed Start-up is disabled. This is because the external clock oscillator does not require any stabilization time after POR or an exit from Sleep.

If the OST count reaches 1024 before the device enters Sleep mode, the OSTS bit of the OSCSTAT register is set and program execution switches to the external oscillator. However, the system may never operate from the external oscillator if the time spent awake is very short.

> **Note:** Executing a `SLEEP` instruction will abort the oscillator start-up time and will cause the OSTS bit of the OSCSTAT register to remain clear.

5.6.1 TWO-SPEED START-UP MODE CONFIGURATION

Two-Speed Start-up mode is configured by the following settings:

- IESO (of the Configuration Words) = `1`; Internal/External Switchover bit (Two-Speed Start-up mode enabled).
- SCS (of the OSCCON register) = `00`.
- FOSC<2:0> bits in the Configuration Words configured for LP, XT or HS mode.

Two-Speed Start-up mode is entered after:

- Power-on Reset (POR) and, if enabled, after Power-up Timer (PWRT) has expired, or
- Wake-up from Sleep.

> **Note:** When FSCM is enabled, Two-Speed Start-Up will automatically be enabled.

TABLE 5-3: OSCILLATOR SWITCHING DELAYS

Switch From	Switch To	Frequency	Oscillator Delay
Sleep/POR	LFINTOSC(1) HFINTOSC	31 kHz 31.25 kHz-16 MHz	Oscillator Warm-up Delay (TWARM)
Sleep/POR	EC, RC	DC – 20 MHz	2 cycles
LFINTOSC	EC, RC	DC – 20 MHz	1 cycle of each
Sleep/POR	Secondary Oscillator, LP, XT, HS(1)	32 kHz-20 MHz	1024 Clock Cycles (OST)
Any clock source	HFINTOSC(1)	31.25 kHz-16 MHz	2 μs (approx.)
Any clock source	LFINTOSC(1)	31 kHz	1 cycle of each
Any clock source	Secondary Oscillator	32 kHz	1024 Clock Cycles (OST)
PLL Inactive	PLL Active	24-48 MHz	2 ms (approx.)

Note 1: PLL inactive.

5.6.2 TWO-SPEED START-UP SEQUENCE

1. Wake-up from Power-on Reset or Sleep.
2. Instructions begin execution by the internal oscillator at the frequency set in the IRCF<3:0> bits of the OSCCON register.
3. OST enabled to count 1024 clock cycles.
4. OST timed out, wait for falling edge of the internal oscillator.
5. OSTS is set.
6. System clock held low until the next falling edge of new clock (LP, XT or HS mode).
7. System clock is switched to external clock source.

5.6.3 CHECKING TWO-SPEED CLOCK STATUS

Checking the state of the OSTS bit of the OSCSTAT register will confirm if the microcontroller is running from the external clock source, as defined by the FOSC<2:0> bits in the Configuration Words, or the internal oscillator.

FIGURE 5-8: TWO-SPEED START-UP

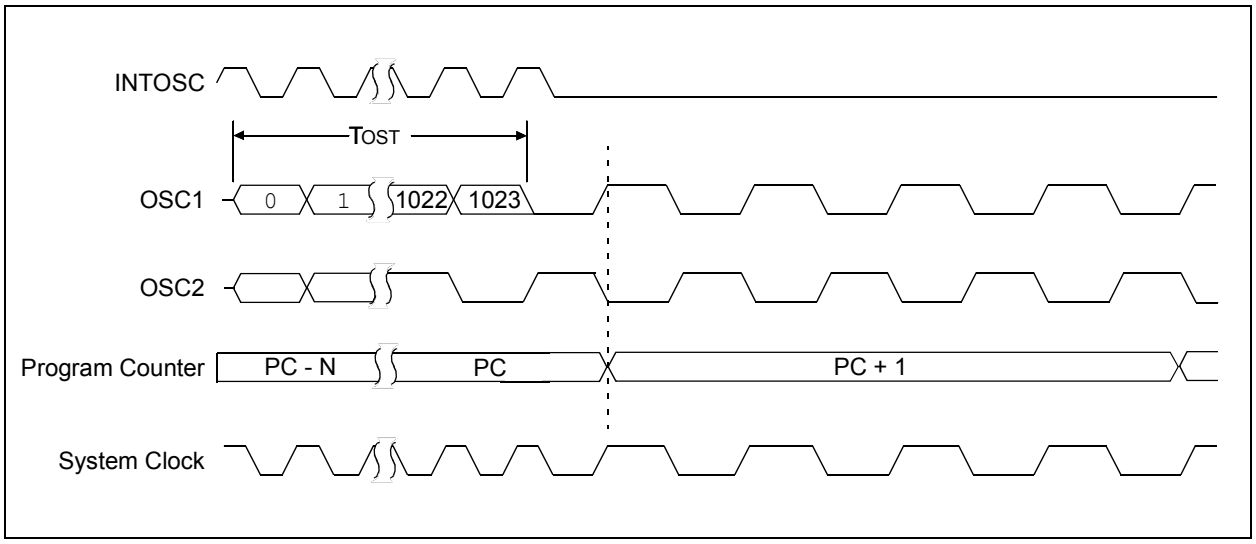

 © 2012 Microchip Technology Inc.

5.7 Fail-Safe Clock Monitor

The Fail-Safe Clock Monitor (FSCM) allows the device to continue operating should the external oscillator fail. The FSCM can detect oscillator failure any time after the Oscillator Start-up Timer (OST) has expired. The FSCM is enabled by setting the FCMEN bit in the Configuration Words. The FSCM is applicable to all external Oscillator modes (LP, XT, HS, EC, RC and secondary oscillator).

FIGURE 5-9: FSCM BLOCK DIAGRAM

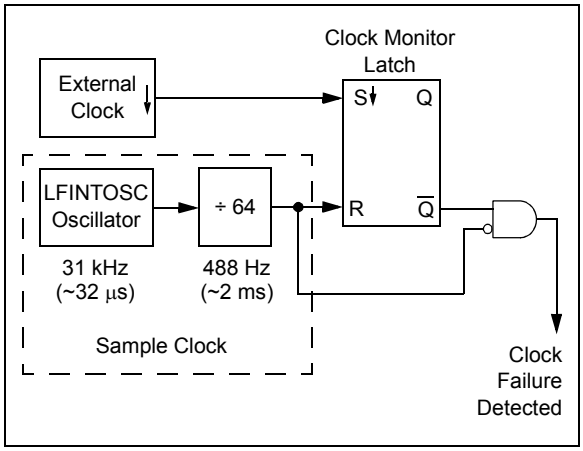

5.7.1 FAIL-SAFE DETECTION

The FSCM module detects a failed oscillator by comparing the external oscillator to the FSCM sample clock. The sample clock is generated by dividing the LFINTOSC by 64. See Figure 5-9. Inside the fail detector block is a latch. The external clock sets the latch on each falling edge of the external clock. The sample clock clears the latch on each rising edge of the sample clock. A failure is detected when an entire half-cycle of the sample clock elapses before the external clock goes low.

5.7.2 FAIL-SAFE OPERATION

When the external clock fails, the FSCM switches the device clock to an internal clock source and sets the bit flag OSFIF of the PIR2 register. Setting this flag will generate an interrupt if the OSFIE bit of the PIE2 register is also set. The device firmware can then take steps to mitigate the problems that may arise from a failed clock. The system clock will continue to be sourced from the internal clock source until the device firmware successfully restarts the external oscillator and switches back to external operation.

The internal clock source chosen by the FSCM is determined by the IRCF<3:0> bits of the OSCCON register. This allows the internal oscillator to be configured before a failure occurs.

5.7.3 FAIL-SAFE CONDITION CLEARING

The Fail-Safe condition is cleared after a Reset, executing a `SLEEP` instruction or changing the SCS bits of the OSCCON register. When the SCS bits are changed, the OST is restarted. While the OST is running, the device continues to operate from the INTOSC selected in OSCCON. When the OST times out, the Fail-Safe condition is cleared after successfully switching to the external clock source. The OSFIF bit should be cleared prior to switching to the external clock source. If the Fail-Safe condition still exists, the OSFIF flag will again become set by hardware.

5.7.4 RESET OR WAKE-UP FROM SLEEP

The FSCM is designed to detect an oscillator failure after the Oscillator Start-up Timer (OST) has expired. The OST is used after waking up from Sleep and after any type of Reset. The OST is not used with the EC or RC Clock modes so that the FSCM will be active as soon as the Reset or wake-up has completed. When the FSCM is enabled, the Two-Speed Start-up is also enabled. Therefore, the device will always be executing code while the OST is operating.

Note:	Due to the wide range of oscillator start-up times, the Fail-Safe circuit is not active during oscillator start-up (i.e., after exiting Reset or Sleep). After an appropriate amount of time, the user should check the Status bits in the OSCSTAT register to verify the oscillator start-up and that the system clock switchover has successfully completed.

FIGURE 5-10: FSCM TIMING DIAGRAM

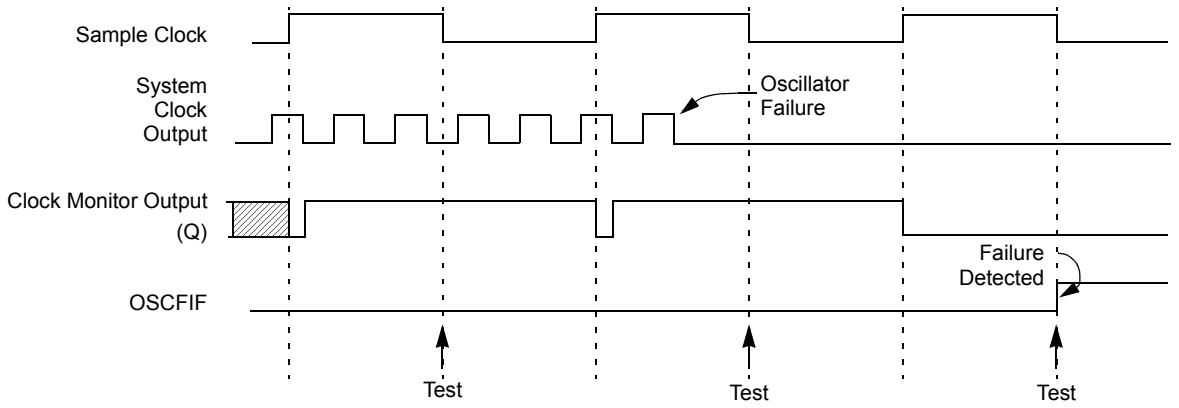

Note: The system clock is normally at a much higher frequency than the sample clock. The relative frequencies in this example have been chosen for clarity.

 © 2012 Microchip Technology Inc.

5.8 Active Clock Tuning (ACT)

The Active Clock Tuning (ACT) continuously adjusts the 16 MHz Internal Oscillator, using an available external reference, to achieve ± 0.20% accuracy. This eliminates the need for a high-speed, high-accuracy external crystal when the system has an available lower speed, lower power, high-accuracy clock source available.

Systems implementing a Real-Time Clock Calendar (RTCC) or a full-speed USB application can take full advantage of the ACT.

5.8.1 ACTIVE CLOCK TUNING OPERATION

The ACT defaults to the disabled state after any Reset. When the ACT is disabled, the user can write to the TUN<6:0> bits in the OSCTUNE register to manually adjust the 16 MHz Internal Oscillator.

The ACT is enabled by setting the ACTEN bit of the ACTCON register. When enabled, the ACT takes control of the OSCTUNE register. The ACT uses the selected ACT reference clock to tune the 16 MHz Internal Oscillator to an accuracy of 16MHz ± 0.2%. The tuning automatically adjusts the OSCTUNE register every reference clock cycle.

Note 1:	When the ACT is enabled, the OSCTUNE register is only updated by the ACT. Writes to the OSCTUNE register by the user are inhibited, but reading the register is permitted.
2:	After disabling the ACT, the user should wait three instructions before writing to the OSCTUNE register.

5.8.2 ACTIVE CLOCK TUNING SOURCE SELECTION

The ACT reference clock is selected with the ACTSRC bit of the ACTCON register. The reference clock sources are provided by the:

- USB module in full-speed operation (ACT_clk)
- Secondary clock at 32.768 kHz (SOSC_clk)

5.8.3 ACT LOCK STATUS

The ACTLOCK bit will be set to '1', when the 16 MHz Internal Oscillator is successfully tuned.
The bit will be cleared by the following conditions:

- Out of Lock condition
- Device Reset
- ACT is disabled

5.8.4 ACT OUT-OF-RANGE STATUS

If the ACT requires an OSCTUNE value outside the range to achieve ± 0.20% accuracy, then the ACT Out-of-Range (ACTOR) Status bit will be set to '1'.

An out-of-range status can occur:

- When the 16 MHz internal oscillator is tuned to its lowest frequency and the next ACT_clk event requests a lower frequency.
- When the 16 MHz internal oscillator is tuned to its highest frequency and the next ACT_clk event requests a higher frequency.

When the ACT out-of-range event occurs, the 16 MHz internal oscillator will continue to use the last written OSCTUNE value. When the OSCTUNE value moves back within the tunable range and ACTLOCK is established, the ACTOR bit is cleared to '0'.

FIGURE 5-11: ACTIVE CLOCK TUNING BLOCK DIAGRAM

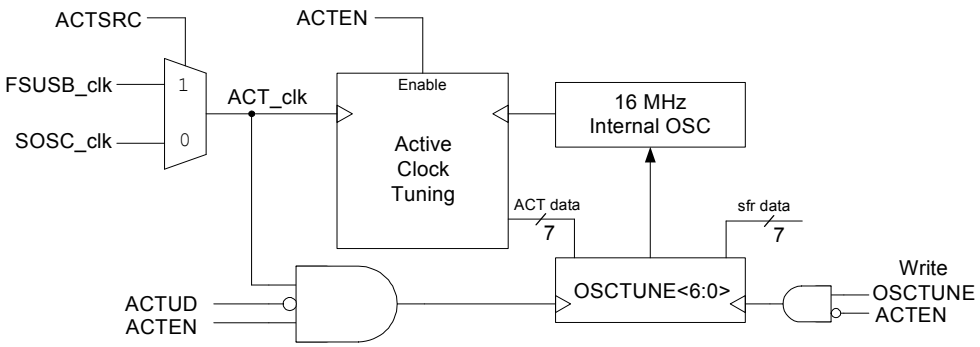

5.8.5 ACTIVE CLOCK TUNING UPDATE DISABLE

When the ACT is enabled, the OSCTUNE register is continuously updated every ACT_clk period. Setting the ACT Update Disable bit can be used to suspend updates to the OSCTUNE register, without disabling the ACT. If the 16 MHz internal oscillator drifts out of the accuracy range, the ACT Status bits will change and an interrupt can be generated to notify the application.

Clearing the ACTUD bit will engage the ACT updates to OSCTUNE and an interrupt can be generated to notify the application.

5.8.6 INTERRUPTS

The ACT will set the ACT Interrupt Flag, (ACTIF) when either of the ACT Status bits (ACTLOCK or ACTORS) change state, regardless if the interrupt is enabled, (ACTIE = `1`). The ACTIF and ACTIE bits are in the PIRx and PIEx registers, respectively. When ACTIE = `1`, an interrupt will be generated whenever the ACT Status bits change.

The ACTIF bit must be cleared in software, regardless of the interrupt enable setting.

5.8.7 OPERATION DURING SLEEP

This ACT does not run during Sleep and will not generate interrupts during Sleep.

 © 2012 Microchip Technology Inc.

5.9 Register Definitions: Oscillator Control

REGISTER 5-1: OSCCON: OSCILLATOR CONTROL REGISTER

R/W-0/0	R/W-0/0	R/W-0/0	R/W-1/1	R/W-1/1	R/W-1/1	R/W-0/0	R/W-0/0
SPLLEN	SPLLMULT	IRCF<3:0>				SCS<1:0>	
bit 7							bit 0

Legend:		
R = Readable bit	W = Writable bit	U = Unimplemented bit, read as ‘0’
u = Bit is unchanged	x = Bit is unknown	-n/n = Value at POR and BOR/Value at all other Resets
‘1’ = Bit is set	‘0’ = Bit is cleared	

bit 7 **SPLLEN:** Software PLL Enable bit
If PLLEN in Configuration Words = 1:
SPLLEN bit is ignored. PLL is always enabled (subject to oscillator requirements)
If PLLEN in Configuration Words = 0:
1 = PLL is enabled
0 = PLL is disabled

bit 6 **SPLLMULT:** Software PLL Multiplier Select bit
1 = 3x PLL is enabled
0 = 4x PLL is enabled

bit 5-2 **IRCF<3:0>:** Internal Oscillator Frequency Select bits
1111 = 16 MHz or 48 MHz HF (see **Section 5.2.2.1 “HFINTOSC”**)
1110 = 8 MHz or 24 MHz HF (3x PLL) or 32 MHz HF (4x PLL) (see **Section 5.2.2.1 “HFINTOSC”**)
1101 = 4 MHz
1100 = 2 MHz
1011 = 1 MHz
1010 = 500 kHz(1)
1001 = 250 kHz(1)
1000 = 125 kHz(1)
0111 = 500 kHz (default upon Reset)
0110 = 250 kHz
0101 = 125 kHz
0100 = 62.5 kHz
001x = 31.25 kHz(1)
000x = 31 kHz LF

bit 1-0 **SCS<1:0>:** System Clock Select bits
1x = Internal oscillator block
01 = Secondary oscillator
00 = Clock determined by FOSC<2:0> in Configuration Words.

Note 1: Duplicate frequency derived from HFINTOSC.

REGISTER 5-2: OSCSTAT: OSCILLATOR STATUS REGISTER

R-1/q	R-0/q	R-q/q	R-0/q	U-0	U-0	R-0/q	R-0/q
SOSCR	PLLRDY	OSTS	HFIOFR	—	—	LFIOFR	HFIOFS
bit 7							bit 0

Legend:		
R = Readable bit	W = Writable bit	U = Unimplemented bit, read as ‘0’
u = Bit is unchanged	x = Bit is unknown	-n/n = Value at POR and BOR/Value at all other Resets
‘1’ = Bit is set	‘0’ = Bit is cleared	q = Conditional

bit 7 **SOSCR:** Secondary Oscillator Ready bit
If T1OSCEN = 1:
1 = Secondary oscillator is ready
0 = Secondary oscillator is not ready
If T1OSCEN = 0:
1 = Timer1 clock source is always ready

bit 6 **PLLRDY:** PLL Ready bit
1 = PLL is ready
0 = PLL is not ready

bit 5 **OSTS:** Oscillator Start-up Timer Status bit
1 = Running from the clock defined by the FOSC<2:0> bits of the Configuration Words
0 = Running from an internal oscillator (FOSC<2:0> = 100)

bit 4 **HFIOFR:** High-Frequency Internal Oscillator Ready bit
1 = HFINTOSC is ready
0 = HFINTOSC is not ready

bit 3-2 **Unimplemented:** Read as ‘0’

bit 1 **LFIOFR:** Low-Frequency Internal Oscillator Ready bit
1 = LFINTOSC is ready
0 = LFINTOSC is not ready

bit 0 **HFIOFS:** High-Frequency Internal Oscillator Stable bit
1 = HFINTOSC 16 MHz Oscillator is stable and is driving the INTOSC
0 = HFINTOSC 16 MHz is not stable, the Start-up Oscillator is driving INTOSC

 © 2012 Microchip Technology Inc.

REGISTER 5-3: OSCTUNE: OSCILLATOR TUNING REGISTER(1,2)

U-0	R/W-0/0	R/W-0/0	R/W-0/0	R/W-0/0	R/W-0/0	R/W-0/0	R/W-0/0
—	TUN<6:0>						
bit 7							bit 0

Legend:		
R = Readable bit	W = Writable bit	U = Unimplemented bit, read as ‘0’
u = Bit is unchanged	x = Bit is unknown	-n/n = Value at POR and BOR/Value at all other Resets
‘1’ = Bit is set	‘0’ = Bit is cleared	

bit 7 **Unimplemented:** Read as ‘0’

bit 6-0 **TUN<6:0>:** Frequency Tuning bits
1000000 = Minimum frequency
•
•
•
1111111 =
0000000 = Oscillator module is running at the factory-calibrated frequency.
0000001 =
•
•
•
0111110 =
0111111 = Maximum frequency

Note 1: When active clock tuning is enabled (ACTSEL = 1) the oscillator is tuned automatically, the user cannot write to OSCTUNE.

2: Oscillator is tuned monotonically.

REGISTER 5-4: ACTCON: ACTIVE CLOCK TUNING (ACT) CONTROL REGISTER

R/W-0/0	R/W-0/0	U-0	R/W-0/0	R-0/0	U-0	R-0/0	U-0
ACTEN	ACTUD	—	ACTSRC(1)	ACTLOCK	—	ACTORS	—
bit 7							bit 0

Legend:		
R = Readable bit	W = Writable bit	U = Unimplemented bit, read as ‘0’
u = Bit is unchanged	x = Bit is unknown	-n/n = Value at POR and BOR/Value at all other Resets
‘1’ = Bit is set	‘0’ = Bit is cleared	

bit 7 **ACTEN:** Active Clock Tuning Selection bit
1 = ACT is enabled, updates to OSCTUNE are exclusive to the ACT
0 = ACT is disabled

bit 6 **ACTUD:** Active Clock Tuning Update Disable bit
1 = Updates to the OSCTUNE register from ACT are disabled
0 = Updates to the OSCTUNE register from ACT are enabled

bit 5 **Unimplemented:** Read as ‘0’

bit 4 **ACTSRC:** Active Clock Tuning Source Selection bit
1 = The HFINTOSC oscillator is tuned using FII-speed USB events
0 = The HFINTOSC oscillator is tuned using the 32.768 kHz oscillator (SOSC) clock source

bit 3 **ACTLOCK:** Active Clock Tuning Lock Status bit
1 = Locked; 16 MHz internal oscillator is within ± 0.20%.Locked
0 = Not locked; 16 MHz internal oscillator tuning has not stabilized within ± 0.20%

bit 2 **Unimplemented:** Read as ‘0’

bit 1 **ACTORS:** Active Clock Tuning Out-of-Range Status bit
1 = Out-of-range; oscillator frequency is outside of the OSCTUNE range
0 = In-range; oscillator frequency is within the OSCTUNE range

bit 0 **Unimplemented:** Read as ‘0’

Note 1: The ACTSRC bit should only be changed when ACTEN = 0.

TABLE 5-4: SUMMARY OF REGISTERS ASSOCIATED WITH CLOCK SOURCES

Name	Bit 7	Bit 6	Bit 5	Bit 4	Bit 3	Bit 2	Bit 1	Bit 0	Register on Page
ACTCON	ACTEN	ACTUD	—	ACTSRC	ACTLOCK	—	ACTORS	—	75
OSCCON	SPLLEN	SPLLMULT	IRCF<3:0>				SCS<1:0>		75
OSCSTAT	SOSCR	PLLRDY	OSTS	HFIOFR	—	—	LFIOFR	HFIOFS	76
OSCTUNE	—	TUNE<6:0>							77
PIR2	OSFIF	C2IF	C1IF	—	BCL1IF	USBIF	ACTIF	—	98
PIE2	OSFIE	C2IE	C1IE	—	BCL1IE	USBIE	ACTIE	—	100
T1CON	TMR1CS<1:0>		T1CKPS<1:0>		T1OSCEN	$\overline{\text{T1SYNC}}$	—	TMR1ON	195

Legend: — = unimplemented location, read as ‘0’. Shaded cells are not used by clock sources.

TABLE 5-5: SUMMARY OF CONFIGURATION WORD WITH CLOCK SOURCES

Name	Bits	Bit -/7	Bit -/6	Bit 13/5	Bit 12/4	Bit 11/3	Bit 10/2	Bit 9/1	Bit 8/0	Register on Page
CONFIG1	13:8	—	—	FCMEN	IESO	$\overline{\text{CLKOUTEN}}$	BOREN<1:0>		—	52
	7:0	$\overline{\text{CP}}$	MCLRE	$\overline{\text{PWRTE}}$	WDTE<1:0>		FOSC<2:0>			

Legend: — = unimplemented location, read as ‘0’. Shaded cells are not used by clock sources.

 © 2012 Microchip Technology Inc.

6.0 RESETS

There are multiple ways to reset this device:

- Power-on Reset (POR)
- Brown-out Reset (BOR)
- Low-Power Brown-out Reset (LPBOR)
- $\overline{\text{MCLR}}$ Reset
- WDT Reset
- RESET instruction
- Stack Overflow
- Stack Underflow
- Programming mode exit

To allow VDD to stabilize, an optional Power-up Timer can be enabled to extend the Reset time after a BOR or POR event.

A simplified block diagram of the on-chip Reset circuit is shown in Figure 6-1.

FIGURE 6-1: SIMPLIFIED BLOCK DIAGRAM OF ON-CHIP RESET CIRCUIT

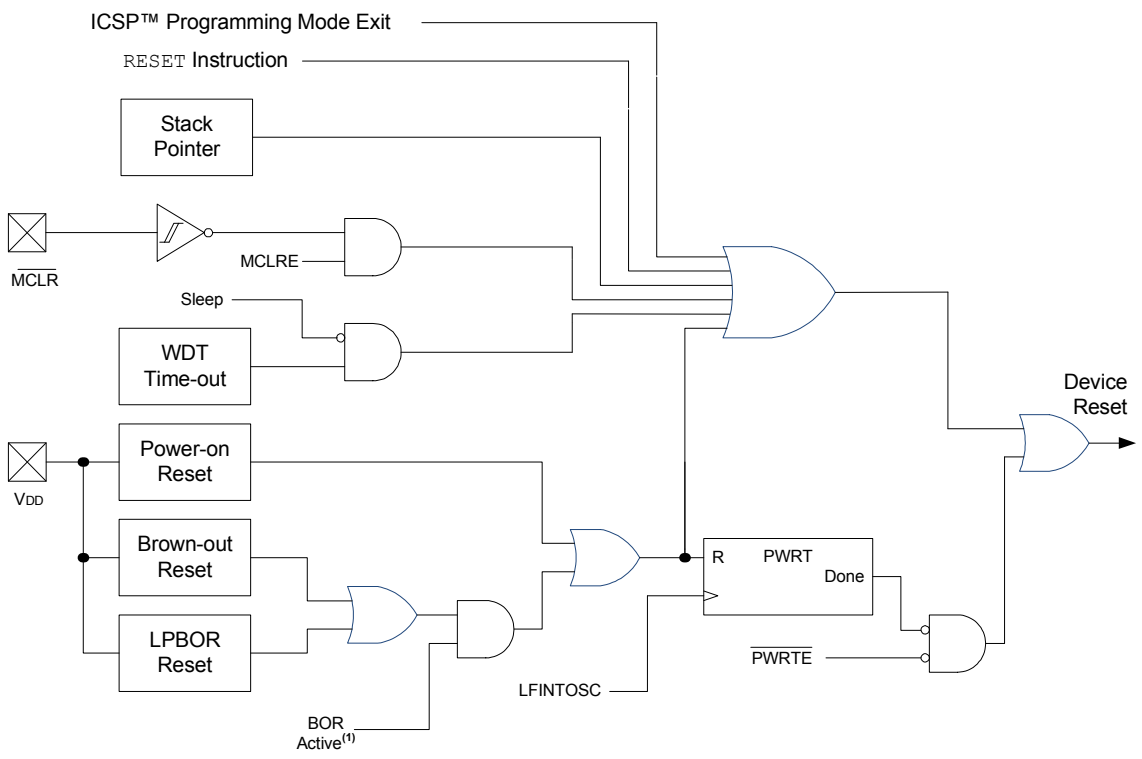

Note 1: See Table 6-1 for BOR active conditions.

6.1 Power-On Reset (POR)

The POR circuit holds the device in Reset until VDD has reached an acceptable level for minimum operation. Slow rising VDD, fast operating speeds or analog performance may require greater than minimum VDD. The PWRT, BOR or MCLR features can be used to extend the start-up period until all device operation conditions have been met.

6.1.1 POWER-UP TIMER (PWRT)

The Power-up Timer provides a nominal 64 ms time-out on POR or Brown-out Reset.

The device is held in Reset as long as PWRT is active. The PWRT delay allows additional time for the VDD to rise to an acceptable level. The Power-up Timer is enabled by clearing the PWRTE bit in Configuration Words.

The Power-up Timer starts after the release of the POR and BOR.

For additional information, refer to Application Note AN607, *"Power-up Trouble Shooting"* (DS00607).

6.2 Brown-Out Reset (BOR)

The BOR circuit holds the device in Reset when VDD reaches a selectable minimum level. Between the POR and BOR, complete voltage range coverage for execution protection can be implemented.

The Brown-out Reset module has four operating modes controlled by the BOREN<1:0> bits in Configuration Words. The four operating modes are:

- BOR is always on
- BOR is off when in Sleep
- BOR is controlled by software
- BOR is always off

Refer to Table 6-1 for more information.

The Brown-out Reset voltage level is selectable by configuring the BORV bit in Configuration Words.

A VDD noise rejection filter prevents the BOR from triggering on small events. If VDD falls below VBOR for a duration greater than parameter TBORDC, the device will reset. See Figure 6-2 for more information.

TABLE 6-1: BOR OPERATING MODES

BOREN<1:0>	SBOREN	Device Mode	BOR Mode	Instruction Execution upon: Release of POR or Wake-up from Sleep
11	X	X	Active	Waits for BOR ready(1) (BORRDY = 1)
10	X	Awake	Active	Waits for BOR ready (BORRDY = 1)
		Sleep	Disabled	
01	1	X	Active	Waits for BOR ready(1) (BORRDY = 1)
	0	X	Disabled	Begins immediately (BORRDY = x)
00	X	X	Disabled	

Note 1: In these specific cases, "release of POR" and "wake-up from Sleep," there is no delay in start-up. The BOR ready flag, (BORRDY = 1), will be set before the CPU is ready to execute instructions because the BOR circuit is forced on by the BOREN<1:0> bits.

6.2.1 BOR IS ALWAYS ON

When the BOREN bits of Configuration Words are programmed to '11', the BOR is always on. The device start-up will be delayed until the BOR is ready and VDD is higher than the BOR threshold.

BOR protection is active during Sleep. The BOR does not delay wake-up from Sleep.

6.2.2 BOR IS OFF IN SLEEP

When the BOREN bits of Configuration Words are programmed to '10', the BOR is on, except in Sleep. The device start-up will be delayed until the BOR is ready and VDD is higher than the BOR threshold.

BOR protection is not active during Sleep. The device wake-up will be delayed until the BOR is ready.

6.2.3 BOR CONTROLLED BY SOFTWARE

When the BOREN bits of Configuration Words are programmed to '01', the BOR is controlled by the SBOREN bit of the BORCON register. The device start-up is not delayed by the BOR ready condition or the VDD level.

BOR protection begins as soon as the BOR circuit is ready. The status of the BOR circuit is reflected in the BORRDY bit of the BORCON register.

BOR protection is unchanged by Sleep.

 © 2012 Microchip Technology Inc.

FIGURE 6-2: BROWN-OUT SITUATIONS

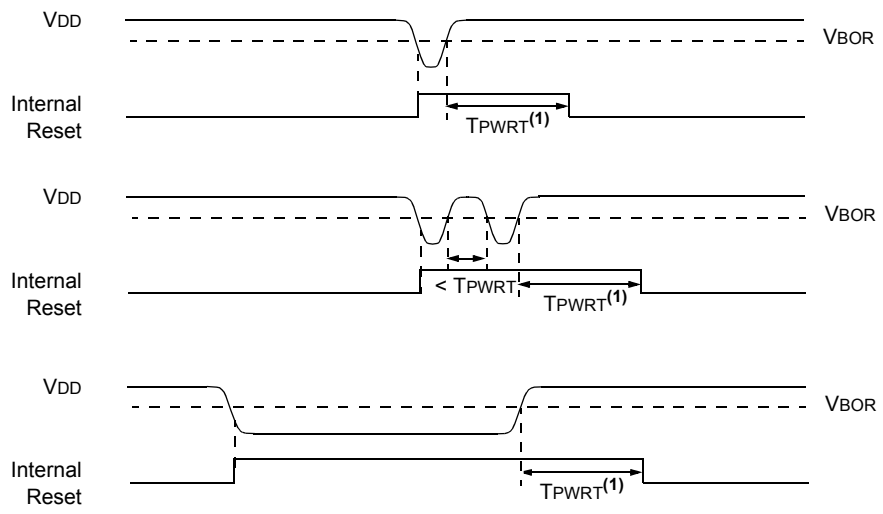

Note 1: TPWRT delay only if $\overline{\text{PWRTE}}$ bit is programmed to '0'.

6.3 Register Definitions: BOR Control

REGISTER 6-1: BORCON: BROWN-OUT RESET CONTROL REGISTER

R/W-1/u	R/W-0/u	U-0	U-0	U-0	U-0	U-0	R-q/u
SBOREN	BORFS	—	—	—	—	—	BORRDY
bit 7							bit 0

Legend:		
R = Readable bit	W = Writable bit	U = Unimplemented bit, read as '0'
u = Bit is unchanged	x = Bit is unknown	-n/n = Value at POR and BOR/Value at all other Resets
'1' = Bit is set	'0' = Bit is cleared	q = Value depends on condition

bit 7 **SBOREN:** Software Brown-out Reset Enable bit
If BOREN <1:0> in Configuration Words = 01:
1 = BOR Enabled
0 = BOR Disabled
If BOREN <1:0> in Configuration Words ≠ 00:
SBOREN is read/write, but has no effect on the BOR.

bit 6 **BORFS:** Brown-out Reset Fast Start bit(1)
If BOREN <1:0> = 10 (Disabled in Sleep) or BOREN<1:0> = 01 (Under software control):
1 = Band gap is forced on always (covers sleep/wake-up/operating cases)
0 = Band gap operates normally, and may turn off
If BOREN<1:0> = 11 (Always on) or BOREN<1:0> = 00 (Always off)
BORFS is Read/Write, but has no effect.

bit 5-1 **Unimplemented:** Read as '0'

bit 0 **BORRDY:** Brown-out Reset Circuit Ready Status bit
1 = The Brown-out Reset circuit is active
0 = The Brown-out Reset circuit is inactive

Note 1: BOREN<1:0> bits are located in Configuration Words.

6.4 Low-Power Brown-out Reset (LPBOR)

The Low-Power Brown-Out Reset (LPBOR) is an essential part of the Reset subsystem. Refer to Figure 6-1 to see how the BOR interacts with other modules.

The LPBOR is used to monitor the external VDD pin. When too low of a voltage is detected, the device is held in Reset. When this occurs, a register bit ($\overline{BOR}$) is changed to indicate that a BOR Reset has occurred. The same bit is set for both the BOR and the LPBOR. Refer to Register 6-2.

6.4.1 ENABLING LPBOR

The LPBOR is controlled by the $\overline{LPBOR}$ bit of Configuration Words. When the device is erased, the LPBOR module defaults to disabled.

6.4.1.1 LPBOR Module Output

The output of the LPBOR module is a signal indicating whether or not a Reset is to be asserted. This signal is OR'd together with the Reset signal of the BOR module to provide the generic $\overline{BOR}$ signal which goes to the PCON register and to the power control block.

6.5 $\overline{MCLR}$

The $\overline{MCLR}$ is an optional external input that can reset the device. The $\overline{MCLR}$ function is controlled by the MCLRE bit of Configuration Words and the LVP bit of Configuration Words (Table 6-2).

TABLE 6-2: $\overline{MCLR}$ CONFIGURATION

MCLRE	LVP	$\overline{MCLR}$
0	0	Disabled
1	0	Enabled
x	1	Enabled

6.5.1 $\overline{MCLR}$ ENABLED

When $\overline{MCLR}$ is enabled and the pin is held low, the device is held in Reset. The $\overline{MCLR}$ pin is connected to VDD through an internal weak pull-up.

The device has a noise filter in the $\overline{MCLR}$ Reset path. The filter will detect and ignore small pulses.

Note: A Reset does not drive the $\overline{MCLR}$ pin low.

6.5.2 $\overline{MCLR}$ DISABLED

When $\overline{MCLR}$ is disabled, the pin functions as a general purpose input and the internal weak pull-up is under software control. See **Section 12.3 "PORTA Registers"** for more information.

6.6 Watchdog Timer (WDT) Reset

The Watchdog Timer generates a Reset if the firmware does not issue a `CLRWDT` instruction within the time-out period. The $\overline{TO}$ and $\overline{PD}$ bits in the STATUS register are changed to indicate the WDT Reset. See **Section 10.0 "Watchdog Timer (WDT)"** for more information.

6.7 `RESET` Instruction

A `RESET` instruction will cause a device Reset. The $\overline{RI}$ bit in the PCON register will be set to '0'. See Table 6-4 for default conditions after a `RESET` instruction has occurred.

6.8 Stack Overflow/Underflow Reset

The device can reset when the Stack Overflows or Underflows. The STKOVF or STKUNF bits of the PCON register indicate the Reset condition. These Resets are enabled by setting the STVREN bit in Configuration Words. See **Section 3.5.2 "Overflow/Underflow Reset"** for more information.

6.9 Programming Mode Exit

Upon exit of Programming mode, the device will behave as if a POR had just occurred.

6.10 Power-Up Timer

The Power-up Timer optionally delays device execution after a BOR or POR event. This timer is typically used to allow VDD to stabilize before allowing the device to start running.

The Power-up Timer is controlled by the $\overline{PWRTE}$ bit of Configuration Words.

6.11 Start-up Sequence

Upon the release of a POR or BOR, the following must occur before the device will begin executing:

1. Power-up Timer runs to completion (if enabled).
2. $\overline{MCLR}$ must be released (if enabled).

The total time-out will vary based on oscillator configuration and Power-up Timer configuration. See **Section 6.0 "Active Clock Tuning (ACT) Module"** for more information.

The Power-up Timer runs independently of $\overline{MCLR}$ Reset. If $\overline{MCLR}$ is kept low long enough, the Power-up Timer will expire. Upon bringing $\overline{MCLR}$ high, the device will begin execution immediately (see Figure 6-3). This is useful for testing purposes or to synchronize more than one device operating in parallel.

 © 2012 Microchip Technology Inc.

FIGURE 6-3: RESET START-UP SEQUENCE

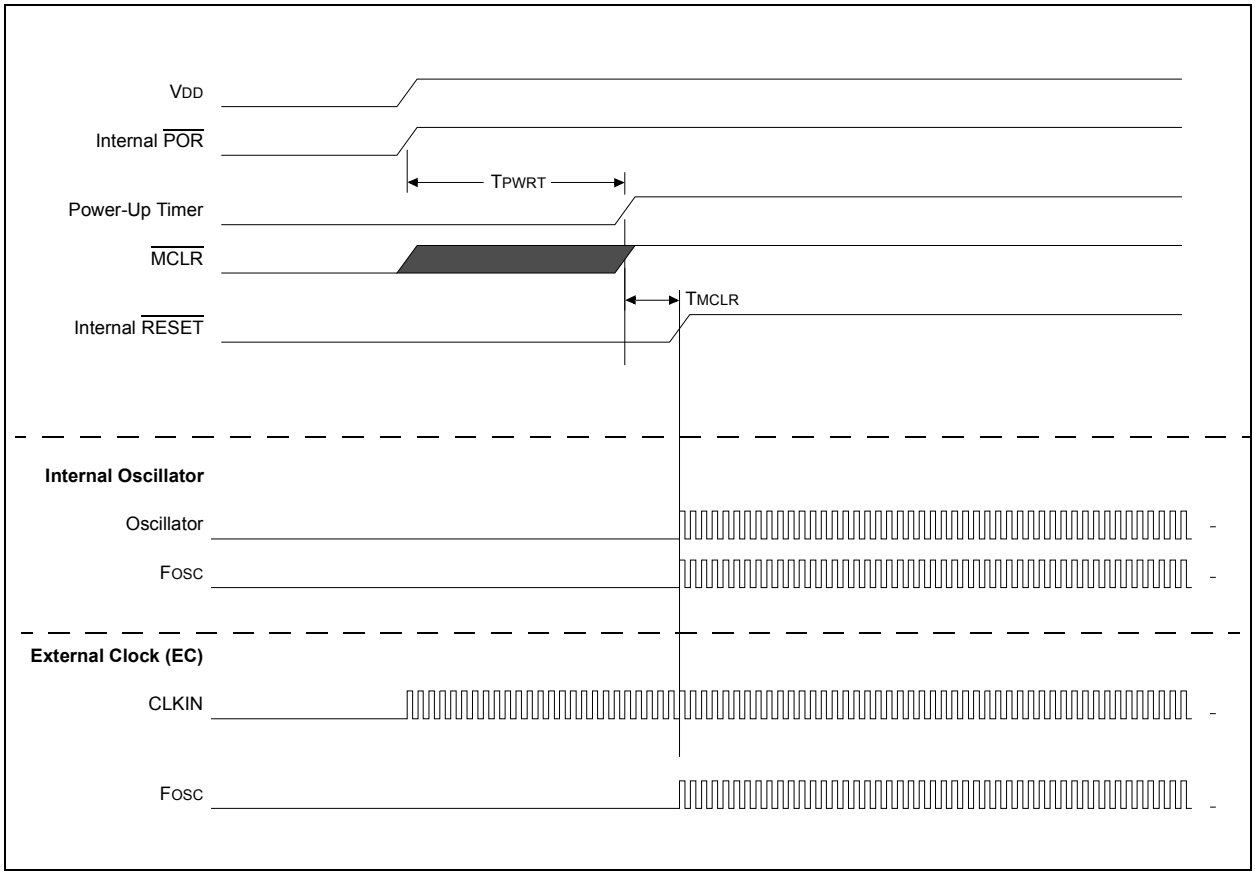

6.12 Determining the Cause of a Reset

Upon any Reset, multiple bits in the STATUS and PCON registers are updated to indicate the cause of the Reset. Table 6-3 and Table 6-4 show the Reset conditions of these registers.

TABLE 6-3: RESET STATUS BITS AND THEIR SIGNIFICANCE

STKOVF	STKUNF	$\overline{\text{RWDT}}$	$\overline{\text{RMCLR}}$	$\overline{\text{RI}}$	$\overline{\text{POR}}$	$\overline{\text{BOR}}$	$\overline{\text{TO}}$	$\overline{\text{PD}}$	Condition
0	0	1	1	1	0	x	1	1	Power-on Reset
0	0	1	1	1	0	x	0	x	Illegal, $\overline{\text{TO}}$ is set on $\overline{\text{POR}}$
0	0	1	1	1	0	x	x	0	Illegal, $\overline{\text{PD}}$ is set on $\overline{\text{POR}}$
0	0	u	1	1	u	0	1	1	Brown-out Reset
u	u	0	u	u	u	u	0	u	WDT Reset
u	u	u	u	u	u	u	0	0	WDT Wake-up from Sleep
u	u	u	u	u	u	u	1	0	Interrupt Wake-up from Sleep
u	u	u	0	u	u	u	u	u	$\overline{\text{MCLR}}$ Reset during normal operation
u	u	u	0	u	u	u	1	0	$\overline{\text{MCLR}}$ Reset during Sleep
u	u	u	u	0	u	u	u	u	RESET Instruction Executed
1	u	u	u	u	u	u	u	u	Stack Overflow Reset (STVREN = 1)
u	1	u	u	u	u	u	u	u	Stack Underflow Reset (STVREN = 1)

TABLE 6-4: RESET CONDITION FOR SPECIAL REGISTERS(2)

Condition	Program Counter	STATUS Register	PCON Register
Power-on Reset	0000h	---1 1000	00-- 110x
$\overline{\text{MCLR}}$ Reset during normal operation	0000h	---u uuuu	uu-- 0uuu
$\overline{\text{MCLR}}$ Reset during Sleep	0000h	---1 0uuu	uu-- 0uuu
WDT Reset	0000h	---0 uuuu	uu-- uuuu
WDT Wake-up from Sleep	PC + 1	---0 0uuu	uu-- uuuu
Brown-out Reset	0000h	---1 1uuu	00-- 11u0
Interrupt Wake-up from Sleep	PC + 1(1)	---1 0uuu	uu-- uuuu
RESET Instruction Executed	0000h	---u uuuu	uu-- u0uu
Stack Overflow Reset (STVREN = 1)	0000h	---u uuuu	1u-- uuuu
Stack Underflow Reset (STVREN = 1)	0000h	---u uuuu	u1-- uuuu

Legend: u = unchanged, x = unknown, - = unimplemented bit, reads as '0'.

Note 1: When the wake-up is due to an interrupt and Global Interrupt Enable bit (GIE) is set, the return address is pushed on the stack and PC is loaded with the interrupt vector (0004h) after execution of PC + 1.

2: If a Status bit is not implemented, that bit will be read as '0'.

 © 2012 Microchip Technology Inc.

6.13 Power Control (PCON) Register

The Power Control (PCON) register contains flag bits to differentiate between a:

- Power-on Reset ($\overline{POR}$)
- Brown-out Reset ($\overline{BOR}$)
- Reset Instruction Reset ($\overline{RI}$)
- $\overline{MCLR}$ Reset ($\overline{RMCLR}$)
- Watchdog Timer Reset ($\overline{RWDT}$)
- Stack Underflow Reset (STKUNF)
- Stack Overflow Reset (STKOVF)

The PCON register bits are shown in Register 6-2.

6.14 Register Definitions: Power Control

REGISTER 6-2: PCON: POWER CONTROL REGISTER

R/W/HS-0/q	R/W/HS-0/q	U-0	R/W/HC-1/q	R/W/HC-1/q	R/W/HC-1/q	R/W/HC-q/u	R/W/HC-q/u
STKOVF	STKUNF	—	$\overline{RWDT}$	$\overline{RMCLR}$	$\overline{RI}$	$\overline{POR}$	$\overline{BOR}$
bit 7							bit 0

Legend:		
HC = Bit is cleared by hardware		HS = Bit is set by hardware
R = Readable bit	W = Writable bit	U = Unimplemented bit, read as ‘0’
u = Bit is unchanged	x = Bit is unknown	-n/n = Value at POR and BOR/Value at all other Resets
‘1’ = Bit is set	‘0’ = Bit is cleared	q = Value depends on condition

bit 7 **STKOVF:** Stack Overflow Flag bit
1 = A Stack Overflow occurred
0 = A Stack Overflow has not occurred or cleared by firmware

bit 6 **STKUNF:** Stack Underflow Flag bit
1 = A Stack Underflow occurred
0 = A Stack Underflow has not occurred or cleared by firmware

bit 5 **Unimplemented:** Read as ‘0’

bit 4 **$\overline{RWDT}$:** Watchdog Timer Reset Flag bit
1 = A Watchdog Timer Reset has not occurred or set by firmware
0 = A Watchdog Timer Reset has occurred (cleared by hardware)

bit 3 **$\overline{RMCLR}$:** $\overline{MCLR}$ Reset Flag bit
1 = A $\overline{MCLR}$ Reset has not occurred or set by firmware
0 = A $\overline{MCLR}$ Reset has occurred (cleared by hardware)

bit 2 **$\overline{RI}$:** RESET Instruction Flag bit
1 = A RESET instruction has not been executed or set by firmware
0 = A RESET instruction has been executed (cleared by hardware)

bit 1 **$\overline{POR}$:** Power-on Reset Status bit
1 = No Power-on Reset occurred
0 = A Power-on Reset occurred (must be set in software after a Power-on Reset occurs)

bit 0 **$\overline{BOR}$:** Brown-out Reset Status bit
1 = No Brown-out Reset occurred
0 = A Brown-out Reset occurred (must be set in software after a Power-on Reset or Brown-out Reset occurs)

TABLE 6-5: SUMMARY OF REGISTERS ASSOCIATED WITH RESETS

Name	Bit 7	Bit 6	Bit 5	Bit 4	Bit 3	Bit 2	Bit 1	Bit 0	Register on Page
BORCON	SBOREN	BORFS	—	—	—	—	—	BORRDY	81
PCON	STKOVF	STKUNF	—	$\overline{\text{RWDT}}$	$\overline{\text{RMCLR}}$	$\overline{\text{RI}}$	$\overline{\text{POR}}$	$\overline{\text{BOR}}$	85
STATUS	—	—	—	$\overline{\text{TO}}$	$\overline{\text{PD}}$	Z	DC	C	27
WDTCON	—	—	WDTPS<4:0>					SWDTEN	110

Legend: — = unimplemented bit, reads as '0'. Shaded cells are not used by Resets.

Note 1: Other (non Power-up) Resets include $\overline{\text{MCLR}}$ Reset and Watchdog Timer Reset during normal operation.

TABLE 6-6: SUMMARY OF CONFIGURATION WORD WITH RESETS

Name	Bits	Bit -/7	Bit -/6	Bit 13/5	Bit 12/4	Bit 11/3	Bit 10/2	Bit 9/1	Bit 8/0	Register on Page
CONFIG1	13:8	—	—	FCMEN	IESO	$\overline{\text{CLKOUTEN}}$	BOREN<1:0>		—	52
	7:0	$\overline{\text{CP}}$	MCLRE	$\overline{\text{PWRTE}}$	WDTE<1:0>		FOSC<2:0>			
CONFIG2	13:8	—	—	LVP	$\overline{\text{DEBUG}}$	$\overline{\text{LPBOR}}$	BORV	STVREN	PLLEN	54
	7:0	PLLMULT	USBLSCLK	CPUDIV<1:0>		—	—	WRT<1:0>		

Legend: — = unimplemented location, read as '0'. Shaded cells are not used by Resets.

 © 2012 Microchip Technology Inc.

7.0 REFERENCE CLOCK MODULE

The reference clock module provides the ability to send a divided clock to the clock output pin of the device (CLKR). This module is available in all oscillator configurations and allows the user to select a greater range of clock submultiples to drive external devices in the application. The reference clock module includes the following features:

- System clock is the source
- Available in all oscillator configurations
- Programmable clock divider
- Output enable to a port pin
- Selectable duty cycle
- Slew rate control

The reference clock module is controlled by the CLKRCON register (Register 7-1) and is enabled when setting the CLKREN bit. To output the divided clock signal to the CLKR port pin, the CLKROE bit must be set. The CLKRDIV<2:0> bits enable the selection of eight different clock divider options. The CLKRDC<1:0> bits can be used to modify the duty cycle of the output clock(1). The CLKRSLR bit controls slew rate limiting.

Note 1:	If the base clock rate is selected without a divider, the output clock will always have a duty cycle equal to that of the source clock, unless a 0% duty cycle is selected. If the clock divider is set to base clock/2, then 25% and 75% duty cycle accuracy will be dependent upon the source clock.

7.1 Slew Rate

The slew rate limitation on the output port pin can be disabled. The slew rate limitation can be removed by clearing the CLKRSLR bit in the CLKRCON register.

7.2 Effects of a Reset

Upon any device Reset, the reference clock module is disabled. The user's firmware is responsible for initializing the module before enabling the output. The registers are reset to their default values.

7.3 Conflicts with the CLKR Pin

There are two cases when the reference clock output signal cannot be output to the CLKR pin, if:

- LP, XT or HS Oscillator mode is selected.
- CLKOUT function is enabled.

7.3.1 OSCILLATOR MODES

If LP, XT or HS Oscillator modes are selected, the OSC2/CLKR pin must be used as an oscillator input pin and the CLKR output cannot be enabled. See **Section 5.2 "Clock Source Types"** for more information on different oscillator modes.

7.3.2 CLKOUT FUNCTION

The CLKOUT function has a higher priority than the reference clock module. Therefore, if the CLKOUT function is enabled by the $\overline{\text{CLKOUTEN}}$ bit in Configuration Words, FOSC/4 will always be output on the port pin. Reference **Section 4.0 "Device Configuration"** for more information.

7.4 Operation During Sleep

As the reference clock module relies on the system clock as its source, and the system clock is disabled in Sleep, the module does not function in Sleep, even if an external clock source or the Timer1 clock source is configured as the system clock. The module outputs will remain in their current state until the device exits Sleep.

7.5 Register Definition: Reference Clock Control

REGISTER 7-1: CLKRCON: REFERENCE CLOCK CONTROL REGISTER

R/W-0/0	R/W-0/0	R/W-1/1	R/W-1/1	R/W-0/0	R/W-0/0	R/W-0/0	R/W-0/0
CLKREN	CLKROE	CLKRSLR	CLKRDC<1:0>		CLKRDIV<2:0>		
bit 7							bit 0

Legend:		
R = Readable bit	W = Writable bit	U = Unimplemented bit, read as ‘0’
u = Bit is unchanged	x = Bit is unknown	-n/n = Value at POR and BOR/Value at all other Resets
‘1’ = Bit is set	‘0’ = Bit is cleared	

bit 7 **CLKREN:** Reference Clock Module Enable bit
- 1 = Reference clock module is enabled
- 0 = Reference clock module is disabled

bit 6 **CLKROE:** Reference Clock Output Enable bit(3)
- 1 = Reference clock output is enabled on CLKR pin
- 0 = Reference clock output disabled on CLKR pin

bit 5 **CLKRSLR:** Reference Clock Slew Rate Control limiting enable bit
- 1 = Slew rate limiting is enabled
- 0 = Slew rate limiting is disabled

bit 4-3 **CLKRDC<1:0>:** Reference Clock Duty Cycle bits
- 11 = Clock outputs duty cycle of 75%
- 10 = Clock outputs duty cycle of 50%
- 01 = Clock outputs duty cycle of 25%
- 00 = Clock outputs duty cycle of 0%

bit 2-0 **CLKRDIV<2:0>** Reference Clock Divider bits
- 111 = Base clock value divided by 128
- 110 = Base clock value divided by 64
- 101 = Base clock value divided by 32
- 100 = Base clock value divided by 16
- 011 = Base clock value divided by 8
- 010 = Base clock value divided by 4
- 001 = Base clock value divided by 2(1)
- 000 = Base clock value(2)

Note 1: In this mode, the 25% and 75% duty cycle accuracy will be dependent on the source clock duty cycle.

2: In this mode, the duty cycle will always be equal to the source clock duty cycle, unless a duty cycle of 0% is selected.

3: To route CLKR to pin, $\overline{\text{CLKOUTEN}}$ of Configuration Words = 1 is required. $\overline{\text{CLKOUTEN}}$ of Configuration Words = 0 will result in FOSC/4. See **Section 7.3 “Conflicts with the CLKR Pin”** for details.

 © 2012 Microchip Technology Inc.

TABLE 7-1: SUMMARY OF REGISTERS ASSOCIATED WITH REFERENCE CLOCK SOURCES

Name	Bit 7	Bit 6	Bit 5	Bit 4	Bit 3	Bit 2	Bit 1	Bit 0	Register on Page
CLKRCON	CLKREN	CLKROE	CLKRSLR	CLKRDC<1:0>		CLKRDIV<2:0>			88

Legend: — = unimplemented locations read as '0'. Shaded cells are not used by reference clock sources.

TABLE 7-2: SUMMARY OF CONFIGURATION WORD WITH REFERENCE CLOCK SOURCES

Name	Bits	Bit -/7	Bit -/6	Bit 13/5	Bit 12/4	Bit 11/3	Bit 10/2	Bit 9/1	Bit 8/0	Register on Page
CONFIG1	13:8	—	—	FCMEN	IESO	$\overline{\text{CLKOUTEN}}$	BOREN<1:0>		$\overline{\text{CPD}}$	52
	7:0	$\overline{\text{CP}}$	MCLRE	$\overline{\text{PWRTE}}$	WDTE<1:0>		FOSC<2:0>			

Legend: — = unimplemented locations read as '0'. Shaded cells are not used by reference clock sources.

NOTES:

 © 2012 Microchip Technology Inc.

8.0 INTERRUPTS

The interrupt feature allows certain events to preempt normal program flow. Firmware is used to determine the source of the interrupt and act accordingly. Some interrupts can be configured to wake the MCU from Sleep mode.

This chapter contains the following information for Interrupts:

- Operation
- Interrupt Latency
- Interrupts During Sleep
- INT Pin
- Automatic Context Saving

Many peripherals produce interrupts. Refer to the corresponding chapters for details.

A block diagram of the interrupt logic is shown in Figure 8-1.

FIGURE 8-1: INTERRUPT LOGIC

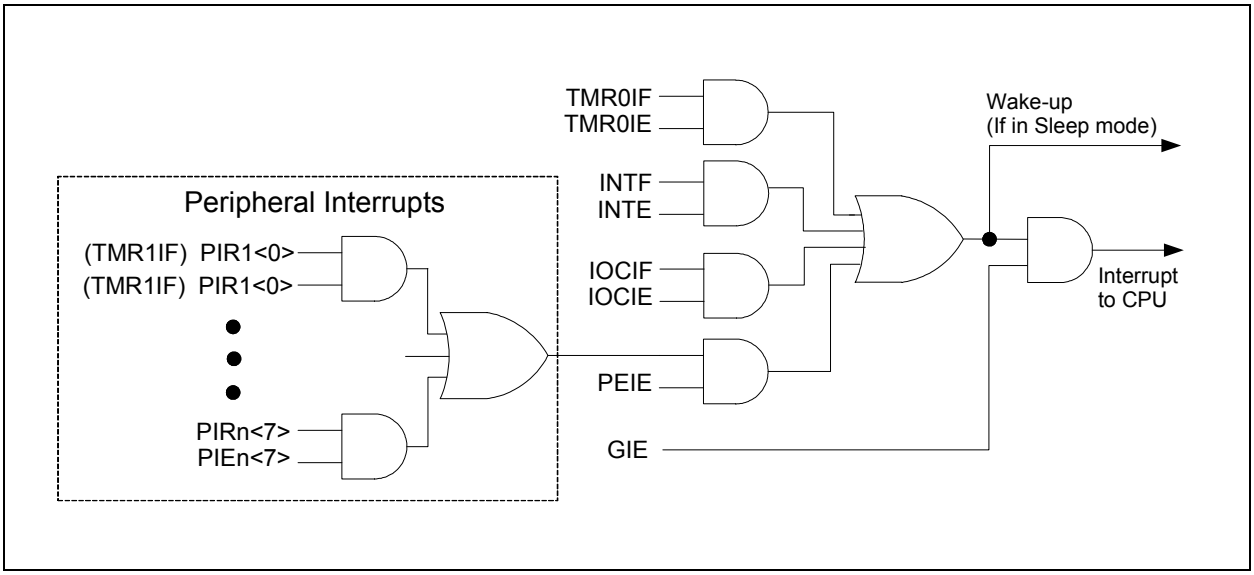

8.1 Operation

Interrupts are disabled upon any device Reset. They are enabled by setting the following bits:

- GIE bit of the INTCON register
- Interrupt Enable bit(s) for the specific interrupt event(s)
- PEIE bit of the INTCON register (if the Interrupt Enable bit of the interrupt event is contained in the PIE1 and PIE2 registers)

The INTCON, PIR1 and PIR2 registers record individual interrupts via interrupt flag bits. Interrupt flag bits will be set, regardless of the status of the GIE, PEIE and individual interrupt enable bits.

The following events happen when an interrupt event occurs while the GIE bit is set:

- Current prefetched instruction is flushed
- GIE bit is cleared
- Current Program Counter (PC) is pushed onto the stack
- Critical registers are automatically saved to the shadow registers (See **"Section 8.5 "Automatic Context Saving"."**)
- PC is loaded with the interrupt vector 0004h

The firmware within the Interrupt Service Routine (ISR) should determine the source of the interrupt by polling the interrupt flag bits. The interrupt flag bits must be cleared before exiting the ISR to avoid repeated interrupts. Because the GIE bit is cleared, any interrupt that occurs while executing the ISR will be recorded through its interrupt flag, but will not cause the processor to redirect to the interrupt vector.

The `RETFIE` instruction exits the ISR by popping the previous address from the stack, restoring the saved context from the shadow registers and setting the GIE bit.

For additional information on a specific interrupt's operation, refer to its peripheral chapter.

Note 1: Individual interrupt flag bits are set, regardless of the state of any other enable bits.

2: All interrupts will be ignored while the GIE bit is cleared. Any interrupt occurring while the GIE bit is clear will be serviced when the GIE bit is set again.

8.2 Interrupt Latency

Interrupt latency is defined as the time from when the interrupt event occurs to the time code execution at the interrupt vector begins. The latency for synchronous interrupts is three or four instruction cycles. For asynchronous interrupts, the latency is three to five instruction cycles, depending on when the interrupt occurs. See Figure 8-2 and Figure 8.3 for more details.

 © 2012 Microchip Technology Inc.

FIGURE 8-2: INTERRUPT LATENCY

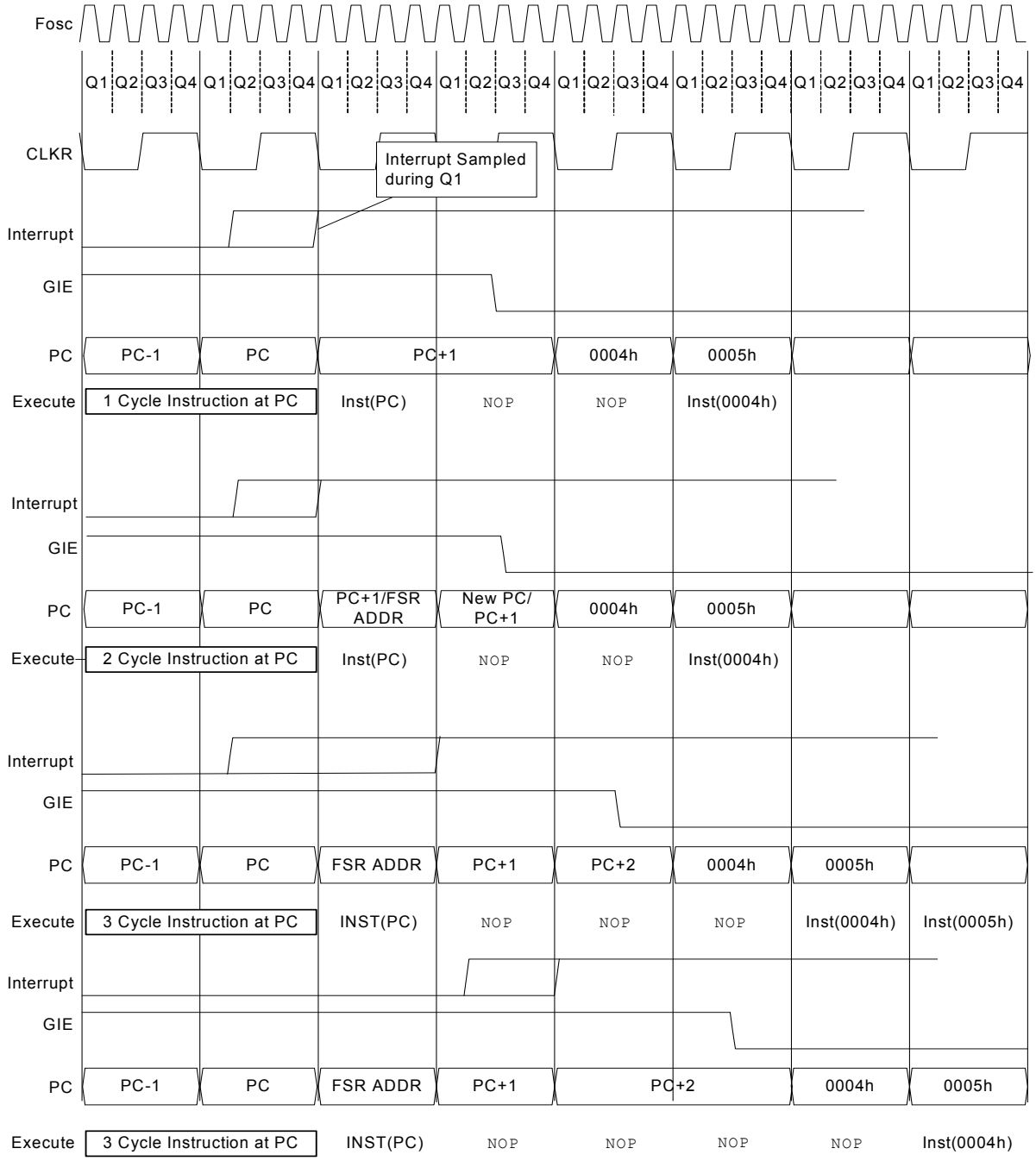

FIGURE 8-3: INT PIN INTERRUPT TIMING

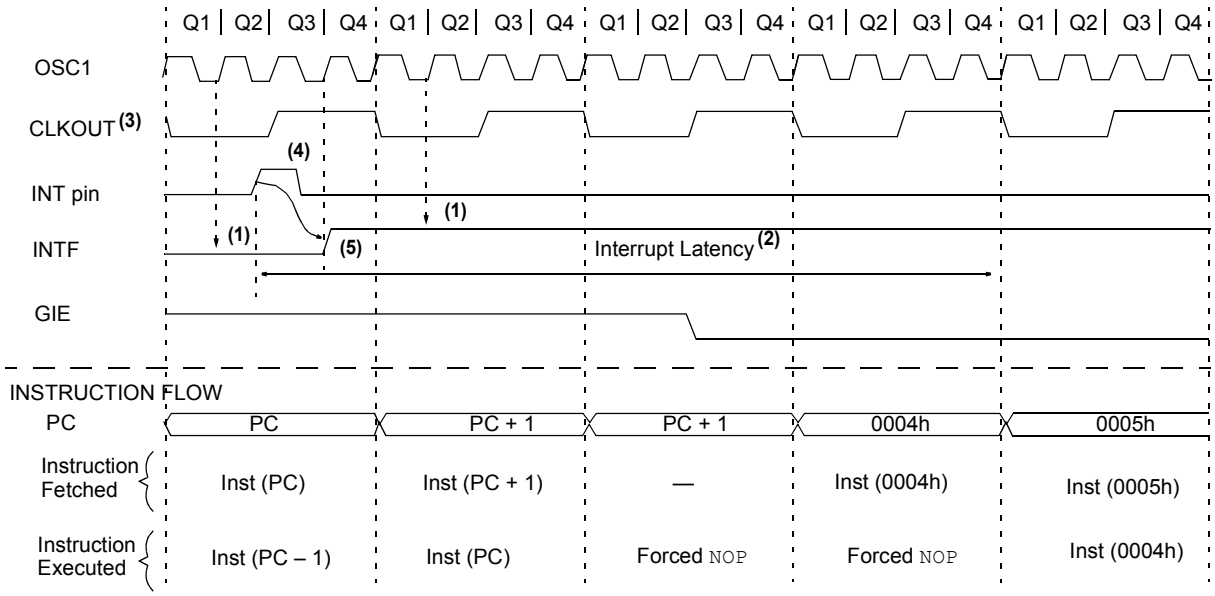

Note 1: INTF flag is sampled here (every Q1).

2: Asynchronous interrupt latency = 3-5 TCY. Synchronous latency = 3-4 TCY, where TCY = instruction cycle time. Latency is the same whether Inst (PC) is a single cycle or a 2-cycle instruction.

3: CLKOUT not available in all oscillator modes.

4: For minimum width of INT pulse, refer to AC specifications in **Section 29.0 "Electrical Specifications"**

5: INTF is enabled to be set any time during the Q4-Q1 cycles.

 © 2012 Microchip Technology Inc.

8.3 Interrupts During Sleep

Some interrupts can be used to wake from Sleep. To wake from Sleep, the peripheral must be able to operate without the system clock. The interrupt source must have the appropriate Interrupt Enable bit(s) set prior to entering Sleep.

On waking from Sleep, if the GIE bit is also set, the processor will branch to the interrupt vector. Otherwise, the processor will continue executing instructions after the `SLEEP` instruction. The instruction directly after the `SLEEP` instruction will always be executed before branching to the ISR. Refer to **Section 9.0 "Power-Down Mode (Sleep)"** for more details.

8.4 INT Pin

The INT pin can be used to generate an asynchronous edge-triggered interrupt. This interrupt is enabled by setting the INTE bit of the INTCON register. The INTEDG bit of the OPTION_REG register determines on which edge the interrupt will occur. When the INTEDG bit is set, the rising edge will cause the interrupt. When the INTEDG bit is clear, the falling edge will cause the interrupt. The INTF bit of the INTCON register will be set when a valid edge appears on the INT pin. If the GIE and INTE bits are also set, the processor will redirect program execution to the interrupt vector.

8.5 Automatic Context Saving

Upon entering an interrupt, the return PC address is saved on the stack. Additionally, the following registers are automatically saved in the shadow registers:

- W register
- STATUS register (except for $\overline{TO}$ and $\overline{PD}$)
- BSR register
- FSR registers
- PCLATH register

Upon exiting the Interrupt Service Routine, these registers are automatically restored. Any modifications to these registers during the ISR will be lost. If modifications to any of these registers are desired, the corresponding shadow register should be modified and the value will be restored when exiting the ISR. The shadow registers are available in Bank 31 and are readable and writable. Depending on the user's application, other registers may also need to be saved.

8.6 Register Definitions: Interrupt Control

REGISTER 8-1: INTCON: INTERRUPT CONTROL REGISTER

R/W-0/0	R/W-0/0	R/W-0/0	R/W-0/0	R/W-0/0	R/W-0/0	R/W-0/0	R-0/0
GIE	PEIE	TMR0IE	INTE	IOCIE	TMR0IF	INTF	IOCIF(1)
bit 7							bit 0

Legend:		
R = Readable bit	W = Writable bit	U = Unimplemented bit, read as ‘0’
u = Bit is unchanged	x = Bit is unknown	-n/n = Value at POR and BOR/Value at all other Resets
‘1’ = Bit is set	‘0’ = Bit is cleared	

bit 7 **GIE:** Global Interrupt Enable bit
1 = Enables all active interrupts
0 = Disables all interrupts

bit 6 **PEIE:** Peripheral Interrupt Enable bit
1 = Enables all active peripheral interrupts
0 = Disables all peripheral interrupts

bit 5 **TMR0IE:** Timer0 Overflow Interrupt Enable bit
1 = Enables the Timer0 interrupt
0 = Disables the Timer0 interrupt

bit 4 **INTE:** INT External Interrupt Enable bit
1 = Enables the INT external interrupt
0 = Disables the INT external interrupt

bit 3 **IOCIE:** Interrupt-on-Change Enable bit
1 = Enables the interrupt-on-change
0 = Disables the interrupt-on-change

bit 2 **TMR0IF:** Timer0 Overflow Interrupt Flag bit
1 = TMR0 register has overflowed
0 = TMR0 register did not overflow

bit 1 **INTF:** INT External Interrupt Flag bit
1 = The INT external interrupt occurred
0 = The INT external interrupt did not occur

bit 0 **IOCIF:** Interrupt-on-Change Interrupt Flag bit(1)
1 = When at least one of the interrupt-on-change pins changed state
0 = None of the interrupt-on-change pins have changed state

Note 1: The IOCIF Flag bit is read-only and cleared when all the interrupt-on-change flags in the IOCBF register have been cleared by software.

Note: Interrupt flag bits are set when an interrupt condition occurs, regardless of the state of its corresponding enable bit or the Global Interrupt Enable bit, GIE, of the INTCON register. User software should ensure the appropriate interrupt flag bits are clear prior to enabling an interrupt.

 © 2012 Microchip Technology Inc.

REGISTER 8-2: PIE1: PERIPHERAL INTERRUPT ENABLE REGISTER 1

R/W-0/0	R/W-0/0	R/W-0/0	R/W-0/0	R/W-0/0	U-0	R/W-0/0	R/W-0/0
TMR1GIE	ADIE(1)	RCIE	TXIE	SSP1IE	—	TMR2IE	TMR1IE
bit 7							bit 0

Legend:		
R = Readable bit	W = Writable bit	U = Unimplemented bit, read as ‘0’
u = Bit is unchanged	x = Bit is unknown	-n/n = Value at POR and BOR/Value at all other Resets
‘1’ = Bit is set	‘0’ = Bit is cleared	

bit 7 **TMR1GIE:** Timer1 Gate Interrupt Enable bit
1 = Enables the Timer1 gate acquisition interrupt
0 = Disables the Timer1 gate acquisition interrupt

bit 6 **ADIE:** A/D Converter (ADC) Interrupt Enable bit
1 = Enables the ADC interrupt
0 = Disables the ADC interrupt

bit 5 **RCIE:** USART Receive Interrupt Enable bit
1 = Enables the USART receive interrupt
0 = Disables the USART receive interrupt

bit 4 **TXIE:** USART Transmit Interrupt Enable bit
1 = Enables the USART transmit interrupt
0 = Disables the USART transmit interrupt

bit 3 **SSP1IE:** Synchronous Serial Port (MSSP) Interrupt Enable bit
1 = Enables the MSSP interrupt
0 = Disables the MSSP interrupt

bit 2 **Unimplemented:** Read as ‘0’

bit 1 **TMR2IE:** TMR2 to PR2 Match Interrupt Enable bit
1 = Enables the Timer2 to PR2 match interrupt
0 = Disables the Timer2 to PR2 match interrupt

bit 0 **TMR1IE:** Timer1 Overflow Interrupt Enable bit
1 = Enables the Timer1 overflow interrupt
0 = Disables the Timer1 overflow interrupt

Note 1: PIC16(L)F1455/9 only.

Note: Bit PEIE of the INTCON register must be set to enable any peripheral interrupt.

REGISTER 8-3: PIE2: PERIPHERAL INTERRUPT ENABLE REGISTER 2

R/W-0/0	R/W-0/0	R/W-0/0	U-0	R/W-0/0	R/W-0/0	R/W-0/0	U-0
OSFIE	C2IE	C1IE	—	BCL1IE	USBIE	ACTIE	—
bit 7							bit 0

Legend:		
R = Readable bit	W = Writable bit	U = Unimplemented bit, read as ‘0’
u = Bit is unchanged	x = Bit is unknown	-n/n = Value at POR and BOR/Value at all other Resets
‘1’ = Bit is set	‘0’ = Bit is cleared	

bit 7 **OSFIE:** Oscillator Fail Interrupt Enable bit
1 = Enables the Oscillator Fail interrupt
0 = Disables the Oscillator Fail interrupt

bit 6 **C2IE:** Comparator C2 Interrupt Enable bit
1 = Enables the Comparator C2 interrupt
0 = Disables the Comparator C2 interrupt

bit 5 **C1IE:** Comparator C1 Interrupt Enable bit
1 = Enables the Comparator C1 interrupt
0 = Disables the Comparator C1 interrupt

bit 4 **Unimplemented:** Read as ‘0’

bit 3 **BCL1IE:** MSSP Bus Collision Interrupt Enable bit
1 = Enables the MSSP Bus Collision Interrupt
0 = Disables the MSSP Bus Collision Interrupt

bit 2 **USBIE:** USB Interrupt Enable bit
1 = Enables the USB interrupt
0 = Disables the USB interrupt

bit 1 **ACTIE:** Active Clock Tuning Interrupt Enable bit
1 = Enables the Active Clock Tuning interrupt
0 = Disables the Active Clock Tuning interrupt

bit 0 **Unimplemented:** Read as ‘0’

Note: Bit PEIE of the INTCON register must be set to enable any peripheral interrupt.

 © 2012 Microchip Technology Inc.

REGISTER 8-4: PIR1: PERIPHERAL INTERRUPT REQUEST REGISTER 1

R/W-0/0	R/W-0/0	R/W-0/0	R/W-0/0	R/W-0/0	U-0	R/W-0/0	R/W-0/0
TMR1GIF	ADIF(1)	RCIF	TXIF	SSP1IF	—	TMR2IF	TMR1IF
bit 7							bit 0

Legend:		
R = Readable bit	W = Writable bit	U = Unimplemented bit, read as ‘0’
u = Bit is unchanged	x = Bit is unknown	-n/n = Value at POR and BOR/Value at all other Resets
‘1’ = Bit is set	‘0’ = Bit is cleared	

bit 7 **TMR1GIF:** Timer1 Gate Interrupt Flag bit
1 = Interrupt is pending
0 = Interrupt is not pending

bit 6 **ADIF:** A/D Converter Interrupt Flag bit
1 = Interrupt is pending
0 = Interrupt is not pending

bit 5 **RCIF:** USART Receive Interrupt Flag bit
1 = Interrupt is pending
0 = Interrupt is not pending

bit 4 **TXIF:** USART Transmit Interrupt Flag bit
1 = Interrupt is pending
0 = Interrupt is not pending

bit 3 **SSP1IF:** Synchronous Serial Port (MSSP) Interrupt Flag bit
1 = Interrupt is pending
0 = Interrupt is not pending

bit 2 **Unimplemented:** Read as ‘0’

bit 1 **TMR2IF:** Timer2 to PR2 Interrupt Flag bit
1 = Interrupt is pending
0 = Interrupt is not pending

bit 0 **TMR1IF:** Timer1 Overflow Interrupt Flag bit
1 = Interrupt is pending
0 = Interrupt is not pending

Note 1: PIC16(L)F1455/9 only.

Note: Interrupt flag bits are set when an interrupt condition occurs, regardless of the state of its corresponding enable bit or the Global Interrupt Enable bit, GIE, of the INTCON register. User software should ensure the appropriate interrupt flag bits are clear prior to enabling an interrupt.

REGISTER 8-5: PIR2: PERIPHERAL INTERRUPT REQUEST REGISTER 2

R/W-0/0	R/W-0/0	R/W-0/0	U-0	R/W-0/0	R/W-0/0	R/W-0/0	U-0
OSFIF	C2IF	C1IF	—	BCL1IF	USBIF	ACTIF	—
bit 7							bit 0

Legend:		
R = Readable bit	W = Writable bit	U = Unimplemented bit, read as ‘0’
u = Bit is unchanged	x = Bit is unknown	-n/n = Value at POR and BOR/Value at all other Resets
‘1’ = Bit is set	‘0’ = Bit is cleared	

bit 7 **OSFIF:** Oscillator Fail Interrupt Flag bit
1 = Interrupt is pending
0 = Interrupt is not pending

bit 6 **C2IF:** Numerically Controlled Oscillator Flag bit
1 = Interrupt is pending
0 = Interrupt is not pending

bit 5 **C1IF:** Numerically Controlled Oscillator Flag bit
1 = Interrupt is pending
0 = Interrupt is not pending

bit 4 **Unimplemented:** Read as ‘0’

bit 3 **BCL1IF:** MSSP Bus Collision Interrupt Flag bit
1 = Interrupt is pending
0 = Interrupt is not pending

bit 2 **USBIF:** USB Flag bit
1 = Interrupt is pending
0 = Interrupt is not pending

bit 1 **ACTIF:** Active Clock Tuning Interrupt Flag bit
1 = Interrupt is pending
0 = Interrupt is not pending

bit 0 **Unimplemented:** Read as ‘0’

Note: Interrupt flag bits are set when an interrupt condition occurs, regardless of the state of its corresponding enable bit or the Global Interrupt Enable bit, GIE, of the INTCON register. User software should ensure the appropriate interrupt flag bits are clear prior to enabling an interrupt.

 © 2012 Microchip Technology Inc.

TABLE 8-1: SUMMARY OF REGISTERS ASSOCIATED WITH INTERRUPTS

Name	Bit 7	Bit 6	Bit 5	Bit 4	Bit 3	Bit 2	Bit 1	Bit 0	Register on Page
INTCON	GIE	PEIE	TMR0IE	INTE	IOCIE	TMR0IF	INTF	IOCIF	96
OPTION_REG	$\overline{\text{WPUEN}}$	INTEDG	TMR0CS	TMR0SE	PSA	PS<2:0>			185
PIE1	TMR1GIE	ADIE(1)	RCIE	TXIE	SSP1IE	—	TMR2IE	TMR1IE	97
PIE2	OSFIE	C2IE	C1IE	—	BCL1IE	USBIE	ACTIE	—	98
PIR1	TMR1GIF	ADIF(1)	RCIF	TXIF	SSP1IF	—	TMR2IF	TMR1IF	99
PIR2	OSFIF	C2IF	C1IF	—	BCL1IF	USBIF	ACTIF	—	100

Legend: — = unimplemented location, read as '0'. Shaded cells are not used by interrupts.

Note 1: PIC16(L)F1455/9 only.

NOTES:

 © 2012 Microchip Technology Inc.

9.0 POWER-DOWN MODE (SLEEP)

The Power-Down mode is entered by executing a SLEEP instruction.

Upon entering Sleep mode, the following conditions exist:

1. WDT will be cleared but keeps running, if enabled for operation during Sleep.
2. $\overline{PD}$ bit of the STATUS register is cleared.
3. $\overline{TO}$ bit of the STATUS register is set.
4. CPU clock is disabled.
5. 31 kHz LFINTOSC is unaffected and peripherals that operate from it may continue operation in Sleep.
6. ADC is unaffected, if the dedicated FRC clock is selected.
7. I/O ports maintain the status they had before SLEEP was executed (driving high, low or high-impedance).
8. Resets other than WDT are not affected by Sleep mode.

Refer to individual chapters for more details on peripheral operation during Sleep.

To minimize current consumption, the following conditions should be considered:

- I/O pins should not be floating
- External circuitry sinking current from I/O pins
- Internal circuitry sourcing current from I/O pins
- Current draw from pins with internal weak pull-ups
- Modules using 31 kHz LFINTOSC
- CWG module using HFINTOSC

I/O pins that are high-impedance inputs should be pulled to VDD or VSS externally to avoid switching currents caused by floating inputs.

Examples of internal circuitry that might be sourcing current include the FVR module. See **Section 14.0 “Fixed Voltage Reference (FVR) (PIC16(L)F1455/9 only)”** for more information on this module.

9.1 Wake-up from Sleep

The device can wake-up from Sleep through one of the following events:

1. External Reset input on $\overline{MCLR}$ pin, if enabled
2. BOR Reset, if enabled
3. POR Reset
4. Watchdog Timer, if enabled
5. Any external interrupt
6. Interrupts by peripherals capable of running during Sleep (see individual peripheral for more information)

The first three events will cause a device Reset. The last three events are considered a continuation of program execution. To determine whether a device Reset or wake-up event occurred, refer to **Section 6.12 “Determining the Cause of a Reset”**.

When the SLEEP instruction is being executed, the next instruction (PC + 1) is prefetched. For the device to wake-up through an interrupt event, the corresponding interrupt enable bit must be enabled. Wake-up will occur regardless of the state of the GIE bit. If the GIE bit is disabled, the device continues execution at the instruction after the SLEEP instruction. If the GIE bit is enabled, the device executes the instruction after the SLEEP instruction, the device will then call the Interrupt Service Routine. In cases where the execution of the instruction following SLEEP is not desirable, the user should have a NOP after the SLEEP instruction.

The WDT is cleared when the device wakes up from Sleep, regardless of the source of wake-up.

9.1.1 WAKE-UP USING INTERRUPTS

When global interrupts are disabled (GIE cleared) and any interrupt source has both its interrupt enable bit and interrupt flag bit set, one of the following will occur:

- If the interrupt occurs **before** the execution of a SLEEP instruction
  - SLEEP instruction will execute as a NOP.
  - WDT and WDT prescaler will not be cleared
  - $\overline{TO}$ bit of the STATUS register will not be set
  - $\overline{PD}$ bit of the STATUS register will not be cleared.
- If the interrupt occurs **during or after** the execution of a SLEEP instruction
  - SLEEP instruction will be completely executed
  - Device will immediately wake-up from Sleep
  - WDT and WDT prescaler will be cleared
  - $\overline{TO}$ bit of the STATUS register will be set
  - $\overline{PD}$ bit of the STATUS register will be cleared

Even if the flag bits were checked before executing a SLEEP instruction, it may be possible for flag bits to become set before the SLEEP instruction completes. To determine whether a SLEEP instruction executed, test the $\overline{PD}$ bit. If the $\overline{PD}$ bit is set, the SLEEP instruction was executed as a NOP.

FIGURE 9-1: WAKE-UP FROM SLEEP THROUGH INTERRUPT

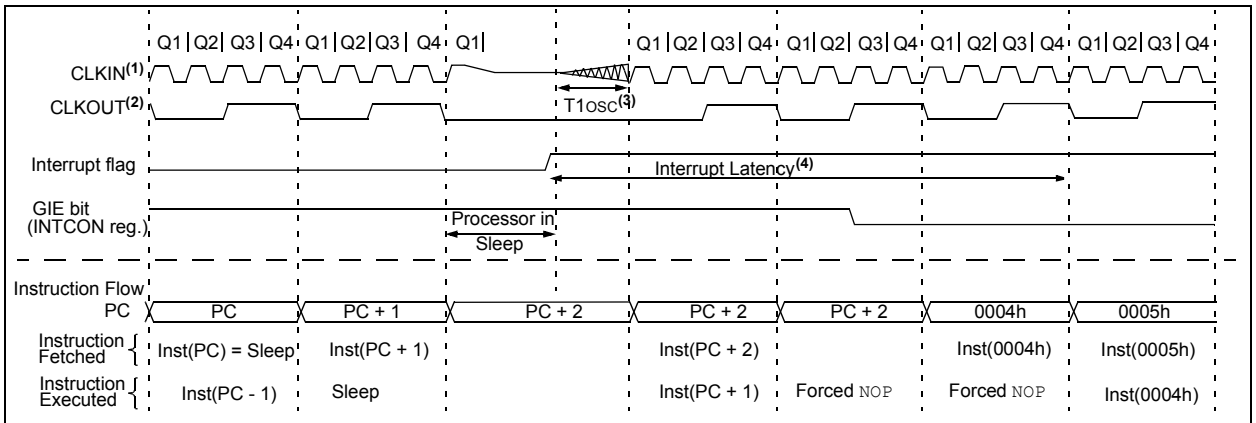

Note 1: External clock. High, Medium, Low mode assumed.
2: CLKOUT is shown here for timing reference.
3: T1osc; See **Section 29.0 "Electrical Specifications"**.
4: GIE = 1 assumed. In this case after wake-up, the processor calls the ISR at 0004h. If GIE = 0, execution will continue in-line.

 © 2012 Microchip Technology Inc.

9.2 Low-Power Sleep Mode

The PIC16F1454/5/9 device contains an internal Low Dropout (LDO) voltage regulator, which allows the device I/O pins to operate at voltages up to 5.5V while the internal device logic operates at a lower voltage. The LDO and its associated reference circuitry must remain active when the device is in Sleep mode. The PIC16F1454/5/9 allows the user to optimize the operating current in Sleep, depending on the application requirements.

A Low-Power Sleep mode can be selected by setting the VREGPM bit of the VREGCON register. With this bit set, the LDO and reference circuitry are placed in a low-power state when the device is in Sleep.

9.2.1 SLEEP CURRENT VS. WAKE-UP TIME

In the default operating mode, the LDO and reference circuitry remain in the normal configuration while in Sleep. The device is able to exit Sleep mode quickly since all circuits remain active. In Low-Power Sleep mode, when waking up from Sleep, an extra delay time is required for these circuits to return to the normal configuration and stabilize.

The Low-Power Sleep mode is beneficial for applications that stay in Sleep mode for long periods of time. The Normal mode is beneficial for applications that need to wake from Sleep quickly and frequently.

9.2.2 PERIPHERAL USAGE IN SLEEP

Some peripherals that can operate in Sleep mode will not operate properly with the Low-Power Sleep mode selected. The LDO will remain in the Normal-Power mode when those peripherals are enabled. The Low-Power Sleep mode is intended for use with these peripherals:

- Brown-Out Reset (BOR)
- Watchdog Timer (WDT)
- External interrupt pin/Interrupt-on-change pins
- Timer1 (with external clock source)

The Complementary Waveform Generator (CWG) module can utilize the HFINTOSC oscillator as either a clock source or as an input source. Under certain conditions, when the HFINTOSC is selected for use with the CWG module, the HFINTOSC will remain active during Sleep. This will have a direct effect on the Sleep mode current.

Please refer to section **25.10 “Operation During Sleep”** for more information.

Note:	The PIC16LF1454/5/9 does not have a configurable Low-Power Sleep mode. PIC16LF1454/5/9 is an unregulated device and is always in the lowest power state when in Sleep, with no wake-up time penalty. This device has a lower maximum V_{DD} and I/O voltage than the PIC16LF1454/5/9. See **Section 29.0 “Electrical Specifications”** for more information.

9.3 Register Definitions: Voltage Regulator Control

REGISTER 9-1: VREGCON: VOLTAGE REGULATOR CONTROL REGISTER(1)

U-0	U-0	U-0	U-0	U-0	U-0	R/W-0/0	R/W-1/1
—	—	—	—	—	—	VREGPM	Reserved
bit 7							bit 0

Legend:		
R = Readable bit	W = Writable bit	U = Unimplemented bit, read as ‘0’
u = Bit is unchanged	x = Bit is unknown	-n/n = Value at POR and BOR/Value at all other Resets
‘1’ = Bit is set	‘0’ = Bit is cleared	

bit 7-2 **Unimplemented:** Read as ‘0’

bit 1 **VREGPM:** Voltage Regulator Power Mode Selection bit
- 1 = Low-Power Sleep mode enabled in Sleep(2)
  Draws lowest current in Sleep, slower wake-up
- 0 = Normal-Power mode enabled in Sleep(2)
  Draws higher current in Sleep, faster wake-up

bit 0 **Reserved:** Read as ‘1’. Maintain this bit set.

Note 1: PIC16LF1454/5/9 only.
2: See **Section 29.0 “Electrical Specifications”**.

TABLE 9-1: SUMMARY OF REGISTERS ASSOCIATED WITH POWER-DOWN MODE

Name	Bit 7	Bit 6	Bit 5	Bit 4	Bit 3	Bit 2	Bit 1	Bit 0	Register on Page
INTCON	GIE	PEIE	TMR0IE	INTE	IOCIE	TMR0IF	INTF	IOCIF	96
IOCAF	—	—	IOCAF5	IOCAF4	IOCAF3	—	IOCAF1	IOCAF0	146
IOCAN	—	—	IOCAN5	IOCAN4	IOCAN3	—	IOCAN1	IOCAN0	145
IOCAP	—	—	IOCAP5	IOCAP4	IOCAP3	—	IOCAP1	IOCAP0	145
IOCBF(2)	IOCBF7	IOCBF6	IOCBF5	IOCBF4	—	—	—	—	147
IOCBN(2)	IOCBN7	IOCBN6	IOCBN5	IOCBN4	—	—	—	—	147
IOCBP(2)	IOCBP7	IOCBP6	IOCBP5	IOCBP4	—	—	—	—	146
PIE1	TMR1GIE	ADIE(1)	RCIE	TXIE	SSP1IE	—	TMR2IE	TMR1IE	97
PIE2	OSFIE	C2IE	C1IE	—	BCL1IE	USBIE	ACTIE	—	98
PIR1	TMR1GIF	ADIF(1)	RCIF	TXIF	SSP1IF	—	TMR2IF	TMR1IF	99
PIR2	OSFIF	C2IF	C1IF	—	BCL1IF	USBIF	ACTIF	—	100
STATUS	—	—	—	$\overline{TO}$	$\overline{PD}$	Z	DC	C	27
WDTCON	—	—	WDTPS<4:0>					SWDTEN	110

Legend: — = unimplemented, read as ‘0’. Shaded cells are not used in Power-Down mode.
Note 1: PIC16(L)F1455/9 only.
2: PIC16(L)F1459 only.

 © 2012 Microchip Technology Inc.

10.0 WATCHDOG TIMER (WDT)

The Watchdog Timer is a system timer that generates a Reset if the firmware does not issue a `CLRWDT` instruction within the time-out period. The Watchdog Timer is typically used to recover the system from unexpected events.

The WDT has the following features:

- Independent clock source
- Multiple operating modes
  - WDT is always on
  - WDT is off when in Sleep
  - WDT is controlled by software
  - WDT is always off
- Configurable time-out period is from 1 ms to 256 seconds (nominal)
- Multiple Reset conditions
- Operation during Sleep

FIGURE 10-1: WATCHDOG TIMER BLOCK DIAGRAM

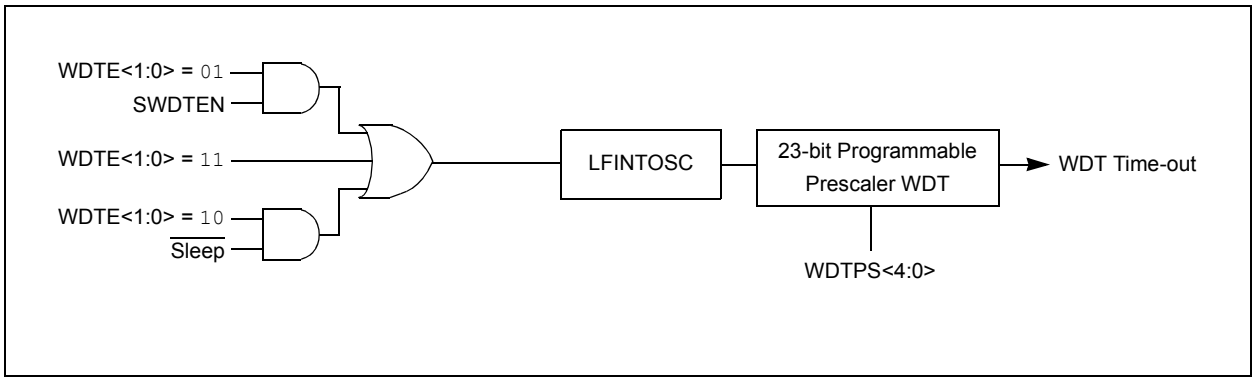

10.1 Independent Clock Source

The WDT derives its time base from the 31 kHz LFINTOSC internal oscillator. Time intervals in this chapter are based on a nominal interval of 1 ms. See **Section 29.0 "Electrical Specifications"** for the LFINTOSC tolerances.

10.2 WDT Operating Modes

The Watchdog Timer module has four operating modes controlled by the WDTE<1:0> bits in Configuration Words. See Table 10-1.

10.2.1 WDT IS ALWAYS ON

When the WDTE bits of Configuration Words are set to '11', the WDT is always on.

WDT protection is active during Sleep.

10.2.2 WDT IS OFF IN SLEEP

When the WDTE bits of Configuration Words are set to '10', the WDT is on, except in Sleep.

WDT protection is not active during Sleep.

10.2.3 WDT CONTROLLED BY SOFTWARE

When the WDTE bits of Configuration Words are set to '01', the WDT is controlled by the SWDTEN bit of the WDTCON register.

WDT protection is unchanged by Sleep. See Table 10-1 for more details.

TABLE 10-1: WDT OPERATING MODES

WDTE<1:0>	SWDTEN	Device Mode	WDT Mode
11	X	X	Active
10	X	Awake	Active
		Sleep	Disabled
01	1	X	Active
	0		Disabled
00	X	X	Disabled

10.3 Time-Out Period

The WDTPS bits of the WDTCON register set the time-out period from 1 ms to 256 seconds (nominal). After a Reset, the default time-out period is two seconds.

10.4 Clearing the WDT

The WDT is cleared when any of the following conditions occur:

- Any Reset
- CLRWDT instruction is executed
- Device enters Sleep
- Device wakes up from Sleep
- Oscillator fail
- WDT is disabled
- Oscillator Start-up Timer (OST) is running

See Table 10-2 for more information.

10.5 Operation During Sleep

When the device enters Sleep, the WDT is cleared. If the WDT is enabled during Sleep, the WDT resumes counting.

When the device exits Sleep, the WDT is cleared again. The WDT remains clear until the OST, if enabled, completes. See **Section 5.0 "Oscillator Module (With Fail-Safe Clock Monitor)"** for more information on the OST.

The WDT remains clear until the OST, if enabled, completes. See **Section 5.0 "Oscillator Module (With Fail-Safe Clock Monitor)"** for more information on the OST. (add with start-up timer oscillators)

When a WDT time-out occurs while the device is in Sleep, no Reset is generated. Instead, the device wakes up and resumes operation. The $\overline{TO}$ and $\overline{PD}$ bits in the STATUS register are changed to indicate the event. The $\overline{RWDT}$ bit in the PCON register can also be used. See **Section 3.0 "Memory Organization"** for more information.

 © 2012 Microchip Technology Inc.

TABLE 10-2: WDT CLEARING CONDITIONS

Conditions	WDT
WDTE<1:0> = 00	Cleared
WDTE<1:0> = 01 and SWDTEN = 0	
WDTE<1:0> = 10 and enter Sleep	
CLRWDT Command	
Oscillator Fail Detected	
Exit Sleep + System Clock = EXTRC, INTOSC, EXTCLK	
Exit Sleep + System Clock = XT, HS, LP	Cleared until the end of OST
Change INTOSC divider (IRCF bits)	Unaffected

10.6 Register Definitions: Watchdog Control

REGISTER 10-1: WDTCON: WATCHDOG TIMER CONTROL REGISTER

U-0	U-0	R/W-0/0	R/W-1/1	R/W-0/0	R/W-1/1	R/W-1/1	R/W-0/0
—	—	WDTPS<4:0>					SWDTEN
bit 7							bit 0

Legend:		
R = Readable bit	W = Writable bit	U = Unimplemented bit, read as ‘0’
u = Bit is unchanged	x = Bit is unknown	-n/n = Value at POR and BOR/Value at all other Resets
‘1’ = Bit is set	‘0’ = Bit is cleared	

bit 7-6 **Unimplemented:** Read as ‘0’

bit 5-1 **WDTPS<4:0>:** Watchdog Timer Period Select bits(1)

Bit Value = Prescale Rate

00000 = 1:32 (Interval 1 ms nominal)
00001 = 1:64 (Interval 2 ms nominal)
00010 = 1:128 (Interval 4 ms nominal)
00011 = 1:256 (Interval 8 ms nominal)
00100 = 1:512 (Interval 16 ms nominal)
00101 = 1:1024 (Interval 32 ms nominal)
00110 = 1:2048 (Interval 64 ms nominal)
00111 = 1:4096 (Interval 128 ms nominal)
01000 = 1:8192 (Interval 256 ms nominal)
01001 = 1:16384 (Interval 512 ms nominal)
01010 = 1:32768 (Interval 1s nominal)
01011 = 1:65536 (Interval 2s nominal) (Reset value)
01100 = 1:131072 (2^{17}) (Interval 4s nominal)
01101 = 1:262144 (2^{18}) (Interval 8s nominal)
01110 = 1:524288 (2^{19}) (Interval 16s nominal)
01111 = 1:1048576 (2^{20}) (Interval 32s nominal)
10000 = 1:2097152 (2^{21}) (Interval 64s nominal)
10001 = 1:4194304 (2^{22}) (Interval 128s nominal)
10010 = 1:8388608 (2^{23}) (Interval 256s nominal)

10011 = Reserved. Results in minimum interval (1:32)
•
•
•
11111 = Reserved. Results in minimum interval (1:32)

bit 0 **SWDTEN:** Software Enable/Disable for Watchdog Timer bit

If WDTE<1:0> = 00:
This bit is ignored.
If WDTE<1:0> = 01:
1 = WDT is turned on
0 = WDT is turned off
If WDTE<1:0> = 1x:
This bit is ignored.

Note 1: Times are approximate. WDT time is based on 31 kHz LFINTOSC.

 © 2012 Microchip Technology Inc.

TABLE 10-3: SUMMARY OF REGISTERS ASSOCIATED WITH WATCHDOG TIMER

Name	Bit 7	Bit 6	Bit 5	Bit 4	Bit 3	Bit 2	Bit 1	Bit 0	Register on Page
OSCCON	SPLLEN	SPLLMULT	IRCF<3:0>				SCS<1:0>		75
PCON	STKOVF	STKUNF	—	$\overline{\text{RWDT}}$	$\overline{\text{RMCLR}}$	$\overline{\text{RI}}$	$\overline{\text{POR}}$	$\overline{\text{BOR}}$	85
STATUS	—	—	—	$\overline{\text{TO}}$	$\overline{\text{PD}}$	Z	DC	C	27
WDTCON	—	—	WDTPS<4:0>					SWDTEN	110

Legend: x = unknown, u = unchanged, – = unimplemented locations read as '0'. Shaded cells are not used by Watchdog Timer.

TABLE 10-4: SUMMARY OF CONFIGURATION WORD WITH WATCHDOG TIMER

Name	Bits	Bit -/7	Bit -/6	Bit 13/5	Bit 12/4	Bit 11/3	Bit 10/2	Bit 9/1	Bit 8/0	Register on Page
CONFIG1	13:8	—	—	FCMEN	IESO	$\overline{\text{CLKOUTEN}}$	BOREN<1:0>		—	52
	7:0	$\overline{\text{CP}}$	MCLRE	$\overline{\text{PWRTE}}$	WDTE<1:0>		FOSC<2:0>			

Legend: — = unimplemented location, read as '0'. Shaded cells are not used by Watchdog Timer.

11.0 FLASH PROGRAM MEMORY CONTROL

The Flash program memory is readable and writable during normal operation over the full VDD range. Program memory is indirectly addressed using Special Function Registers (SFRs). The SFRs used to access program memory are:

- PMCON1
- PMCON2
- PMDATL
- PMDATH
- PMADRL
- PMADRH

When accessing the program memory, the PMDATH:PMDATL register pair forms a 2-byte word that holds the 14-bit data for read/write, and the PMADRH:PMADRL register pair forms a 2-byte word that holds the 15-bit address of the program memory location being read.

The write time is controlled by an on-chip timer. The write/erase voltages are generated by an on-chip charge pump rated to operate over the operating voltage range of the device.

The Flash program memory can be protected in two ways; by code protection ($\overline{CP}$ bit in Configuration Words) and write protection (WRT<1:0> bits in Configuration Words).

Code protection ($\overline{CP}$ = 0)(1), disables access, reading and writing, to the Flash program memory via external device programmers. Code protection does not affect the self-write and erase functionality. Code protection can only be reset by a device programmer performing a Bulk Erase to the device, clearing all Flash program memory, Configuration bits and User IDs.

Write protection prohibits self-write and erase to a portion or all of the Flash program memory as defined by the bits WRT<1:0>. Write protection does not affect a device programmers ability to read, write or erase the device.

Note 1:	Code protection of the entire Flash program memory array is enabled by clearing the $\overline{CP}$ bit of Configuration Words.

11.1 PMADRL and PMADRH Registers

The PMADRH:PMADRL register pair can address up to a maximum of 32K words of program memory. When selecting a program address value, the MSB of the address is written to the PMADRH register and the LSB is written to the PMADRL register.

11.1.1 PMCON1 AND PMCON2 REGISTERS

PMCON1 is the control register for Flash program memory accesses.

Control bits RD and WR initiate read and write, respectively. These bits cannot be cleared, only set, in software. They are cleared by hardware at completion of the read or write operation. The inability to clear the WR bit in software prevents the accidental, premature termination of a write operation.

The WREN bit, when set, will allow a write operation to occur. On power-up, the WREN bit is clear. The WRERR bit is set when a write operation is interrupted by a Reset during normal operation. In these situations, following Reset, the user can check the WRERR bit and execute the appropriate error handling routine.

The PMCON2 register is a write-only register. Attempting to read the PMCON2 register will return all '0's.

To enable writes to the program memory, a specific pattern (the unlock sequence), must be written to the PMCON2 register. The required unlock sequence prevents inadvertent writes to the program memory write latches and Flash program memory.

11.2 Flash Program Memory Overview

It is important to understand the Flash program memory structure for erase and programming operations. Flash program memory is arranged in rows. A row consists of a fixed number of 14-bit program memory words. A row is the minimum size that can be erased by user software.

After a row has been erased, the user can reprogram all or a portion of this row. Data to be written into the program memory row is written to 14-bit wide data write latches. These write latches are not directly accessible to the user, but may be loaded via sequential writes to the PMDATH:PMDATL register pair.

Note:	If the user wants to modify only a portion of a previously programmed row, then the contents of the entire row must be read and saved in RAM prior to the erase. Then, new data and retained data can be written into the write latches to reprogram the row of Flash program memory. However, any unprogrammed locations can be written without first erasing the row. In this case, it is not necessary to save and rewrite the other previously programmed locations.

See Table 11-1 for Erase Row size and the number of write latches for Flash program memory.

 © 2012 Microchip Technology Inc.

TABLE 11-1: FLASH MEMORY ORGANIZATION BY DEVICE

Device	Row Erase (words)	Write Latches (words)
PIC16(L)F1454/5/9	32	32

11.2.1 READING THE FLASH PROGRAM MEMORY

To read a program memory location, the user must:

1. Write the desired address to the PMADRH:PMADRL register pair.
2. Clear the CFGS bit of the PMCON1 register.
3. Then, set control bit RD of the PMCON1 register.

Once the read control bit is set, the program memory Flash controller will use the second instruction cycle to read the data. This causes the second instruction immediately following the "`BSF PMCON1,RD`" instruction to be ignored. The data is available in the very next cycle, in the PMDATH:PMDATL register pair; therefore, it can be read as two bytes in the following instructions.

PMDATH:PMDATL register pair will hold this value until another read or until it is written to by the user.

Note:	The two instructions following a program memory read are required to be `NOP`s. This prevents the user from executing a two-cycle instruction on the next instruction after the RD bit is set.

FIGURE 11-1: FLASH PROGRAM MEMORY READ FLOWCHART

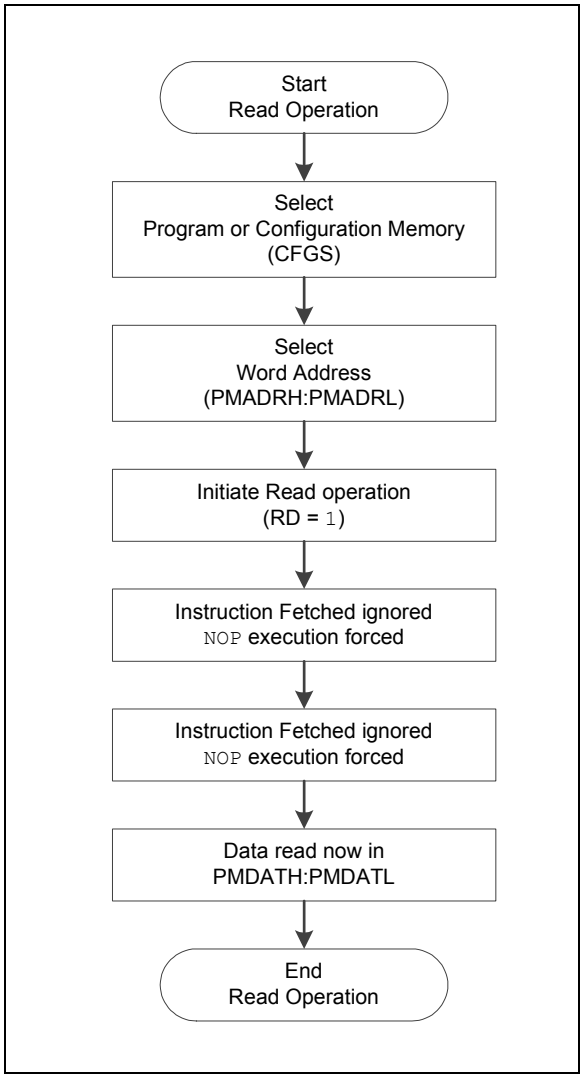

FIGURE 11-2: FLASH PROGRAM MEMORY READ CYCLE EXECUTION

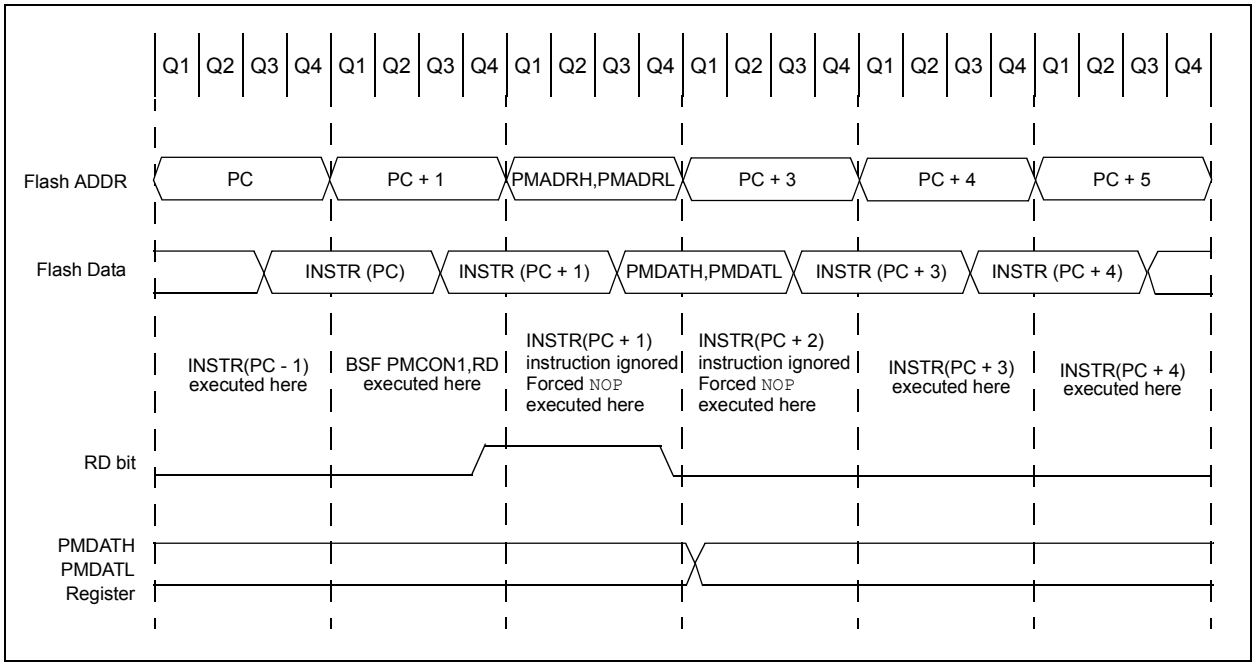

EXAMPLE 11-1: FLASH PROGRAM MEMORY READ

```
* This code block will read 1 word of program
* memory at the memory address:
    PROG_ADDR_HI: PROG_ADDR_LO
*   data will be returned in the variables;
*   PROG_DATA_HI, PROG_DATA_LO

    BANKSEL  PMADRL          ; Select Bank for PMCON registers
    MOVLW    PROG_ADDR_LO    ;
    MOVWF    PMADRL          ; Store LSB of address
    MOVLW    PROG_ADDR_HI    ;
    MOVWF    PMADRH          ; Store MSB of address

    BCF      PMCON1,CFGS     ; Do not select Configuration Space
    BSF      PMCON1,RD       ; Initiate read
    NOP                      ; Ignored (Figure 11-2)
    NOP                      ; Ignored (Figure 11-2)

    MOVF     PMDATL,W        ; Get LSB of word
    MOVWF    PROG_DATA_LO    ; Store in user location
    MOVF     PMDATH,W        ; Get MSB of word
    MOVWF    PROG_DATA_HI    ; Store in user location
```

 © 2012 Microchip Technology Inc.

11.2.2 FLASH MEMORY UNLOCK SEQUENCE

The unlock sequence is a mechanism that protects the Flash program memory from unintended self-write programming or erasing. The sequence must be executed and completed without interruption to successfully complete any of the following operations:

- Row Erase
- Load program memory write latches
- Write of program memory write latches to program memory
- Write of program memory write latches to User IDs

The unlock sequence consists of the following steps:

1. Write 55h to PMCON2
2. Write AAh to PMCON2
3. Set the WR bit in PMCON1
4. `NOP` instruction
5. `NOP` instruction

Once the WR bit is set, the processor will always force two `NOP` instructions. When an Erase Row or Program Row operation is being performed, the processor will stall internal operations (typical 2 ms), until the operation is complete and then resume with the next instruction. When the operation is loading the program memory write latches, the processor will always force the two `NOP` instructions and continue uninterrupted with the next instruction.

Since the unlock sequence must not be interrupted, global interrupts should be disabled prior to the unlock sequence and re-enabled after the unlock sequence is completed.

FIGURE 11-3: FLASH PROGRAM MEMORY UNLOCK SEQUENCE FLOWCHART

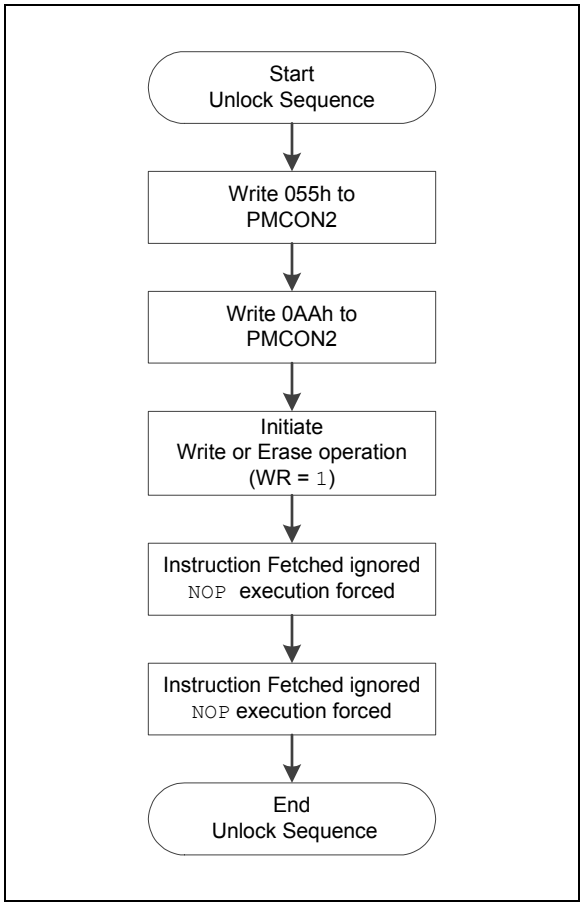

11.2.3 ERASING FLASH PROGRAM MEMORY

While executing code, program memory can only be erased by rows. To erase a row:

1. Load the PMADRH:PMADRL register pair with any address within the row to be erased.
2. Clear the CFGS bit of the PMCON1 register.
3. Set the FREE and WREN bits of the PMCON1 register.
4. Write 55h, then AAh, to PMCON2 (Flash programming unlock sequence).
5. Set control bit WR of the PMCON1 register to begin the erase operation.

See Example 11-2.

After the "`BSF PMCON1,WR`" instruction, the processor requires two cycles to set up the erase operation. The user must place two `NOP` instructions immediately following the WR bit set instruction. The processor will halt internal operations for the typical 2 ms erase time. This is not Sleep mode as the clocks and peripherals will continue to run. After the erase cycle, the processor will resume operation with the third instruction after the PMCON1 write instruction.

FIGURE 11-4: FLASH PROGRAM MEMORY ERASE FLOWCHART

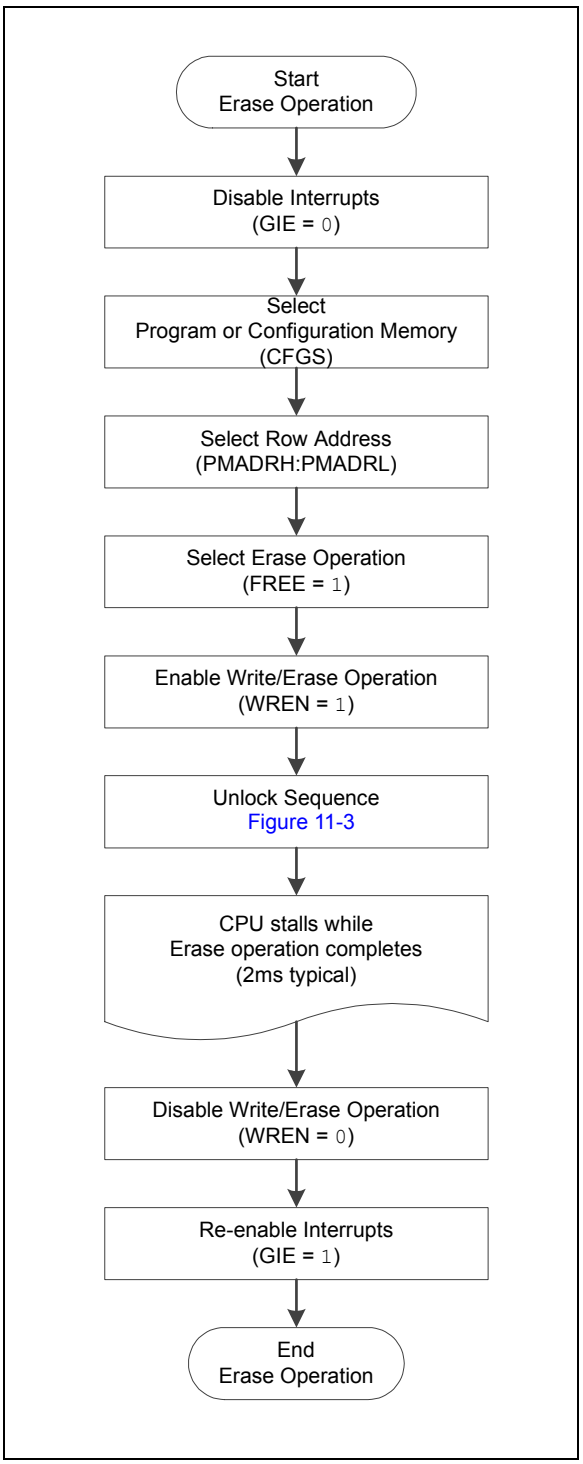

 © 2012 Microchip Technology Inc.

EXAMPLE 11-2: ERASING ONE ROW OF PROGRAM MEMORY

```
; This row erase routine assumes the following:
; 1. A valid address within the erase row is loaded in ADDRH:ADDRL
; 2. ADDRH and ADDRL are located in shared data memory 0x70 - 0x7F (common RAM)


        BCF         INTCON,GIE     ; Disable ints so required sequences will execute properly
        BANKSEL     PMADRL
        MOVF        ADDRL,W        ; Load lower 8 bits of erase address boundary
        MOVWF       PMADRL
        MOVF        ADDRH,W        ; Load upper 6 bits of erase address boundary
        MOVWF       PMADRH
        BCF         PMCON1,CFGS    ; Not configuration space
        BSF         PMCON1,FREE    ; Specify an erase operation
        BSF         PMCON1,WREN    ; Enable writes

Required
Sequence
        MOVLW       55h            ; Start of required sequence to initiate erase
        MOVWF       PMCON2         ; Write 55h
        MOVLW       0AAh           ;
        MOVWF       PMCON2         ; Write AAh
        BSF         PMCON1,WR      ; Set WR bit to begin erase
        NOP                        ; NOP instructions are forced as processor starts
        NOP                        ; row erase of program memory.
                                   ;
                                   ; The processor stalls until the erase process is complete
                                   ; after erase processor continues with 3rd instruction

        BCF         PMCON1,WREN    ; Disable writes
        BSF         INTCON,GIE     ; Enable interrupts
```

11.2.4 WRITING TO FLASH PROGRAM MEMORY

Program memory is programmed using the following steps:

1. Load the address in PMADRH:PMADRL of the row to be programmed.
2. Load each write latch with data.
3. Initiate a programming operation.
4. Repeat steps 1 through 3 until all data is written.

Before writing to program memory, the word(s) to be written must be erased or previously unwritten. Program memory can only be erased one row at a time. No automatic erase occurs upon the initiation of the write.

Program memory can be written one or more words at a time. The maximum number of words written at one time is equal to the number of write latches. See Figure 11-5 (row writes to program memory with 32 write latches) for more details.

The write latches are aligned to the Flash row address boundary defined by the upper 10-bits of PMADRH:PMADRL, (PMADRH<6:0>:PMADRL<7:5>) with the lower 5-bits of PMADRL, (PMADRL<4:0>) determining the write latch being loaded. Write operations do not cross these boundaries. At the completion of a program memory write operation, the data in the write latches is reset to contain 0x3FFF.

The following steps should be completed to load the write latches and program a row of program memory. These steps are divided into two parts. First, each write latch is loaded with data from the PMDATH:PMDATL using the unlock sequence with LWLO = `1`. When the last word to be loaded into the write latch is ready, the LWLO bit is cleared and the unlock sequence executed. This initiates the programming operation, writing all the latches into Flash program memory.

Note:	The special unlock sequence is required to load a write latch with data or initiate a Flash programming operation. If the unlock sequence is interrupted, writing to the latches or program memory will not be initiated.

1. Set the WREN bit of the PMCON1 register.
2. Clear the CFGS bit of the PMCON1 register.
3. Set the LWLO bit of the PMCON1 register. When the LWLO bit of the PMCON1 register is ‘`1`’, the write sequence will only load the write latches and will not initiate the write to Flash program memory.
4. Load the PMADRH:PMADRL register pair with the address of the location to be written.
5. Load the PMDATH:PMDATL register pair with the program memory data to be written.
6. Execute the unlock sequence (**Section 11.2.2 “Flash Memory Unlock Sequence”**). The write latch is now loaded.
7. Increment the PMADRH:PMADRL register pair to point to the next location.
8. Repeat steps 5 through 7 until all but the last write latch has been loaded.
9. Clear the LWLO bit of the PMCON1 register. When the LWLO bit of the PMCON1 register is ‘`0`’, the write sequence will initiate the write to Flash program memory.
10. Load the PMDATH:PMDATL register pair with the program memory data to be written.
11. Execute the unlock sequence (**Section 11.2.2 “Flash Memory Unlock Sequence”**). The entire program memory latch content is now written to Flash program memory.

Note:	The program memory write latches are reset to the blank state (0x3FFF) at the completion of every write or erase operation. As a result, it is not necessary to load all the program memory write latches. Unloaded latches will remain in the blank state.

An example of the complete write sequence is shown in Example 11-3. The initial address is loaded into the PMADRH:PMADRL register pair; the data is loaded using indirect addressing.

 © 2012 Microchip Technology Inc.

FIGURE 11-5: BLOCK WRITES TO FLASH PROGRAM MEMORY WITH 32 WRITE LATCHES

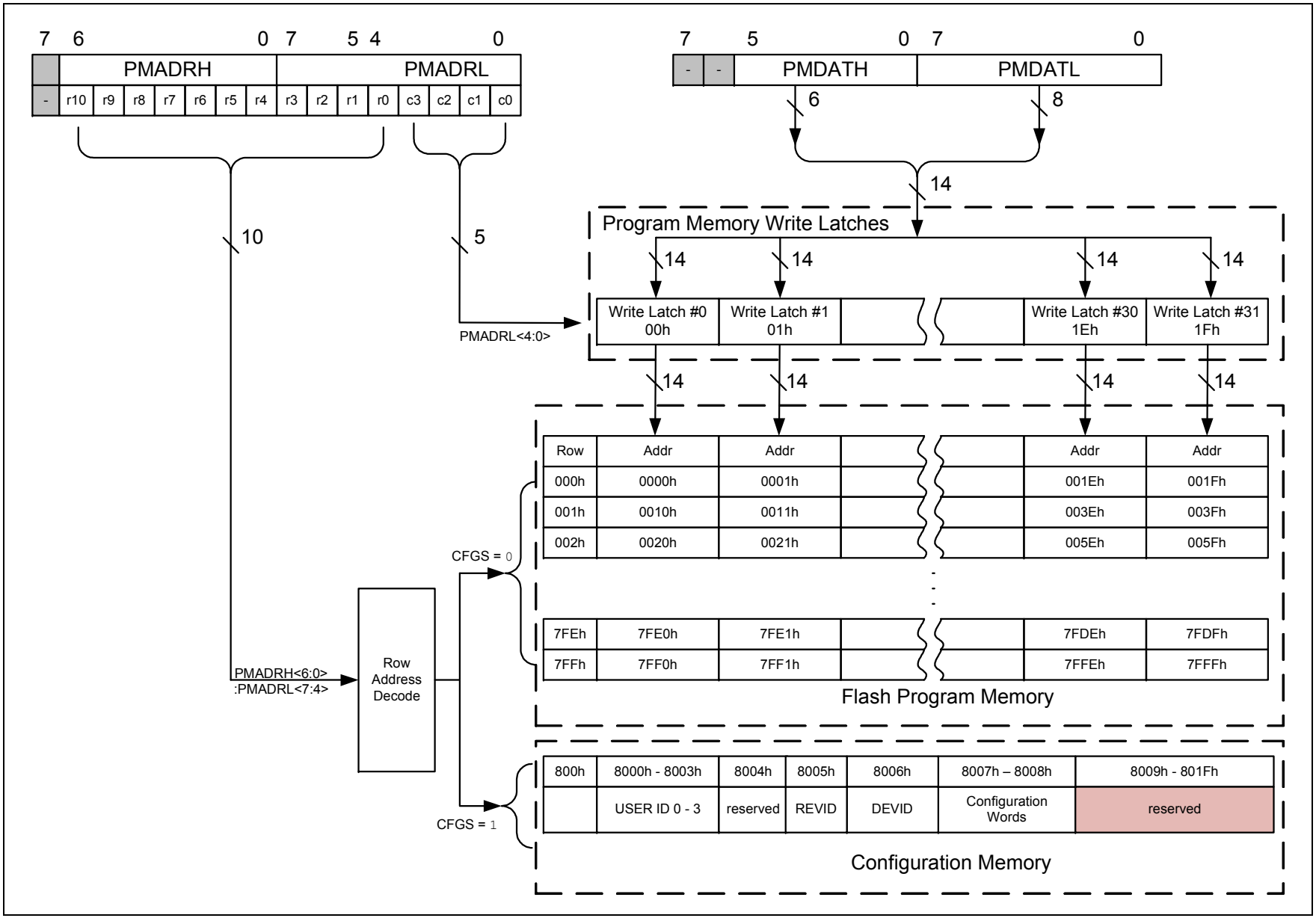

Preliminary

© 2012 Microchip Technology Inc.

FIGURE 11-6: FLASH PROGRAM MEMORY WRITE FLOWCHART

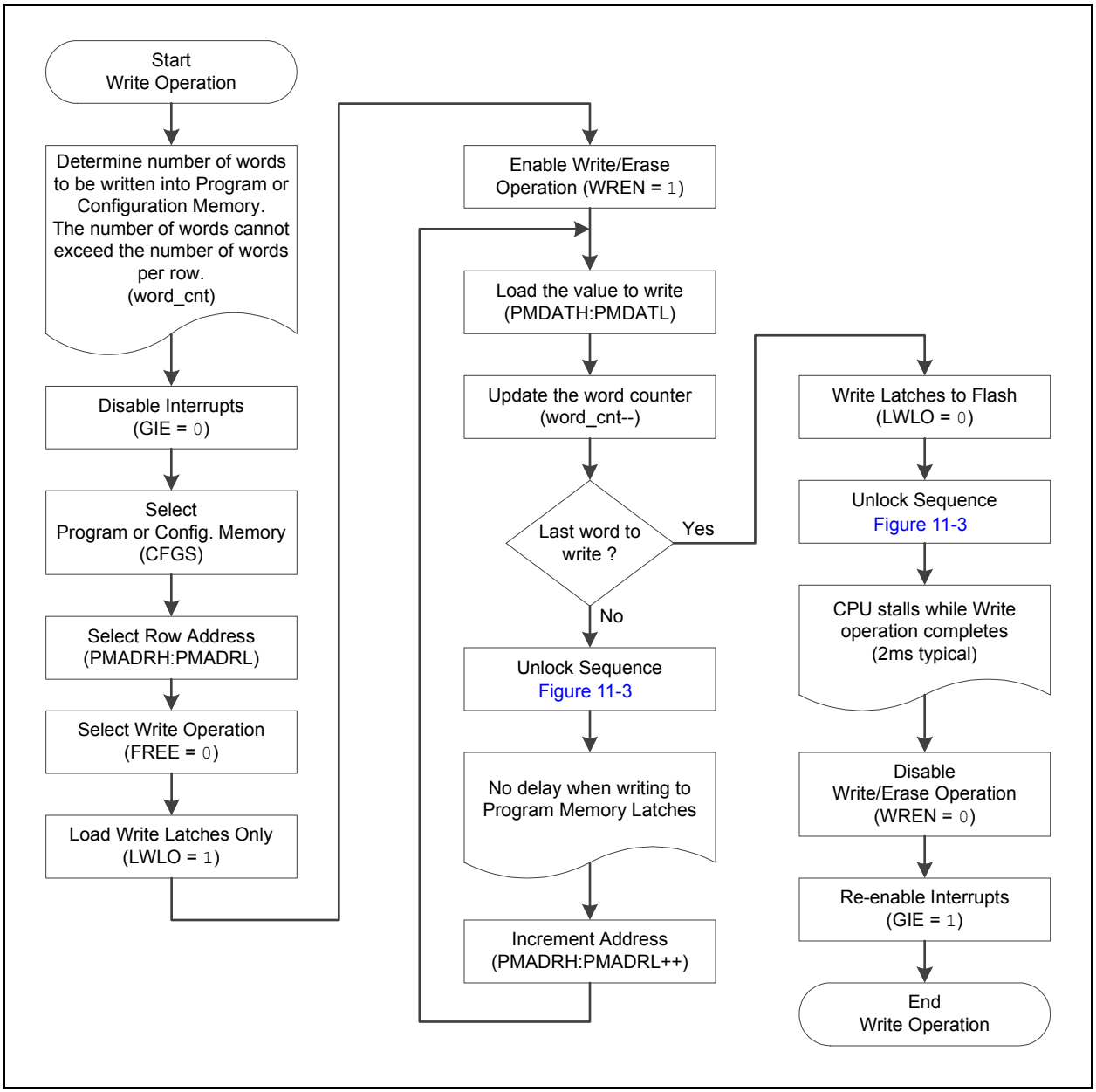

 © 2012 Microchip Technology Inc.

EXAMPLE 11-3: WRITING TO FLASH PROGRAM MEMORY

```
; This write routine assumes the following:
; 1. 64 bytes of data are loaded, starting at the address in DATA_ADDR
; 2. Each word of data to be written is made up of two adjacent bytes in DATA_ADDR,
; stored in little endian format
; 3. A valid starting address (the least significant bits = 00000) is loaded in ADDRH:ADDRL
; 4. ADDRH and ADDRL are located in shared data memory 0x70 - 0x7F (common RAM)
;
        BCF         INTCON,GIE     ; Disable ints so required sequences will execute properly
        BANKSEL     PMADRH         ; Bank 3
        MOVF        ADDRH,W        ; Load initial address
        MOVWF       PMADRH         ;
        MOVF        ADDRL,W        ;
        MOVWF       PMADRL         ;
        MOVLW       LOW DATA_ADDR  ; Load initial data address
        MOVWF       FSR0L          ;
        MOVLW       HIGH DATA_ADDR ; Load initial data address
        MOVWF       FSR0H          ;
        BCF         PMCON1,CFGS    ; Not configuration space
        BSF         PMCON1,WREN    ; Enable writes
        BSF         PMCON1,LWLO    ; Only Load Write Latches
LOOP
        MOVIW       FSR0++         ; Load first data byte into lower
        MOVWF       PMDATL         ;
        MOVIW       FSR0++         ; Load second data byte into upper
        MOVWF       PMDATH         ;

        MOVF        PMADRL,W       ; Check if lower bits of address are '00000'
        XORLW       0x1F           ; Check if we're on the last of 32 addresses
        ANDLW       0x1F           ;
        BTFSC       STATUS,Z       ; Exit if last of 32 words,
        GOTO        START_WRITE    ;

Required Sequence
        MOVLW       55h            ; Start of required write sequence:
        MOVWF       PMCON2         ; Write 55h
        MOVLW       0AAh           ;
        MOVWF       PMCON2         ; Write AAh
        BSF         PMCON1,WR      ; Set WR bit to begin write
        NOP                        ; NOP instructions are forced as processor
                                   ; loads program memory write latches
        NOP                        ;

        INCF        PMADRL,F       ; Still loading latches Increment address
        GOTO        LOOP           ; Write next latches

START_WRITE
        BCF         PMCON1,LWLO    ; No more loading latches - Actually start Flash program
                                   ; memory write

Required Sequence
        MOVLW       55h            ; Start of required write sequence:
        MOVWF       PMCON2         ; Write 55h
        MOVLW       0AAh           ;
        MOVWF       PMCON2         ; Write AAh
        BSF         PMCON1,WR      ; Set WR bit to begin write
        NOP                        ; NOP instructions are forced as processor writes
                                   ; all the program memory write latches simultaneously
        NOP                        ; to program memory.
                                   ; After NOPs, the processor
                                   ; stalls until the self-write process in complete
                                   ; after write processor continues with 3rd instruction
        BCF         PMCON1,WREN    ; Disable writes
        BSF         INTCON,GIE     ; Enable interrupts
```

11.3 Modifying Flash Program Memory

When modifying existing data in a program memory row, and data within that row must be preserved, it must first be read and saved in a RAM image. Program memory is modified using the following steps:

1. Load the starting address of the row to be modified.
2. Read the existing data from the row into a RAM image.
3. Modify the RAM image to contain the new data to be written into program memory.
4. Load the starting address of the row to be rewritten.
5. Erase the program memory row.
6. Load the write latches with data from the RAM image.
7. Initiate a programming operation.

FIGURE 11-7: FLASH PROGRAM MEMORY MODIFY FLOWCHART

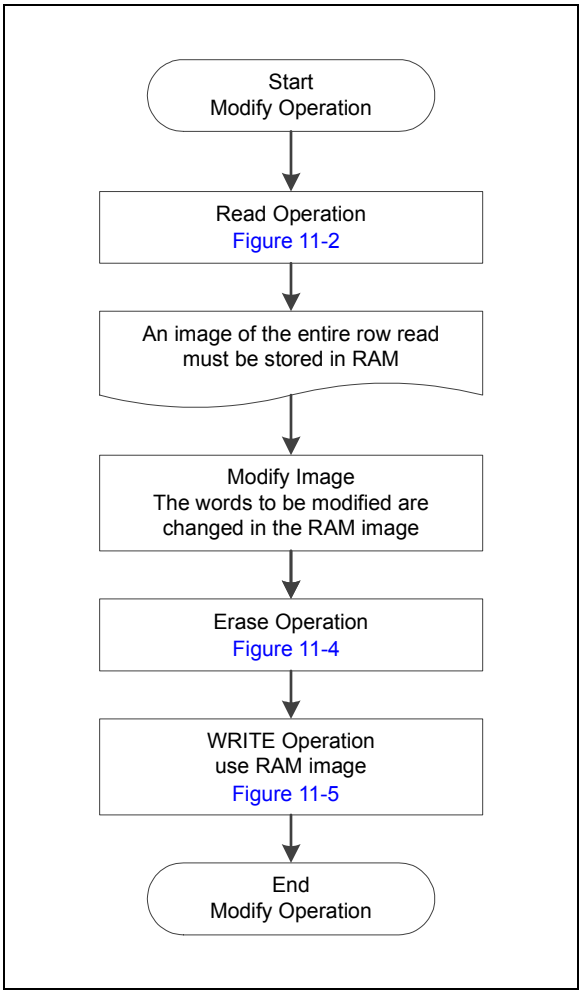

 © 2012 Microchip Technology Inc.

11.4 User ID, Device ID and Configuration Word Access

Instead of accessing program memory, the User ID's, Device ID/Revision ID and Configuration Words can be accessed when CFGS = 1 in the PMCON1 register. This is the region that would be pointed to by PC<15> = 1, but not all addresses are accessible. Different access may exist for reads and writes. Refer to Table 11-2.

When read access is initiated on an address outside the parameters listed in Table 11-2, the PMDATH:PMDATL register pair is cleared, reading back '0's.

TABLE 11-2: USER ID, DEVICE ID AND CONFIGURATION WORD ACCESS (CFGS = 1)

Address	Function	Read Access	Write Access
8000h-8003h	User IDs	Yes	Yes
8005h-8006h	Revision ID-Device ID	Yes	No
8007h-8008h	Configuration Words 1 and 2	Yes	No

EXAMPLE 11-4: CONFIGURATION WORD AND DEVICE ID ACCESS

```
* This code block will read 1 word of program memory at the memory address:
*   PROG_ADDR_LO (must be 00h-08h) data will be returned in the variables;
*   PROG_DATA_HI, PROG_DATA_LO

    BANKSEL  PMADRL          ; Select correct Bank
    MOVLW    PROG_ADDR_LO    ;
    MOVWF    PMADRL          ; Store LSB of address
    CLRF     PMADRH          ; Clear MSB of address

    BSF      PMCON1,CFGS     ; Select Configuration Space
    BCF      INTCON,GIE      ; Disable interrupts
    BSF      PMCON1,RD       ; Initiate read
    NOP                      ; Executed (See Figure 11-2)
    NOP                      ; Ignored (See Figure 11-2)
    BSF      INTCON,GIE      ; Restore interrupts

    MOVF     PMDATL,W        ; Get LSB of word
    MOVWF    PROG_DATA_LO    ; Store in user location
    MOVF     PMDATH,W        ; Get MSB of word
    MOVWF    PROG_DATA_HI    ; Store in user location
```

11.5 Write Verify

It is considered good programming practice to verify that program memory writes agree with the intended value. Since program memory is stored as a full page then the stored program memory contents are compared with the intended data stored in RAM after the last write is complete.

FIGURE 11-8: FLASH PROGRAM MEMORY VERIFY FLOWCHART

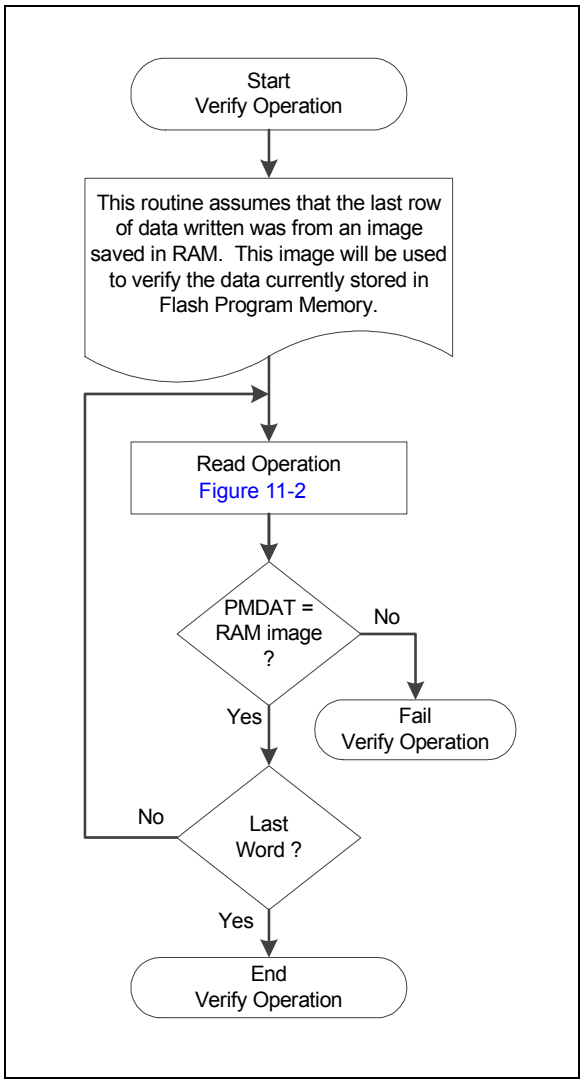

 © 2012 Microchip Technology Inc.

11.6 Register Definitions: Flash Program Memory Control

REGISTER 11-1: PMDATL: PROGRAM MEMORY DATA LOW BYTE REGISTER

R/W-x/u	R/W-x/u	R/W-x/u	R/W-x/u	R/W-x/u	R/W-x/u	R/W-x/u	R/W-x/u
PMDAT<7:0>							
bit 7							bit 0

Legend:		
R = Readable bit	W = Writable bit	U = Unimplemented bit, read as ‘0’
u = Bit is unchanged	x = Bit is unknown	-n/n = Value at POR and BOR/Value at all other Resets
‘1’ = Bit is set	‘0’ = Bit is cleared	

bit 7-0 **PMDAT<7:0>**: Read/write value for Least Significant bits of program memory

REGISTER 11-2: PMDATH: PROGRAM MEMORY DATA HIGH BYTE REGISTER

U-0	U-0	R/W-x/u	R/W-x/u	R/W-x/u	R/W-x/u	R/W-x/u	R/W-x/u
—	—	PMDAT<13:8>					
bit 7							bit 0

Legend:		
R = Readable bit	W = Writable bit	U = Unimplemented bit, read as ‘0’
u = Bit is unchanged	x = Bit is unknown	-n/n = Value at POR and BOR/Value at all other Resets
‘1’ = Bit is set	‘0’ = Bit is cleared	

bit 7-6 **Unimplemented:** Read as ‘0’

bit 5-0 **PMDAT<13:8>**: Read/write value for Most Significant bits of program memory

REGISTER 11-3: PMADRL: PROGRAM MEMORY ADDRESS LOW BYTE REGISTER

R/W-0/0	R/W-0/0	R/W-0/0	R/W-0/0	R/W-0/0	R/W-0/0	R/W-0/0	R/W-0/0
PMADR<7:0>							
bit 7							bit 0

Legend:		
R = Readable bit	W = Writable bit	U = Unimplemented bit, read as ‘0’
u = Bit is unchanged	x = Bit is unknown	-n/n = Value at POR and BOR/Value at all other Resets
‘1’ = Bit is set	‘0’ = Bit is cleared	

bit 7-0 **PMADR<7:0>**: Specifies the Least Significant bits for program memory address

REGISTER 11-4: PMADRH: PROGRAM MEMORY ADDRESS HIGH BYTE REGISTER

U-1(1)	R/W-0/0	R/W-0/0	R/W-0/0	R/W-0/0	R/W-0/0	R/W-0/0	R/W-0/0
—	PMADR<14:8>						
bit 7							bit 0

Legend:		
R = Readable bit	W = Writable bit	U = Unimplemented bit, read as ‘0’
u = Bit is unchanged	x = Bit is unknown	-n/n = Value at POR and BOR/Value at all other Resets
‘1’ = Bit is set	‘0’ = Bit is cleared	

bit 7 **Unimplemented:** Read as ‘1’

bit 6-0 **PMADR<14:8>**: Specifies the Most Significant bits for program memory address

Note 1: Unimplemented bit, read as ‘1’.

 © 2012 Microchip Technology Inc.

REGISTER 11-5: PMCON1: PROGRAM MEMORY CONTROL 1 REGISTER

U-1[1]	R/W-0/0	R/W-0/0	R/W/HC-0/0	R/W/HC-x/q[2]	R/W-0/0	R/S/HC-0/0	R/S/HC-0/0
—	CFGS	LWLO	FREE	WRERR	WREN	WR	RD
bit 7							bit 0

Legend:		
R = Readable bit	W = Writable bit	U = Unimplemented bit, read as ‘0’
S = Bit can only be set	x = Bit is unknown	-n/n = Value at POR and BOR/Value at all other Resets
‘1’ = Bit is set	‘0’ = Bit is cleared	HC = Bit is cleared by hardware

bit 7 **Unimplemented:** Read as ‘1’

bit 6 **CFGS:** Configuration Select bit
- 1 = Access Configuration, User ID and Device ID Registers
- 0 = Access Flash program memory

bit 5 **LWLO:** Load Write Latches Only bit[3]
- 1 = Only the addressed program memory write latch is loaded/updated on the next WR command
- 0 = The addressed program memory write latch is loaded/updated and a write of all program memory write latches will be initiated on the next WR command

bit 4 **FREE:** Program Flash Erase Enable bit
- 1 = Performs an erase operation on the next WR command (hardware cleared upon completion)
- 0 = Performs a write operation on the next WR command

bit 3 **WRERR:** Program/Erase Error Flag bit
- 1 = Condition indicates an improper program or erase sequence attempt or termination (bit is set automatically on any set attempt (write ‘1’) of the WR bit).
- 0 = The program or erase operation completed normally.

bit 2 **WREN:** Program/Erase Enable bit
- 1 = Allows program/erase cycles
- 0 = Inhibits programming/erasing of program Flash

bit 1 **WR:** Write Control bit
- 1 = Initiates a program Flash program/erase operation.
  The operation is self-timed and the bit is cleared by hardware once operation is complete.
  The WR bit can only be set (not cleared) in software.
- 0 = Program/erase operation to the Flash is complete and inactive.

bit 0 **RD:** Read Control bit
- 1 = Initiates a program Flash read. Read takes one cycle. RD is cleared in hardware. The RD bit can only be set (not cleared) in software.
- 0 = Does not initiate a program Flash read.

Note 1: Unimplemented bit, read as ‘1’.

2: The WRERR bit is automatically set by hardware when a program memory write or erase operation is started (WR = 1).

3: The LWLO bit is ignored during a program memory erase operation (FREE = 1).

REGISTER 11-6: PMCON2: PROGRAM MEMORY CONTROL 2 REGISTER

W-0/0	W-0/0	W-0/0	W-0/0	W-0/0	W-0/0	W-0/0	W-0/0
Program Memory Control Register 2							
bit 7							bit 0

Legend:		
R = Readable bit	W = Writable bit	U = Unimplemented bit, read as ‘0’
S = Bit can only be set	x = Bit is unknown	-n/n = Value at POR and BOR/Value at all other Resets
‘1’ = Bit is set	‘0’ = Bit is cleared	

bit 7-0 **Flash Memory Unlock Pattern bits**

To unlock writes, a 55h must be written first, followed by an AAh, before setting the WR bit of the PMCON1 register. The value written to this register is used to unlock the writes. There are specific timing requirements on these writes.

TABLE 11-3: SUMMARY OF REGISTERS ASSOCIATED WITH FLASH PROGRAM MEMORY

Name	Bit 7	Bit 6	Bit 5	Bit 4	Bit 3	Bit 2	Bit 1	Bit 0	Register on Page
INTCON	GIE	PEIE	TMR0IE	INTE	IOCIE	TMR0IF	INTF	IOCIF	96
PMCON1	—(1)	CFGS	LWLO	FREE	WRERR	WREN	WR	RD	127
PMCON2	Program Memory Control Register 2								128
PMADRL	PMADRL<7:0>								126
PMADRH	—(1)	PMADRH<6:0>							126
PMDATL	PMDATL<7:0>								125
PMDATH	—	—	PMDATH<5:0>						125

Legend: — = unimplemented location, read as ‘0’. Shaded cells are not used by Flash program memory.
Note 1: Unimplemented, read as ‘1’.

TABLE 11-4: SUMMARY OF CONFIGURATION WORD WITH FLASH PROGRAM MEMORY

Name	Bits	Bit -/7	Bit -/6	Bit 13/5	Bit 12/4	Bit 11/3	Bit 10/2	Bit 9/1	Bit 8/0	Register on Page
CONFIG1	13:8	—	—	FCMEN	IESO	$\overline{\text{CLKOUTEN}}$	BOREN<1:0>		—	52
	7:0	$\overline{\text{CP}}$	MCLRE	$\overline{\text{PWRTE}}$	WDTE<1:0>		FOSC<2:0>			
CONFIG2	13:8	—	—	LVP	$\overline{\text{DEBUG}}$	$\overline{\text{LPBOR}}$	BORV	STVREN	PLLEN	54
	7:0	PLLMULT	USBLSCLK	CPUDIV<1:0>		—	—	WRT<1:0>		

Legend: — = unimplemented location, read as ‘0’. Shaded cells are not used by Flash program memory.

 © 2012 Microchip Technology Inc.

12.0 I/O PORTS

Each port has three standard registers for its operation. These registers are:

- TRISx registers (data direction)
- PORTx registers (reads the levels on the pins of the device)
- LATx registers (output latch)

Some ports may have one or more of the following additional registers. These registers are:

- ANSELx (analog select)
- WPUx (weak pull-up)

In general, when a peripheral is enabled on a port pin, that pin cannot be used as a general purpose output. However, the pin can still be read.

TABLE 12-1: PORT AVAILABILITY PER DEVICE

Device	PORTA	PORTB	PORTC
PIC16(L)F1454/5	●		●
PIC16(L)F1459	●	●	●

The Data Latch (LATx registers) is useful for read-modify-write operations on the value that the I/O pins are driving.

A write operation to the LATx register has the same effect as a write to the corresponding PORTx register. A read of the LATx register reads of the values held in the I/O PORT latches, while a read of the PORTx register reads the actual I/O pin value.

Ports that support analog inputs have an associated ANSELx register. When an ANSEL bit is set, the digital input buffer associated with that bit is disabled. Disabling the input buffer prevents analog signal levels on the pin between a logic high and low from causing excessive current in the logic input circuitry. A simplified model of a generic I/O port, without the interfaces to other peripherals, is shown in Figure 12-1.

FIGURE 12-1: GENERIC I/O PORT OPERATION

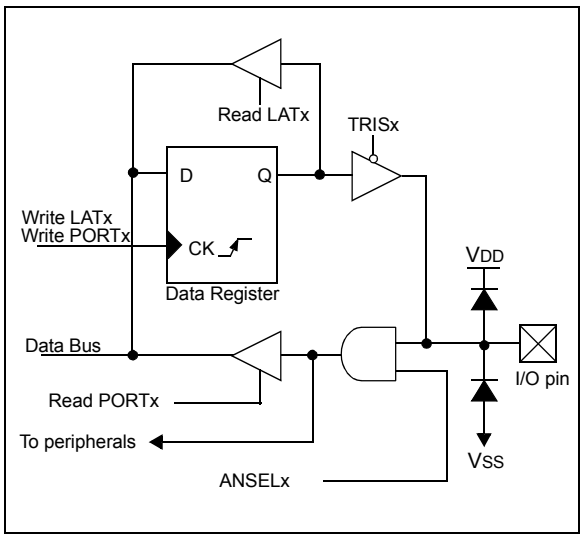

EXAMPLE 12-1: INITIALIZING PORTA

```
; This code example illustrates
; initializing the PORTA register. The
; other ports are initialized in the same
; manner.

BANKSEL  PORTA        ;
CLRF     PORTA        ;Init PORTA
BANKSEL  LATA         ;Data Latch
CLRF     LATA         ;
BANKSEL  ANSELA       ;
CLRF     ANSELA       ;digital I/O
BANKSEL  TRISA        ;
MOVLW    B'00111000'  ;Set RA<5:3> as inputs
MOVWF    TRISA        ;and set RA<2:0> as
                      ;outputs
```

12.1 Alternate Pin Function

The Alternate Pin Function Control register is used to steer specific peripheral input and output functions between different pins. The APFCON register is shown in Register 12-1. For this device family, the following functions can be moved between different pins.

- CLKR
- SDO
- $\overline{SS}$
- T1G
- P2

These bits have no effect on the values of any TRIS register. PORT and TRIS overrides will be routed to the correct pin. The unselected pin will be unaffected.

12.2 Register Definitions: Alternate Pin Function Control

REGISTER 12-1: APFCON: ALTERNATE PIN FUNCTION CONTROL REGISTER

R/W-0/0	R/W-0/0	R/W-0/0	U-0	R/W-0/0	R/W-0/0	U-0	U-0
CLKRSEL	SDOSEL(1)	SSSEL	—	T1GSEL	P2SEL(1)	—	—
bit 7							bit 0

Legend:		
R = Readable bit	W = Writable bit	U = Unimplemented bit, read as ‘0’
u = Bit is unchanged	x = Bit is unknown	-n/n = Value at POR and BOR/Value at all other Resets
‘1’ = Bit is set	‘0’ = Bit is cleared	

bit 7 **CLKRSEL:** Pin Selection bit
1 = CLKR function is on RC3
0 = CLKR function is on RA4

bit 6 **SDOSEL:** Pin Selection bit(1)
1 = SDO function is on RA4
0 = SDO function is on RC2

bit 5 **SSSEL:** Pin Selection bit
For 14-Pin Devices (PIC16(L)F1454/5):
1 = $\overline{SS}$ function is on RA3
0 = $\overline{SS}$ function is on RC3
For 20-Pin Devices (PIC16(L)F1455/9):
1 = $\overline{SS}$ function is on RA3
0 = $\overline{SS}$ function is on RC6

bit 4 **Unimplemented:** Read as ‘0’

bit 3 **T1GSEL:** Pin Selection bit
1 = T1G function is on RA3
0 = T1G function is on RA4

bit 2 **P2SEL:** Pin Selection bit(1)
1 = T1G function is on RA5
0 = T1G function is on RC3

bit 1-0 **Unimplemented:** Read as ‘0’

Note 1: PIC16(L)F1454/5 only.

 © 2012 Microchip Technology Inc.

12.3 PORTA Registers

12.3.1 DATA REGISTER

PORTA is a 5-bit wide, bidirectional port. The corresponding data direction register is TRISA (Register 12-3). Setting a TRISA bit (= 1) will make the corresponding PORTA pin an input (i.e., disable the output driver). Clearing a TRISA bit (= 0) will make the corresponding PORTA pin an output (i.e., enables output driver and puts the contents of the output latch on the selected pin). The exception is RA0, RA1 and RA3, which are input only and its TRIS bit will always read as '1'. Example 12-2 shows how to initialize an I/O port.

Reading the PORTA register (Register 12-2) reads the status of the pins, whereas writing to it will write to the PORT latch. All write operations are read-modify-write operations. Therefore, a write to a port implies that the port pins are read, this value is modified and then written to the PORT data latch (LATA).

12.3.2 DIRECTION CONTROL

The TRISA register (Register 12-3) controls the PORTA pin output drivers, even when they are being used as analog inputs. The user should ensure the bits in the TRISA register are maintained set when using them as analog inputs. I/O pins configured as analog input always read '0'.

12.3.3 ANALOG CONTROL

The ANSELA register (Register 12-5) is used to configure the Input mode of an I/O pin to analog. Setting the appropriate ANSELA bit high will cause all digital reads on the pin to be read as '0' and allow analog functions on the pin to operate correctly.

The state of the ANSELA bits has no effect on digital output functions. A pin with TRIS clear and ANSEL set will still operate as a digital output, but the Input mode will be analog. This can cause unexpected behavior when executing read-modify-write instructions on the affected port.

Note:	The ANSELA bits default to the Analog mode after Reset. To use any pins as digital general purpose or peripheral inputs, the corresponding ANSEL bits must be initialized to '0' by user software.

EXAMPLE 12-2: INITIALIZING PORTA

```
BANKSEL  PORTA       ;
CLRF     PORTA       ;Init PORTA
BANKSEL  LATA        ;Data Latch
CLRF     LATA        ;
BANKSEL  ANSELA      ;
CLRF     ANSELA      ;digital I/O
BANKSEL  TRISA       ;
MOVLW    B'00111000' ;Set RA<5:3> as inputs
MOVWF    TRISA       ;and set RA<2:0> as
                     ;outputs
```

12.3.4 PORTA FUNCTIONS AND OUTPUT PRIORITIES

Each PORTA pin is multiplexed with other functions. The pins, their combined functions and their output priorities are shown in Table 12-2.

When multiple outputs are enabled, the actual pin control goes to the peripheral with the highest priority.

Analog input functions, such as ADC and comparator inputs, are not shown in the priority lists. These inputs are active when the I/O pin is set for Analog mode using the ANSELx registers. Digital output functions may control the pin when it is in Analog mode with the priority shown below in Table 12-2.

TABLE 12-2: PORTA OUTPUT PRIORITY

Pin Name	Function Priority(1)
RA0	ICSPDAT(4)
RA1	ICSPCLK(4)
RA2	VUSB3V3
RA3	None
RA4	CLKOUT SOSCO CLKR(2) SDO(3) RA4
RA5	PWM2(3) RA5

Note 1: Priority listed from highest to lowest.
2: Default pin (see APFCON register).
3: Alternate pin (see APFCON register).
4: LVP only.

12.4 Register Definitions: PORTA

REGISTER 12-2: PORTA: PORTA REGISTER

U-0	U-0	R/W-x/x	R/W-x/x	R-x/x	U-0	R-x/x	R-x/x
—	—	RA5	RA4	RA3	—	RA1	RA0
bit 7							bit 0

Legend:		
R = Readable bit	W = Writable bit	U = Unimplemented bit, read as ‘0’
u = Bit is unchanged	x = Bit is unknown	-n/n = Value at POR and BOR/Value at all other Resets
‘1’ = Bit is set	‘0’ = Bit is cleared	

bit 7-6 **Unimplemented:** Read as ‘0’

bit 5-3 **RA<5:3>**: PORTA I/O Value bits(1)
1 = Port pin is ≥ V_{IH}
0 = Port pin is ≤ V_{IL}

bit 2 **Unimplemented:** Read as ‘0’

bit 1-0 **RA<1:0>**: PORTA I/O Value bits(1)
1 = Port pin is ≥ V_{IH}
0 = Port pin is ≤ V_{IL}

Note 1: Writes to PORTA are actually written to corresponding LATA register. Reads from PORTA register is return of actual I/O pin values.

REGISTER 12-3: TRISA: PORTA TRI-STATE REGISTER

U-0	U-0	R/W-1/1	R/W-1/1	U-1	U-0	U-1	U-1
—	—	TRISA5	TRISA4	—(1)	—	—(1)	—(1)
bit 7							bit 0

Legend:		
R = Readable bit	W = Writable bit	U = Unimplemented bit, read as ‘0’
u = Bit is unchanged	x = Bit is unknown	-n/n = Value at POR and BOR/Value at all other Resets
‘1’ = Bit is set	‘0’ = Bit is cleared	

bit 7-6 **Unimplemented:** Read as ‘0’

bit 5-4 **TRISA<5:4>:** PORTA Tri-State Control bit
1 = PORTA pin configured as an input (tri-stated)
0 = PORTA pin configured as an output

bit 3 **Unimplemented:** Read as ‘1’

bit 2 **Unimplemented:** Read as ‘0’

bit 1-0 **Unimplemented:** Read as ‘1’

Note 1: Unimplemented, read as ‘1’.

 © 2012 Microchip Technology Inc.

REGISTER 12-4: LATA: PORTA DATA LATCH REGISTER

U-0	U-0	R/W-x/u	R/W-x/u	U-0	U-0	U-0	U-0
—	—	LATA5	LATA4	—	—	—	—
bit 7							bit 0

Legend:		
R = Readable bit	W = Writable bit	U = Unimplemented bit, read as ‘0’
u = Bit is unchanged	x = Bit is unknown	-n/n = Value at POR and BOR/Value at all other Resets
‘1’ = Bit is set	‘0’ = Bit is cleared	

bit 7-6 **Unimplemented:** Read as ‘0’

bit 5-4 **LATA<5:4>**: RA<5:4> Output Latch Value bits(1)

bit 3-0 **Unimplemented:** Read as ‘0’

Note 1: Writes to PORTA are actually written to corresponding LATA register. Reads from PORTA register is return of actual I/O pin values.

REGISTER 12-5: ANSELA: PORTA ANALOG SELECT REGISTER(2)

U-0	U-0	U-0	R/W-1/1	U-0	U-0	U-0	U-0
—	—	—	ANSA4	—	—	—	—
bit 7							bit 0

Legend:		
R = Readable bit	W = Writable bit	U = Unimplemented bit, read as ‘0’
u = Bit is unchanged	x = Bit is unknown	-n/n = Value at POR and BOR/Value at all other Resets
‘1’ = Bit is set	‘0’ = Bit is cleared	

bit 7-5 **Unimplemented:** Read as ‘0’

bit 4 **ANSA4**: Analog Select between Analog or Digital Function on pins RA4, respectively
1 = Analog input. Pin is assigned as analog input(1). Digital input buffer disabled.
0 = Digital I/O. Pin is assigned to port or digital special function.

bit 3-0 **Unimplemented:** Read as ‘0’

Note 1: When setting a pin to an analog input, the corresponding TRIS bit must be set to Input mode in order to allow external control of the voltage on the pin.

2: PIC16(L)F1455/9 only.

REGISTER 12-6: WPUA: WEAK PULL-UP PORTA REGISTER

U-0	U-0	R/W-1/1	R/W-1/1	R/W-1/1	U-0	U-0	U-0
—	—	WPUA5	WPUA4	WPUA3	—	—	—
bit 7							bit 0

Legend:		
R = Readable bit	W = Writable bit	U = Unimplemented bit, read as ‘0’
u = Bit is unchanged	x = Bit is unknown	-n/n = Value at POR and BOR/Value at all other Resets
‘1’ = Bit is set	‘0’ = Bit is cleared	

bit 7-6 **Unimplemented:** Read as ‘0’

bit 5-3 **WPUA<5:3>**: Weak Pull-up Register bits(3)
1 = Pull-up enabled
0 = Pull-up disabled

bit 2-0 **Unimplemented:** Read as ‘0’

Note 1: Global $\overline{\text{WPUEN}}$ bit of the OPTION_REG register must be cleared for individual pull-ups to be enabled.
2: The weak pull-up device is automatically disabled if the pin is configured as an output.
3: For the WPUA3 bit, when MCLRE = 1, weak pull-up is internally enabled, but not reported here.

TABLE 12-3: SUMMARY OF REGISTERS ASSOCIATED WITH PORTA

Name	Bit 7	Bit 6	Bit 5	Bit 4	Bit 3	Bit 2	Bit 1	Bit 0	Register on Page
ANSELA(3)	—	—	—	ANSA4	—	—	—	—	133
APFCON	CLKRSEL	SDOSEL(2)	SSSEL	—	T1GSEL	P2SEL(2)	—	—	130
LATA	—	—	LATA5	LATA4	—	—	—	—	133
OPTION_REG	$\overline{\text{WPUEN}}$	INTEDG	TMR0CS	TMR0SE	PSA	PS<2:0>			185
PORTA	—	—	RA5	RA4	RA3	—	RA1	RA0	132
TRISA	—	—	TRISA5	TRISA4	—(1)	—	—(1)	—(1)	132
WPUA	—	—	WPUA5	WPUA4	WPUA3	—	—	—	134

Legend: x = unknown, u = unchanged, – = unimplemented locations read as ‘0’. Shaded cells are not used by PORTA.
Note 1: Unimplemented, read as ‘1’.
2: PIC16(L)F1454/5 only.
3: PIC16(L)F1455/9 only.

TABLE 12-4: SUMMARY OF CONFIGURATION WORD WITH PORTA

Name	Bits	Bit -/7	Bit -/6	Bit 13/5	Bit 12/4	Bit 11/3	Bit 10/2	Bit 9/1	Bit 8/0	Register on Page
CONFIG1	13:8	—	—	FCMEN	IESO	$\overline{\text{CLKOUTEN}}$	BOREN<1:0>		—	52
	7:0	$\overline{\text{CP}}$	MCLRE	$\overline{\text{PWRTE}}$	WDTE<1:0>		FOSC<2:0>			

Legend: — = unimplemented location, read as ‘0’. Shaded cells are not used by PORTA.

 © 2012 Microchip Technology Inc.

12.5 PORTB Registers (PIC16(L)F1455/9 only)

12.5.1 DATA REGISTER

PORTB is a 4-bit wide, bidirectional port. The corresponding data direction register is TRISB (Register 12-3). Setting a TRISB bit (= 1) will make the corresponding PORTB pin an input (i.e., disable the output driver). Clearing a TRISB bit (= 0) will make the corresponding PORTB pin an output (i.e., enables output driver and puts the contents of the output latch on the selected pin). Example 12-2 shows how to initialize an I/O port.

Reading the PORTB register (Register 12-2) reads the status of the pins, whereas writing to it will write to the PORT latch. All write operations are read-modify-write operations. Therefore, a write to a port implies that the port pins are read, this value is modified and then written to the PORT data latch (LATB).

12.5.2 DIRECTION CONTROL

The TRISB register (Register 12-3) controls the PORTB pin output drivers, even when they are being used as analog inputs. The user should ensure the bits in the TRISB register are maintained set when using them as analog inputs. I/O pins configured as analog input always read '0'.

12.5.3 ANALOG CONTROL

The ANSELB register (Register 12-5) is used to configure the Input mode of an I/O pin to analog. Setting the appropriate ANSELB bit high will cause all digital reads on the pin to be read as '0' and allow analog functions on the pin to operate correctly.

The state of the ANSELB bits has no effect on digital output functions. A pin with TRIS clear and ANSEL set will still operate as a digital output, but the Input mode will be analog. This can cause unexpected behavior when executing read-modify-write instructions on the affected port.

Note:	The ANSELB bits default to the Analog mode after Reset. To use any pins as digital general purpose or peripheral inputs, the corresponding ANSEL bits must be initialized to '0' by user software.

12.5.4 PORTB FUNCTIONS AND OUTPUT PRIORITIES

Each PORTB pin is multiplexed with other functions. The pins, their combined functions and their output priorities are shown in Table 12-2.

When multiple outputs are enabled, the actual pin control goes to the peripheral with the highest priority.

Analog input functions, such as ADC and comparator inputs, are not shown in the priority lists. These inputs are active when the I/O pin is set for Analog mode using the ANSELx registers. Digital output functions may control the pin when it is in Analog mode with the priority shown below in Table 12-2.

TABLE 12-5: PORTB OUTPUT PRIORITY

Pin Name	Function Priority(1)
RB4	SDA RB4
RB5	RX RB5
RB6	SCL SCK RB6
RB7	TX RB7

Note 1: Priority listed from highest to lowest.
2: Default pin (see APFCON register).
3: Alternate pin (see APFCON register).

12.6 Register Definitions: PORTB

REGISTER 12-7: PORTB: PORTB REGISTER

R/W-x/x	R/W-x/x	R/W-x/x	R/W-x/x	U-0	U-0	U-0	U-0
RB7	RB6	RB5	RB4	—	—	—	—
bit 7							bit 0

Legend:		
R = Readable bit	W = Writable bit	U = Unimplemented bit, read as ‘0’
u = Bit is unchanged	x = Bit is unknown	-n/n = Value at POR and BOR/Value at all other Resets
‘1’ = Bit is set	‘0’ = Bit is cleared	

bit 7-4 **RB<7:4>**: PORTB I/O Value bits[(1)]
1 = Port pin is ≥ V_{IH}
0 = Port pin is ≤ V_{IL}

bit 3-0 **Unimplemented:** Read as ‘0’

Note 1: Writes to PORTB are actually written to corresponding LATB register. Reads from PORTB register is return of actual I/O pin values.

REGISTER 12-8: TRISB: PORTB TRI-STATE REGISTER

R/W-1/1	R/W-1/1	R/W-1/1	R/W-1/1	U-0	U-0	U-0	U-0
TRISB7	TRISB6	TRISB5	TRISB4	—	—	—	—
bit 7							bit 0

Legend:		
R = Readable bit	W = Writable bit	U = Unimplemented bit, read as ‘0’
u = Bit is unchanged	x = Bit is unknown	-n/n = Value at POR and BOR/Value at all other Resets
‘1’ = Bit is set	‘0’ = Bit is cleared	

bit 7-4 **TRISB<7:4>**: PORTB Tri-State Control bits
1 = PORTB pin configured as an input (tri-stated)
0 = PORTB pin configured as an output

bit 3-0 **Unimplemented:** Read as ‘0’

 © 2012 Microchip Technology Inc.

REGISTER 12-9: LATB: PORTB DATA LATCH REGISTER

R/W-x/u	R/W-x/u	R/W-x/u	R/W-x/u	U-0	U-0	U-0	U-0
LATB7	LATB6	LATB5	LATB4	—	—	—	—
bit 7							bit 0

Legend:		
R = Readable bit	W = Writable bit	U = Unimplemented bit, read as ‘0’
u = Bit is unchanged	x = Bit is unknown	-n/n = Value at POR and BOR/Value at all other Resets
‘1’ = Bit is set	‘0’ = Bit is cleared	

bit 7-4 **LATB<7:4>**: RB<7:4> Output Latch Value bits(1)

bit 3-0 **Unimplemented:** Read as ‘0’

Note 1: Writes to PORTB are actually written to corresponding LATB register. Reads from PORTB register is return of actual I/O pin values.

REGISTER 12-10: ANSELB: PORTB ANALOG SELECT REGISTER

U-0	U-0	R/W-1/1	R/W-1/1	U-0	U-0	U-0	U-0
—	—	ANSB5	ANSB4	—	—	—	—
bit 7							bit 0

Legend:		
R = Readable bit	W = Writable bit	U = Unimplemented bit, read as ‘0’
u = Bit is unchanged	x = Bit is unknown	-n/n = Value at POR and BOR/Value at all other Resets
‘1’ = Bit is set	‘0’ = Bit is cleared	

bit 7-6 **Unimplemented:** Read as ‘0’

bit 5-4 **ANSB<5:4>**: Analog Select between Analog or Digital Function on pins RB<5:4>, respectively
1 = Analog input. Pin is assigned as analog input(1). Digital input buffer disabled.
0 = Digital I/O. Pin is assigned to port or digital special function.

bit 3-0 **Unimplemented:** Read as ‘0’

Note 1: When setting a pin to an analog input, the corresponding TRIS bit must be set to Input mode in order to allow external control of the voltage on the pin.

REGISTER 12-11: WPUB: WEAK PULL-UP PORTB REGISTER

R/W-1/1	R/W-1/1	R/W-1/1	R/W-1/1	U-0	U-0	U-0	U-0
WPUB7	WPUB6	WPUB5	WPUB4	—	—	—	—
bit 7							bit 0

Legend:		
R = Readable bit	W = Writable bit	U = Unimplemented bit, read as ‘0’
u = Bit is unchanged	x = Bit is unknown	-n/n = Value at POR and BOR/Value at all other Resets
‘1’ = Bit is set	‘0’ = Bit is cleared	

bit 7-4 **WPUB<7:4>**: Weak Pull-up Register bits
1 = Pull-up enabled
0 = Pull-up disabled

bit 3-0 **Unimplemented:** Read as ‘0’

Note 1: Global $\overline{\text{WPUEN}}$ bit of the OPTION_REG register must be cleared for individual pull-ups to be enabled.
2: The weak pull-up device is automatically disabled if the pin is configured as an output.

TABLE 12-6: SUMMARY OF REGISTERS ASSOCIATED WITH PORTB(1)

Name	Bit 7	Bit 6	Bit 5	Bit 4	Bit 3	Bit 2	Bit 1	Bit 0	Register on Page
ANSELB	—	—	ANSB5	ANSB4	—	—	—	—	137
APFCON	CLKRSEL	SDOSEL(1)	SSSEL	—	T1GSEL	P2SEL(1)	—	—	130
LATB	LATB7	LATB6	LATB5	LATB4	—	—	—	—	137
OPTION_REG	$\overline{\text{WPUEN}}$	INTEDG	TMR0CS	TMR0SE	PSA	PS<2:0>			185
PORTB	RB7	RB6	RB5	RB4	—	—	—	—	136
TRISB	TRISB7	TRISB6	TRISB5	TRISB4	—	—	—	—	136
WPUB	WPUB7	WPUB6	WPUB5	WPUB4	—	—	—	—	138

Legend: x = unknown, u = unchanged, – = unimplemented locations read as ‘0’. Shaded cells are not used by PORTB.
Note 1: PIC16(L)F1459 only.

TABLE 12-7: SUMMARY OF CONFIGURATION WORD WITH PORTB

Name	Bits	Bit -/7	Bit -/6	Bit 13/5	Bit 12/4	Bit 11/3	Bit 10/2	Bit 9/1	Bit 8/0	Register on Page
CONFIG1	13:8	—	—	FCMEN	IESO	$\overline{\text{CLKOUTEN}}$	BOREN<1:0>		—	52
	7:0	$\overline{\text{CP}}$	MCLRE	$\overline{\text{PWRTE}}$	WDTE<1:0>		FOSC<2:0>			

Legend: — = unimplemented location, read as ‘0’. Shaded cells are not used by PORTB.

 © 2012 Microchip Technology Inc.

12.7 PORTC Registers

12.7.1 DATA REGISTER

PORTC is a 8-bit wide, bidirectional port. The corresponding data direction register is TRISC (Register 12-13). Setting a TRISC bit (= 1) will make the corresponding PORTC pin an input (i.e., put the corresponding output driver in a High-Impedance mode). Clearing a TRISC bit (= 0) will make the corresponding PORTC pin an output (i.e., enable the output driver and put the contents of the output latch on the selected pin). Example 12-2 shows how to initialize an I/O port.

Reading the PORTC register (Register 12-12) reads the status of the pins, whereas writing to it will write to the PORT latch. All write operations are read-modify-write operations. Therefore, a write to a port implies that the port pins are read, this value is modified and then written to the PORT data latch (LATC).

12.7.2 DIRECTION CONTROL

The TRISC register (Register 12-13) controls the PORTC pin output drivers, even when they are being used as analog inputs. The user should ensure the bits in the TRISC register are maintained set when using them as analog inputs. I/O pins configured as analog input always read '0'.

12.7.3 ANALOG CONTROL

The ANSELC register (Register 12-15) is used to configure the Input mode of an I/O pin to analog. Setting the appropriate ANSELC bit high will cause all digital reads on the pin to be read as '0' and allow analog functions on the pin to operate correctly.

The state of the ANSELC bits has no effect on digital output functions. A pin with TRIS clear and ANSELC set will still operate as a digital output, but the Input mode will be analog. This can cause unexpected behavior when executing read-modify-write instructions on the affected port.

Note:	The ANSELC bits default to the Analog mode after Reset. To use any pins as digital general purpose or peripheral inputs, the corresponding ANSEL bits must be initialized to '0' by user software.

12.7.4 PORTC FUNCTIONS AND OUTPUT PRIORITIES

Each PORTC pin is multiplexed with other functions. The pins, their combined functions and their output priorities are shown in Table 12-8.

When multiple outputs are enabled, the actual pin control goes to the peripheral with the highest priority.

Analog input and some digital input functions are not included in the output priority list. These input functions can remain active when the pin is configured as an output. Certain digital input functions override other port functions and are included in the output priority list.

TABLE 12-8: PORTC OUTPUT PRIORITY

Pin Name	Function Priority(1)
RC0	ICSPDAT SCL(4) SCK(4)
RC1	ICSPCLK SDA(4) SDI(4) RC1
RC2	DACOUT1 SDO(2) RC2
RC3	DACOUT2 CLKR(3) PWM2(2) RC3
RC4	CWG1B C1OUT C2OUT TX(4) RC4
RC5	CWG1A PWM1 RX(4) RC5
RC6	PWM2(5) RC6
RC7	SDO(5) RC7

Note 1: Priority listed from highest to lowest.
2: Default pin (see APFCON register).
3: Alternate pin (see APFCON register).
4: PIC16(L)F1454/5 only.
5: PIC16(L)F1455/9 only.

12.8 Register Definitions: PORTC

REGISTER 12-12: PORTC: PORTC REGISTER

R/W-x/u	R/W-x/u	R/W-x/u	R/W-x/u	R/W-x/u	R/W-x/u	R/W-x/u	R/W-x/u
RC7(1)	RC6(1)	RC5	RC4	RC3	RC2	RC1	RC0
bit 7							bit 0

Legend:		
R = Readable bit	W = Writable bit	U = Unimplemented bit, read as ‘0’
u = Bit is unchanged	x = Bit is unknown	-n/n = Value at POR and BOR/Value at all other Resets
‘1’ = Bit is set	‘0’ = Bit is cleared	

bit 7-0 **RC<7:0>**: PORTC General Purpose I/O Pin bits
1 = Port pin is ≥ V_{IH}
0 = Port pin is ≤ V_{IL}

Note 1: PIC16(L)F1459 only.

REGISTER 12-13: TRISC: PORTC TRI-STATE REGISTER

R/W-1/1	R/W-1/1	R/W-1/1	R/W-1/1	R/W-1/1	R/W-1/1	R/W-1/1	R/W-1/1
TRISC7(1)	TRISC6(1)	TRISC5	TRISC4	TRISC3	TRISC2	TRISC1	TRISC0
bit 7							bit 0

Legend:		
R = Readable bit	W = Writable bit	U = Unimplemented bit, read as ‘0’
u = Bit is unchanged	x = Bit is unknown	-n/n = Value at POR and BOR/Value at all other Resets
‘1’ = Bit is set	‘0’ = Bit is cleared	

bit 7-0 **TRISC<7:0>:** PORTC Tri-State Control bits
1 = PORTC pin configured as an input (tri-stated)
0 = PORTC pin configured as an output

Note 1: PIC16(L)F1459 only.

 © 2012 Microchip Technology Inc.

REGISTER 12-14: LATC: PORTC DATA LATCH REGISTER

R/W-x/u	R/W-x/u	R/W-x/u	R/W-x/u	R/W-x/u	R/W-x/u	R/W-x/u	R/W-x/u
LATC7(1)	LATC6(1)	LATC5	LATC4	LATC3	LATC2	LATC1	LATC0
bit 7							bit 0

Legend:		
R = Readable bit	W = Writable bit	U = Unimplemented bit, read as ‘0’
u = Bit is unchanged	x = Bit is unknown	-n/n = Value at POR and BOR/Value at all other Resets
‘1’ = Bit is set	‘0’ = Bit is cleared	

bit 7-0 **LATC<7:0>**: PORTC Output Latch Value bits(1)

Note 1: Writes to PORTC are actually written to corresponding LATC register. Reads from PORTC register is return of actual I/O pin values.

2: PIC16(L)F1459 only.

REGISTER 12-15: ANSELC: PORTC ANALOG SELECT REGISTER

R/W-1/1	R/W-1/1	U-0	U-0	R/W-1/1	R/W-1/1	R/W-1/1	R/W-1/1
ANSC7(1)	ANSC6(1)	—	—	ANSC3	ANSC2	ANSC1	ANSC0
bit 7							bit 0

Legend:		
R = Readable bit	W = Writable bit	U = Unimplemented bit, read as ‘0’
u = Bit is unchanged	x = Bit is unknown	-n/n = Value at POR and BOR/Value at all other Resets
‘1’ = Bit is set	‘0’ = Bit is cleared	

bit 7-6 **ANSC<7:6>**: Analog Select between Analog or Digital Function on pins RC<7:6>, respectively
1 = Analog input. Pin is assigned as analog input(1). Digital input buffer disabled.
0 = Digital I/O. Pin is assigned to port or digital special function.

bit 5-4 **Unimplemented:** Read as ‘0’

bit 3-0 **ANSC<3:0>**: Analog Select between Analog or Digital Function on pins RC<3:0>, respectively
1 = Analog input. Pin is assigned as analog input(1). Digital input buffer disabled.
0 = Digital I/O. Pin is assigned to port or digital special function.

Note 1: When setting a pin to an analog input, the corresponding TRIS bit must be set to Input mode in order to allow external control of the voltage on the pin.

2: PIC16(L)F1459 only.

TABLE 12-9: SUMMARY OF REGISTERS ASSOCIATED WITH PORTC

Name	Bit 7	Bit 6	Bit 5	Bit 4	Bit 3	Bit 2	Bit 1	Bit 0	Register on Page
ANSELC(2)	ANSC7(1)	ANSC6(1)	—	—	ANSC3	ANSC2	ANSC1	ANSC0	141
LATC	LATC7(1)	LATC6(1)	LATC5	LATC4	LATC3	LATC2	LATC1	LATC0	141
PORTC	RC7(1)	RC6(1)	RC5	RC4	RC3	RC2	RC1	RC0	140
TRISC	TRISC7(1)	TRISC6(1)	TRISC5	TRISC4	TRISC3	TRISC2	TRISC1	TRISC0	140

Legend: x = unknown, u = unchanged, - = unimplemented locations read as ‘0’. Shaded cells are not used by PORTC.

Note 1: PIC16(L)F1459 only.

2: PIC16(L)F1455/9 only.

NOTES:

 © 2012 Microchip Technology Inc.

13.0 INTERRUPT-ON-CHANGE

The PORTA and PORTB pins can be configured to operate as Interrupt-On-Change (IOC) pins. An interrupt can be generated by detecting a signal that has either a rising edge or a falling edge. Any individual port pin, or combination of port pins, can be configured to generate an interrupt. The interrupt-on-change module has the following features:

- Interrupt-on-Change enable (Master Switch)
- Individual pin configuration
- Rising and falling edge detection
- Individual pin interrupt flags

Figure 13-1 is a block diagram of the IOC module.

13.1 Enabling the Module

To allow individual port pins to generate an interrupt, the IOCIE bit of the INTCON register must be set. If the IOCIE bit is disabled, the edge detection on the pin will still occur, but an interrupt will not be generated.

13.2 Individual Pin Configuration

For each port pin, a rising edge detector and a falling edge detector are present. To enable a pin to detect a rising edge, the associated bit of the IOCxP register is set. To enable a pin to detect a falling edge, the associated bit of the IOCxN register is set.

A pin can be configured to detect rising and falling edges simultaneously by setting both associated bits of the IOCxP and IOCxN registers, respectively.

13.3 Interrupt Flags

The IOCAFx and IOCBFx bits located in the IOCAF and IOCBF registers, respectively, are status flags that correspond to the interrupt-on-change pins of the associated port. If an expected edge is detected on an appropriately enabled pin, then the status flag for that pin will be set, and an interrupt will be generated if the IOCIE bit is set. The IOCIF bit of the INTCON register reflects the status of all IOCAFx and IOCBFx bits.

13.4 Clearing Interrupt Flags

The individual status flags, (IOCAFx and IOCBFx bits), can be cleared by resetting them to zero. If another edge is detected during this clearing operation, the associated status flag will be set at the end of the sequence, regardless of the value actually being written.

In order to ensure that no detected edge is lost while clearing flags, only AND operations masking out known changed bits should be performed. The following sequence is an example of what should be performed.

EXAMPLE 13-1: CLEARING INTERRUPT FLAGS (PORTA EXAMPLE)

```
MOVLW   0xff
XORWF   IOCAF, W
ANDWF   IOCAF, F
```

13.5 Operation in Sleep

The interrupt-on-change interrupt sequence will wake the device from Sleep mode, if the IOCIE bit is set.

If an edge is detected while in Sleep mode, the IOCxF register will be updated prior to the first instruction executed out of Sleep.

FIGURE 13-1: INTERRUPT-ON-CHANGE BLOCK DIAGRAM (PORTA EXAMPLE)

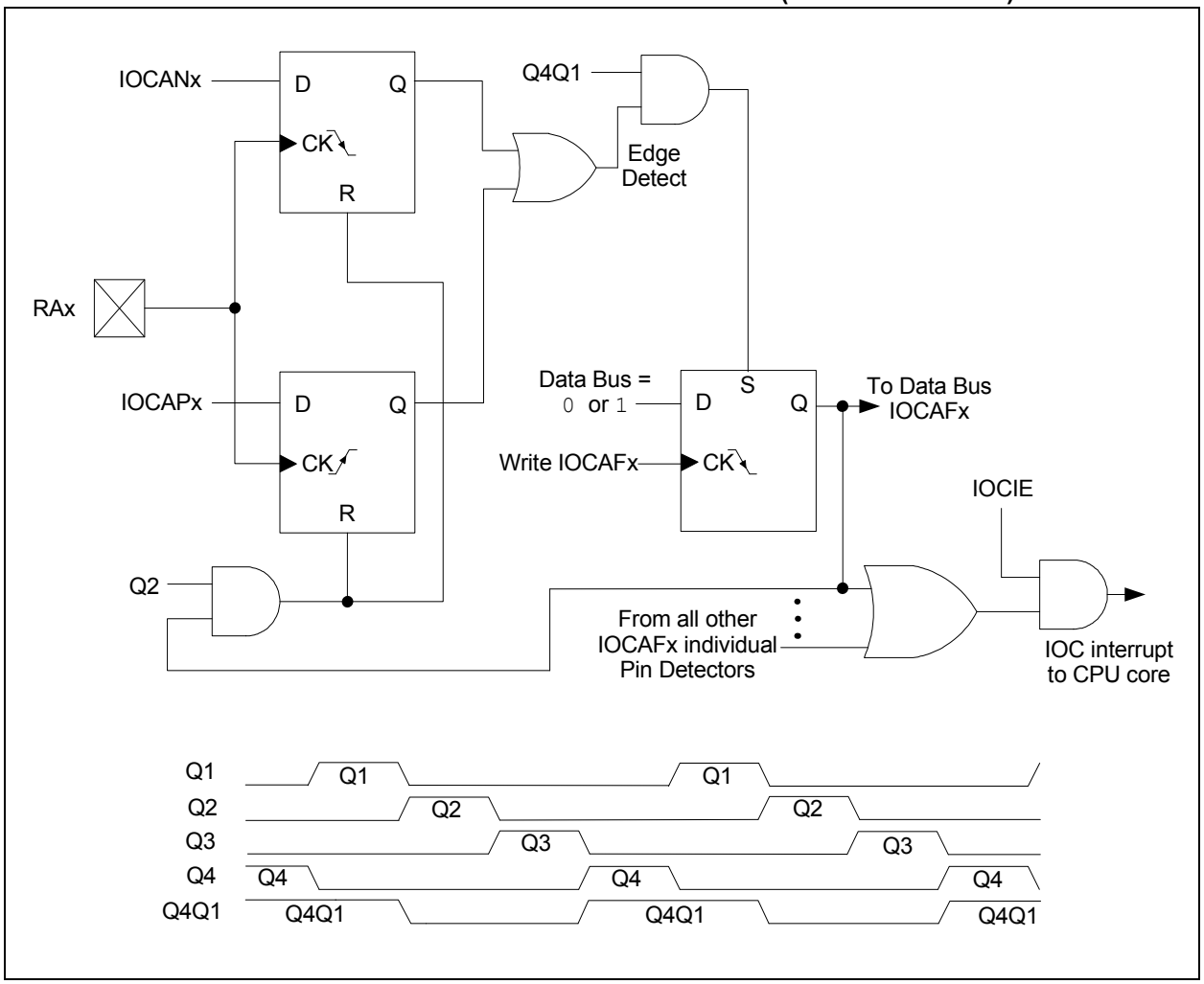

 © 2012 Microchip Technology Inc.

13.6 Register Definitions: Interrupt-on-change Control

REGISTER 13-1: IOCAP: INTERRUPT-ON-CHANGE PORTA POSITIVE EDGE REGISTER

U-0	U-0	R/W-0/0	R/W-0/0	R/W-0/0	U-0	R/W-0/0	R/W-0/0
—	—	IOCAP5	IOCAP4	IOCAP3	—	IOCAP1	IOCAP0
bit 7							bit 0

Legend:		
R = Readable bit	W = Writable bit	U = Unimplemented bit, read as ‘0’
u = Bit is unchanged	x = Bit is unknown	-n/n = Value at POR and BOR/Value at all other Resets
‘1’ = Bit is set	‘0’ = Bit is cleared	

bit 7-6 **Unimplemented:** Read as ‘0’

bit 5-3 **IOCAP<5:3>:** Interrupt-on-Change PORTA Positive Edge Enable bits
1 = Interrupt-on-Change enabled on the pin for a positive going edge. IOCAFx bit and IOCIF flag will be set upon detecting an edge.
0 = Interrupt-on-Change disabled for the associated pin.

bit 2 **Unimplemented:** Read as ‘0’

bit 1-0 **IOCAP<1:0>:** Interrupt-on-Change PORTA Positive Edge Enable bits
1 = Interrupt-on-Change enabled on the pin for a positive going edge. IOCAFx bit and IOCIF flag will be set upon detecting an edge.
0 = Interrupt-on-Change disabled for the associated pin.

REGISTER 13-2: IOCAN: INTERRUPT-ON-CHANGE PORTA NEGATIVE EDGE REGISTER

U-0	U-0	R/W-0/0	R/W-0/0	R/W-0/0	U-0	R/W-0/0	R/W-0/0
—	—	IOCAN5	IOCAN4	IOCAN3	—	IOCAN1	IOCAN0
bit 7							bit 0

Legend:		
R = Readable bit	W = Writable bit	U = Unimplemented bit, read as ‘0’
u = Bit is unchanged	x = Bit is unknown	-n/n = Value at POR and BOR/Value at all other Resets
‘1’ = Bit is set	‘0’ = Bit is cleared	

bit 7-6 **Unimplemented:** Read as ‘0’

bit 5-3 **IOCAN<5:3>:** Interrupt-on-Change PORTA Negative Edge Enable bits
1 = Interrupt-on-Change enabled on the pin for a negative going edge. IOCAFx bit and IOCIF flag will be set upon detecting an edge.
0 = Interrupt-on-Change disabled for the associated pin.

bit 2 **Unimplemented:** Read as ‘0’

bit 1-0 **IOCAN<1:0>:** Interrupt-on-Change PORTA Negative Edge Enable bits
1 = Interrupt-on-Change enabled on the pin for a negative going edge. IOCAFx bit and IOCIF flag will be set upon detecting an edge.
0 = Interrupt-on-Change disabled for the associated pin.

REGISTER 13-3: IOCAF: INTERRUPT-ON-CHANGE PORTA FLAG REGISTER

U-0	U-0	R/W/HS-0/0	R/W/HS-0/0	R/W/HS-0/0	U-0	R/W/HS-0/0	R/W/HS-0/0
—	—	IOCAF5	IOCAF4	IOCAF3	—	IOCAF1	IOCAF0
bit 7							bit 0

Legend:		
R = Readable bit	W = Writable bit	U = Unimplemented bit, read as ‘0’
u = Bit is unchanged	x = Bit is unknown	-n/n = Value at POR and BOR/Value at all other Resets
‘1’ = Bit is set	‘0’ = Bit is cleared	HS - Bit is set in hardware

bit 7-6 **Unimplemented:** Read as ‘0’

bit 5-3 **IOCAF<5:3>:** Interrupt-on-Change PORTA Flag bits
1 = An enabled change was detected on the associated pin.
Set when IOCAPx = 1 and a rising edge was detected on RAx, or when IOCANx = 1 and a falling edge was detected on RAx.
0 = No change was detected, or the user cleared the detected change.

bit 2 **Unimplemented:** Read as ‘0’

bit 1-0 **IOCAF<‘:0>:** Interrupt-on-Change PORTA Flag bits
1 = An enabled change was detected on the associated pin.
Set when IOCAPx = 1 and a rising edge was detected on RAx, or when IOCANx = 1 and a falling edge was detected on RAx.
0 = No change was detected, or the user cleared the detected change.

REGISTER 13-4: IOCBP: INTERRUPT-ON-CHANGE PORTB POSITIVE EDGE REGISTER(1)

R/W-0/0	R/W-0/0	R/W-0/0	R/W-0/0	U-0	U-0	U-0	U-0
IOCBP7	IOCBP6	IOCBP5	IOCBP4	—	—	—	—
bit 7							bit 0

Legend:		
R = Readable bit	W = Writable bit	U = Unimplemented bit, read as ‘0’
u = Bit is unchanged	x = Bit is unknown	-n/n = Value at POR and BOR/Value at all other Resets
‘1’ = Bit is set	‘0’ = Bit is cleared	

bit 7-4 **IOCBP<7:4>:** Interrupt-on-Change PORTB Positive Edge Enable bits
1 = Interrupt-on-Change enabled on the pin for a positive going edge. IOCBFx bit and IOCIF flag will be set upon detecting an edge.
0 = Interrupt-on-Change disabled for the associated pin.

bit 3-0 **Unimplemented:** Read as ‘0’

Note 1: PIC16(L)F1459 only.

 © 2012 Microchip Technology Inc.

REGISTER 13-5: IOCBN: INTERRUPT-ON-CHANGE PORTB NEGATIVE EDGE REGISTER(1)

R/W-0/0	R/W-0/0	R/W-0/0	R/W-0/0	U-0	U-0	U-0	U-0
IOCBN7	IOCBN6	IOCBN5	IOCBN4	—	—	—	—
bit 7							bit 0

Legend:		
R = Readable bit	W = Writable bit	U = Unimplemented bit, read as ‘0’
u = Bit is unchanged	x = Bit is unknown	-n/n = Value at POR and BOR/Value at all other Resets
‘1’ = Bit is set	‘0’ = Bit is cleared	

bit 7-4 **IOCBN<7:4>:** Interrupt-on-Change PORTB Negative Edge Enable bits
1 = Interrupt-on-Change enabled on the pin for a negative going edge. IOCBFx bit and IOCIF flag will be set upon detecting an edge.
0 = Interrupt-on-Change disabled for the associated pin.

bit 3-0 **Unimplemented:** Read as ‘0’

Note 1: PIC16(L)F1459 only.

REGISTER 13-6: IOCBF: INTERRUPT-ON-CHANGE PORTB FLAG REGISTER(1)

R/W/HS-0/0	R/W/HS-0/0	R/W/HS-0/0	R/W/HS-0/0	U-0	U-0	U-0	U-0
IOCBF7	IOCBF6	IOCBF5	IOCBF4	—	—	—	—
bit 7							bit 0

Legend:		
R = Readable bit	W = Writable bit	U = Unimplemented bit, read as ‘0’
u = Bit is unchanged	x = Bit is unknown	-n/n = Value at POR and BOR/Value at all other Resets
‘1’ = Bit is set	‘0’ = Bit is cleared	HS - Bit is set in hardware

bit 7-4 **IOCBF<7:4>:** Interrupt-on-Change PORTB Flag bits
1 = An enabled change was detected on the associated pin.
Set when IOCBPx = 1 and a rising edge was detected on RBx, or when IOCBNx = 1 and a falling edge was detected on RBx.
0 = No change was detected, or the user cleared the detected change.

bit 3-0 **Unimplemented:** Read as ‘0’

Note 1: PIC16(L)F1459 only.

TABLE 13-1: SUMMARY OF REGISTERS ASSOCIATED WITH INTERRUPT-ON-CHANGE

Name	Bit 7	Bit 6	Bit 5	Bit 4	Bit 3	Bit 2	Bit 1	Bit 0	Register on Page
ANSELA(3)	—	—	—	ANSA4	—	—	—	—	133
INTCON	GIE	PEIE	TMR0IE	INTE	IOCIE	TMR0IF	INTF	IOCIF	96
IOCAF	—	—	IOCAF5	IOCAF4	IOCAF3	—	IOCAF1	IOCAF0	146
IOCAN	—	—	IOCAN5	IOCAN4	IOCAN3	—	IOCAN1	IOCAN0	145
IOCAP	—	—	IOCAP5	IOCAP4	IOCAP3	—	IOCAP1	IOCAP0	145
IOCBF(2)	IOCBF7	IOCBF6	IOCBF5	IOCBF4	—	—	—	—	147
IOCBN(2)	IOCBN7	IOCBN6	IOCBN5	IOCBN4	—	—	—	—	147
IOCBP(2)	IOCBP7	IOCBP6	IOCBP5	IOCBP4	—	—	—	—	146
TRISA	—	—	TRISA5	TRISA4	—(1)	—	—(1)	—(1)	132
TRISB(2)	TRISB7	TRISB6	TRISB5	TRISB4	—	—	—	—	136

Legend: — = unimplemented location, read as '0'. Shaded cells are not used by interrupt-on-change.

Note 1: Unimplemented, read as '1'.

2: PIC16(L)F1459 only.

3: PIC16(L)F1455/9 only.

 © 2012 Microchip Technology Inc.

14.0 FIXED VOLTAGE REFERENCE (FVR) (PIC16(L)F1455/9 ONLY)

The Fixed Voltage Reference, or FVR, is a stable voltage reference, independent of VDD, with 1.024V, 2.048V or 4.096V selectable output levels. The output of the FVR can be configured to supply a reference voltage to the following:

- ADC input channel
- ADC positive reference
- DAC input channel
- Comparator positive input
- Comparator negative input

The FVR can be enabled by setting the FVREN bit of the FVRCON register.

14.1 Independent Gain Amplifier

The output of the FVR supplied to the ADC and comparators is routed through a programmable gain amplifier. Each amplifier can be programmed for a gain of 1x, 2x or 4x, to produce the three possible voltage levels.

The ADFVR<1:0> bits of the FVRCON register are used to enable and configure the gain amplifier settings for the reference supplied to the ADC module. Reference **Section 16.0 "Analog-to-Digital Converter (ADC) Module (PIC16(L)F1455/9 only)"** for additional information.

The CDAFVR<1:0> bits of the FVRCON register are used to enable and configure the gain amplifier settings for the reference supplied to the comparator modules. Reference **Section 18.0 "Comparator Module (PIC16(L)F1455/9 only)"** for additional information.

14.2 FVR Stabilization Period

When the Fixed Voltage Reference module is enabled, it requires time for the reference and amplifier circuits to stabilize. Once the circuits stabilize and are ready for use, the FVRRDY bit of the FVRCON register will be set. See **Section 29.0 "Electrical Specifications"** for the minimum delay requirement.

FIGURE 14-1: VOLTAGE REFERENCE BLOCK DIAGRAM

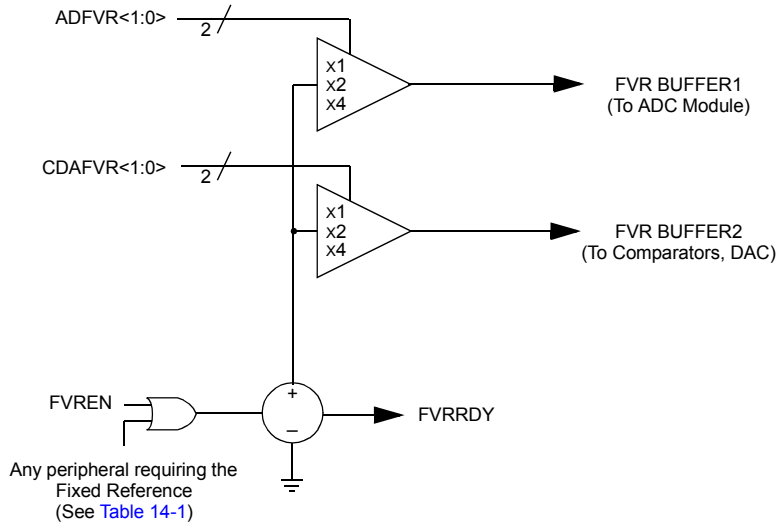

TABLE 14-1: PERIPHERALS REQUIRING THE FIXED VOLTAGE REFERENCE (FVR)

Peripheral	Conditions	Description
HFINTOSC	FOSC<2:0> = 010 and IRCF<3:0> = 000x	INTOSC is active and device is not in Sleep.
BOR	BOREN<1:0> = 11	BOR always enabled.
	BOREN<1:0> = 10 and BORFS = 1	BOR disabled in Sleep mode, BOR Fast Start enabled.
	BOREN<1:0> = 01 and BORFS = 1	BOR under software control, BOR Fast Start enabled.
LDO	All PIC16F1454/5/9 devices, when VREGPM = 1 and not in Sleep	The device runs off of the Low-Power Regulator when in Sleep mode.

14.3 Register Definitions: FVR Control

REGISTER 14-1: FVRCON: FIXED VOLTAGE REFERENCE CONTROL REGISTER

R/W-0/0	R-q/q	R/W-0/0	R/W-0/0	R/W-0/0	R/W-0/0	R/W-0/0	R/W-0/0
FVREN	FVRRDY(1)	TSEN	TSRNG	CDAFVR<1:0>		ADFVR<1:0>	
bit 7							bit 0

Legend:		
R = Readable bit	W = Writable bit	U = Unimplemented bit, read as ‘0’
u = Bit is unchanged	x = Bit is unknown	-n/n = Value at POR and BOR/Value at all other Resets
‘1’ = Bit is set	‘0’ = Bit is cleared	q = Value depends on condition

bit 7 **FVREN:** Fixed Voltage Reference Enable bit
1 = Fixed Voltage Reference is enabled
0 = Fixed Voltage Reference is disabled

bit 6 **FVRRDY:** Fixed Voltage Reference Ready Flag bit(1)
1 = Fixed Voltage Reference output is ready for use
0 = Fixed Voltage Reference output is not ready or not enabled

bit 5 **TSEN:** Temperature Indicator Enable bit(3)
1 = Temperature Indicator is enabled
0 = Temperature Indicator is disabled

bit 4 **TSRNG:** Temperature Indicator Range Selection bit(3)
1 = $V_{OUT} = V_{DD} - 4V_T$ (High Range)
0 = $V_{OUT} = V_{DD} - 2V_T$ (Low Range)

bit 3-2 **CDAFVR<1:0>:** Comparator Fixed Voltage Reference Selection bits
11 = Comparator Fixed Voltage Reference Peripheral output is 4x (4.096V)(2)
10 = Comparator Fixed Voltage Reference Peripheral output is 2x (2.048V)(2)
01 = Comparator Fixed Voltage Reference Peripheral output is 1x (1.024V)
00 = Comparator Fixed Voltage Reference Peripheral output is off

bit 1-0 **ADFVR<1:0>:** ADC Fixed Voltage Reference Selection bit
11 = ADC Fixed Voltage Reference Peripheral output is 4x (4.096V)(2)
10 = ADC Fixed Voltage Reference Peripheral output is 2x (2.048V)(2)
01 = ADC Fixed Voltage Reference Peripheral output is 1x (1.024V)
00 = ADC Fixed Voltage Reference Peripheral output is off

Note 1: FVRRDY is always ‘1’ for the PIC16F1455/9 devices.
2: Fixed Voltage Reference output cannot exceed V_{DD}.
3: See **Section 15.0 “Temperature Indicator Module (PIC16(L)F1455/9 only)”** for additional information.

TABLE 14-2: SUMMARY OF REGISTERS ASSOCIATED WITH THE FIXED VOLTAGE REFERENCE

Name	Bit 7	Bit 6	Bit 5	Bit 4	Bit 3	Bit 2	Bit 1	Bit 0	Register on page
FVRCON	FVREN	FVRRDY	TSEN	TSRNG	CDAFVR>1:0>		ADFVR<1:0>		150

Legend: Shaded cells are unused by the Fixed Voltage Reference module.

 © 2012 Microchip Technology Inc.

15.0 TEMPERATURE INDICATOR MODULE (PIC16(L)F1455/9 ONLY)

This family of devices is equipped with a temperature circuit designed to measure the operating temperature of the silicon die. The circuit's range of operating temperature falls between -40°C and +85°C. The output is a voltage that is proportional to the device temperature. The output of the temperature indicator is internally connected to the device ADC.

The circuit may be used as a temperature threshold detector or a more accurate temperature indicator, depending on the level of calibration performed. A one-point calibration allows the circuit to indicate a temperature closely surrounding that point. A two-point calibration allows the circuit to sense the entire range of temperature more accurately. Reference Application Note AN1333, "*Use and Calibration of the Internal Temperature Indicator*" (DS01333) for more details regarding the calibration process.

15.1 Circuit Operation

Figure 15-1 shows a simplified block diagram of the temperature circuit. The proportional voltage output is achieved by measuring the forward voltage drop across multiple silicon junctions.

Equation 15-1 describes the output characteristics of the temperature indicator.

EQUATION 15-1: VOUT RANGES

High Range: $V_{OUT} = V_{DD} - 4V_T$

Low Range: $V_{OUT} = V_{DD} - 2V_T$

The temperature sense circuit is integrated with the Fixed Voltage Reference (FVR) module. See **Section Register 14-1: "FVRCON: Fixed Voltage Reference Control Register"** for more information.

The circuit is enabled by setting the TSEN bit of the FVRCON register. When disabled, the circuit draws no current.

The circuit operates in either high or low range. The high range, selected by setting the TSRNG bit of the FVRCON register, provides a wider output voltage. This provides more resolution over the temperature range, but may be less consistent from part to part. This range requires a higher bias voltage to operate and thus, a higher VDD is needed.

The low range is selected by clearing the TSRNG bit of the FVRCON register. The low range generates a lower voltage drop and thus, a lower bias voltage is needed to operate the circuit. The low range is provided for low voltage operation.

FIGURE 15-1: TEMPERATURE CIRCUIT DIAGRAM

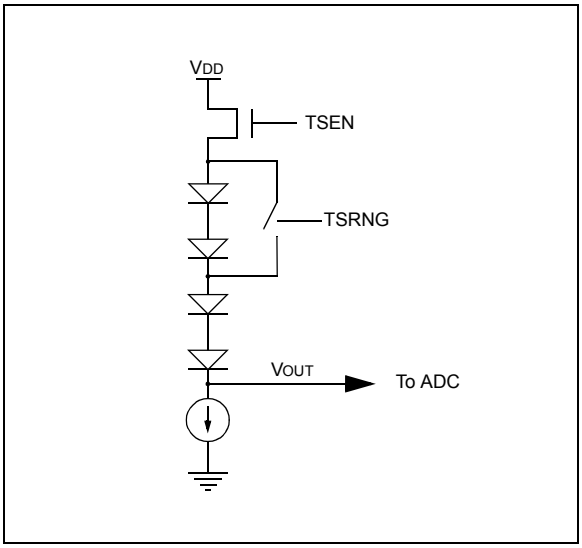

15.2 Minimum Operating VDD

When the temperature circuit is operated in low range, the device may be operated at any operating voltage that is within specifications.

When the temperature circuit is operated in high range, the device operating voltage, VDD, must be high enough to ensure that the temperature circuit is correctly biased.

Table 15-1 shows the recommended minimum VDD vs. range setting.

TABLE 15-1: RECOMMENDED VDD VS. RANGE

Min. VDD, TSRNG = 1	Min. VDD, TSRNG = 0
3.6V	1.8V

15.3 Temperature Output

The output of the circuit is measured using the internal Analog-to-Digital Converter. A channel is reserved for the temperature circuit output. Refer to **Section 16.0 "Analog-to-Digital Converter (ADC) Module (PIC16(L)F1455/9 only)"** for detailed information.

15.4 ADC Acquisition Time

To ensure accurate temperature measurements, the user must wait at least 200 µs after the ADC input multiplexer is connected to the temperature indicator output before the conversion is performed. In addition, the user must wait 200 µs between sequential conversions of the temperature indicator output.

TABLE 15-2: SUMMARY OF REGISTERS ASSOCIATED WITH THE TEMPERATURE INDICATOR

Name	Bit 7	Bit 6	Bit 5	Bit 4	Bit 3	Bit 2	Bit 1	Bit 0	Register on page
FVRCON	FVREN	FVRRDY	TSEN	TSRNG	CDAFVR<1:0>		ADFVR<1:0>		118

Legend: Shaded cells are unused by the temperature indicator module.

 © 2012 Microchip Technology Inc.

16.0 ANALOG-TO-DIGITAL CONVERTER (ADC) MODULE (PIC16(L)F1455/9 ONLY)

The Analog-to-Digital Converter (ADC) allows conversion of an analog input signal to a 10-bit binary representation of that signal. This device uses analog inputs, which are multiplexed into a single sample and hold circuit. The output of the sample and hold is connected to the input of the converter. The converter generates a 10-bit binary result via successive approximation and stores the conversion result into the ADC result registers (ADRESH:ADRESL register pair). Figure 16-1 shows the block diagram of the ADC.

The ADC voltage reference is software selectable to be either internally generated or externally supplied.

The ADC can generate an interrupt upon completion of a conversion. This interrupt can be used to wake-up the device from Sleep.

FIGURE 16-1: ADC BLOCK DIAGRAM

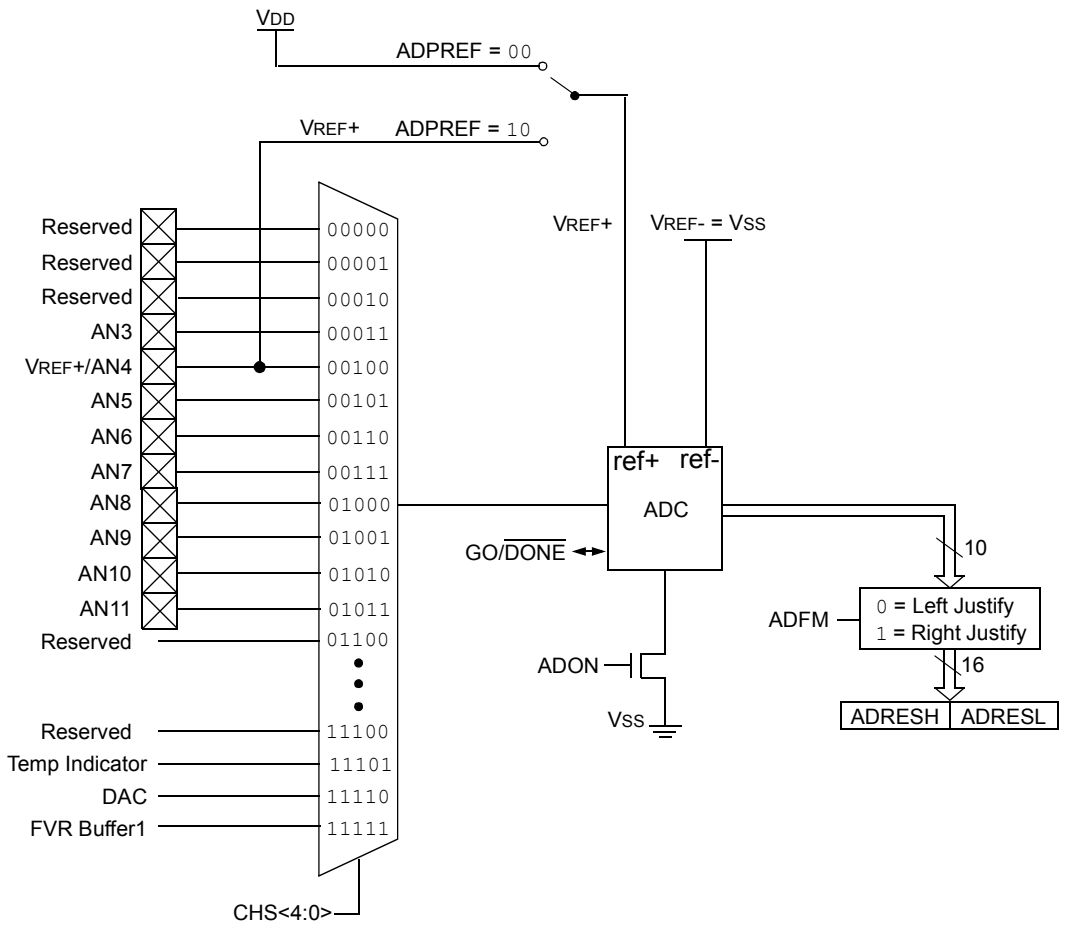

Note 1: When ADON = 0, all multiplexer inputs are disconnected.

 © 2012 Microchip Technology Inc.

16.1 ADC Configuration

When configuring and using the ADC the following functions must be considered:

- Port configuration
- Channel selection
- ADC voltage reference selection
- ADC conversion clock source
- Interrupt control
- Result formatting

16.1.1 PORT CONFIGURATION

The ADC can be used to convert both analog and digital signals. When converting analog signals, the I/O pin should be configured for analog by setting the associated TRIS and ANSEL bits. Refer to **Section 12.0 "I/O Ports"** for more information.

Note:	Analog voltages on any pin that is defined as a digital input may cause the input buffer to conduct excess current.

16.1.2 CHANNEL SELECTION

There are 12 channel selections available:

- AN<11:3> pins
- Temperature Indicator
- DAC
- FVR (Fixed Voltage Reference) Output

Refer to **Section 14.0 "Fixed Voltage Reference (FVR) (PIC16(L)F1455/9 only)"** and **Section 15.0 "Temperature Indicator Module (PIC16(L)F1455/9 only)"** for more information on these channel selections.

The CHS bits of the ADCON0 register determine which channel is connected to the sample and hold circuit.

When changing channels, a delay is required before starting the next conversion. Refer to **Section 16.2 "ADC Operation"** for more information.

16.1.3 ADC VOLTAGE REFERENCE

The ADPREF bits of the ADCON1 register provides control of the positive voltage reference. The positive voltage reference can be:

- V_{REF}+ pin
- V_{DD}

See **Section 14.0 "Fixed Voltage Reference (FVR) (PIC16(L)F1455/9 only)"** for more details on the Fixed Voltage Reference.

16.1.4 CONVERSION CLOCK

The source of the conversion clock is software selectable via the ADCS bits of the ADCON1 register. There are seven possible clock options:

- F_{OSC}/2
- F_{OSC}/4
- F_{OSC}/8
- F_{OSC}/16
- F_{OSC}/32
- F_{OSC}/64
- F_{RC} (dedicated internal oscillator)

The time to complete one bit conversion is defined as T_{AD}. One full 10-bit conversion requires 11.5 T_{AD} periods as shown in Figure 16-2.

For correct conversion, the appropriate T_{AD} specification must be met. Refer to the A/D conversion requirements in **Section 29.0 "Electrical Specifications"** for more information. Table 16-1 gives examples of appropriate ADC clock selections.

Note:	Unless using the F_{RC}, any changes in the system clock frequency will change the ADC clock frequency, which may adversely affect the ADC result.

TABLE 16-1: ADC CLOCK PERIOD (TAD) VS. DEVICE OPERATING FREQUENCIES

ADC Clock Period (TAD)		Device Frequency (FOSC)				
ADC Clock Source	ADCS<2:0>	20 MHz	16 MHz	8 MHz	4 MHz	1 MHz
Fosc/2	000	100 ns(2)	125 ns(2)	250 ns(2)	500 ns(2)	2.0 μs
Fosc/4	100	200 ns(2)	250 ns(2)	500 ns(2)	1.0 μs	4.0 μs
Fosc/8	001	400 ns(2)	0.5 μs(2)	1.0 μs	2.0 μs	8.0 μs(3)
Fosc/16	101	800 ns	1.0 μs	2.0 μs	4.0 μs	16.0 μs(3)
Fosc/32	010	1.6 μs	2.0 μs	4.0 μs	8.0 μs(3)	32.0 μs(3)
Fosc/64	110	3.2 μs	4.0 μs	8.0 μs(3)	16.0 μs(3)	64.0 μs(3)
FRC	x11	1.0-6.0 μs(1,4)	1.0-6.0 μs(1,4)	1.0-6.0 μs(1,4)	1.0-6.0 μs(1,4)	1.0-6.0 μs(1,4)

Legend: Shaded cells are outside of recommended range.

Note 1: The FRC source has a typical TAD time of 1.6 μs for VDD.

2: These values violate the minimum required TAD time.

3: For faster conversion times, the selection of another clock source is recommended.

4: The ADC clock period (TAD) and total ADC conversion time can be minimized when the ADC clock is derived from the system clock FOSC. However, the FRC clock source must be used when conversions are to be performed with the device in Sleep mode.

FIGURE 16-2: ANALOG-TO-DIGITAL CONVERSION TAD CYCLES

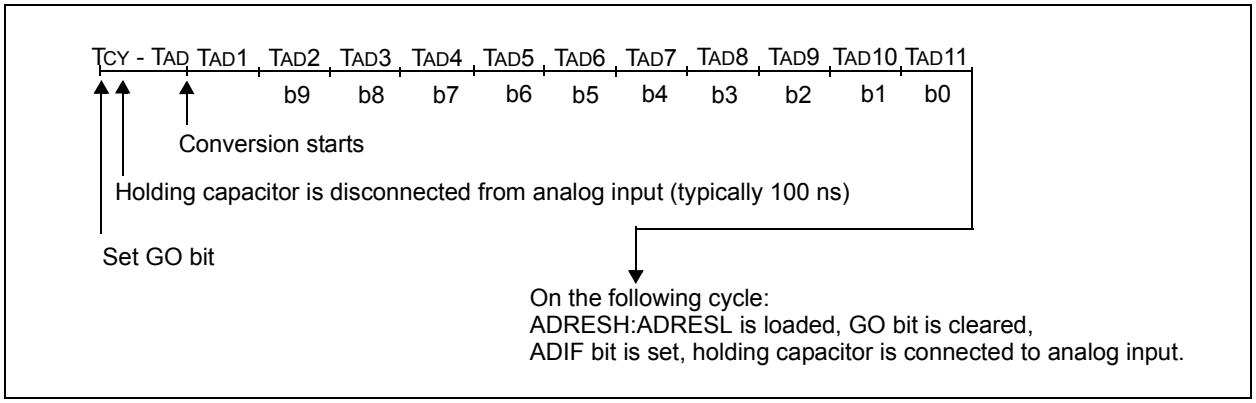

 © 2012 Microchip Technology Inc.

16.1.5 INTERRUPTS

The ADC module allows for the ability to generate an interrupt upon completion of an Analog-to-Digital conversion. The ADC Interrupt Flag is the ADIF bit in the PIR1 register. The ADC Interrupt Enable is the ADIE bit in the PIE1 register. The ADIF bit must be cleared in software.

> **Note 1:** The ADIF bit is set at the completion of every conversion, regardless of whether or not the ADC interrupt is enabled.
>
> **2:** The ADC operates during Sleep only when the FRC oscillator is selected.

This interrupt can be generated while the device is operating or while in Sleep. If the device is in Sleep, the interrupt will wake-up the device. Upon waking from Sleep, the next instruction following the `SLEEP` instruction is always executed. If the user is attempting to wake-up from Sleep and resume in-line code execution, the GIE and PEIE bits of the INTCON register must be disabled. If the GIE and PEIE bits of the INTCON register are enabled, execution will switch to the Interrupt Service Routine.

16.1.6 RESULT FORMATTING

The 10-bit A/D conversion result can be supplied in two formats, left justified or right justified. The ADFM bit of the ADCON1 register controls the output format.

Figure 16-3 shows the two output formats.

FIGURE 16-3: 10-BIT A/D CONVERSION RESULT FORMAT

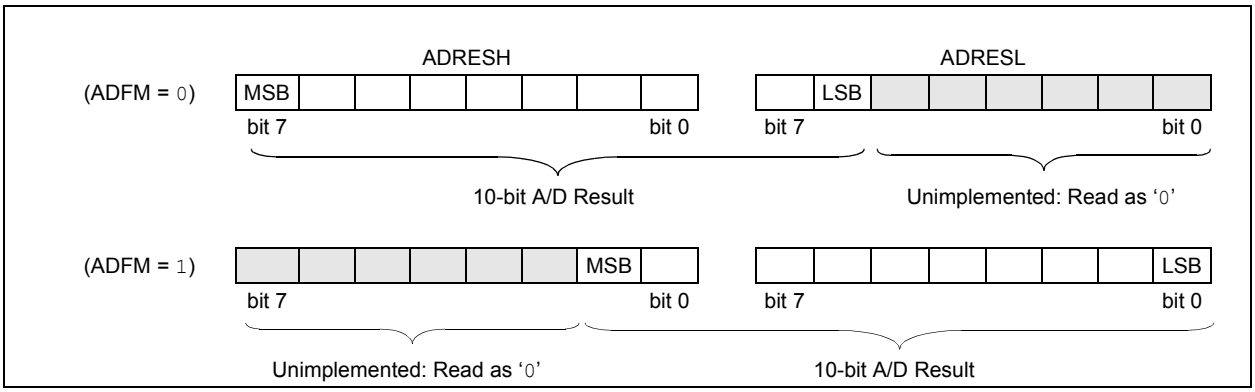

16.2 ADC Operation

16.2.1 STARTING A CONVERSION

To enable the ADC module, the ADON bit of the ADCON0 register must be set to a '1'. Setting the GO/$\overline{\text{DONE}}$ bit of the ADCON0 register to a '1' will start the Analog-to-Digital conversion.

Note:	The GO/$\overline{\text{DONE}}$ bit should not be set in the same instruction that turns on the ADC. Refer to **Section 16.2.6 "A/D Conversion Procedure"**.

16.2.2 COMPLETION OF A CONVERSION

When the conversion is complete, the ADC module will:

- Clear the GO/$\overline{\text{DONE}}$ bit
- Set the ADIF Interrupt Flag bit
- Update the ADRESH and ADRESL registers with new conversion result

16.2.3 TERMINATING A CONVERSION

If a conversion must be terminated before completion, the GO/$\overline{\text{DONE}}$ bit can be cleared in software. The ADRESH and ADRESL registers will be updated with the partially complete Analog-to-Digital conversion sample. Incomplete bits will match the last bit converted.

Note:	A device Reset forces all registers to their Reset state. Thus, the ADC module is turned off and any pending conversion is terminated.

16.2.4 ADC OPERATION DURING SLEEP

The ADC module can operate during Sleep. This requires the ADC clock source to be set to the FRC option. When the FRC clock source is selected, the ADC waits one additional instruction before starting the conversion. This allows the SLEEP instruction to be executed, which can reduce system noise during the conversion. If the ADC interrupt is enabled, the device will wake-up from Sleep when the conversion completes. If the ADC interrupt is disabled, the ADC module is turned off after the conversion completes, although the ADON bit remains set.

When the ADC clock source is something other than FRC, a SLEEP instruction causes the present conversion to be aborted and the ADC module is turned off, although the ADON bit remains set.

16.2.5 AUTO-CONVERSION TRIGGER

The auto-conversion trigger allows periodic ADC measurements without software intervention. When a rising edge of the selected source occurs, the GO/$\overline{\text{DONE}}$ bit is set by hardware.

The auto-conversion trigger source is selected with the TRIGSEL<2:0> bits of the ADCON2 register.

Using the auto-conversion trigger does not assure proper ADC timing. It is the user's responsibility to ensure that the ADC timing requirements are met.

Auto-Conversion sources are:

- TMR0
- TMR1
- TMR2
- C1
- C2

 © 2012 Microchip Technology Inc.

16.2.6 A/D CONVERSION PROCEDURE

This is an example procedure for using the ADC to perform an Analog-to-Digital conversion:

1. Configure Port:
   - Disable pin output driver (Refer to the TRIS register)
   - Configure pin as analog (Refer to the ANSEL register)
2. Configure the ADC module:
   - Select ADC conversion clock
   - Configure voltage reference
   - Select ADC input channel
   - Turn on ADC module
3. Configure ADC interrupt (optional):
   - Clear ADC interrupt flag
   - Enable ADC interrupt
   - Enable peripheral interrupt
   - Enable global interrupt(1)
4. Wait the required acquisition time(2).
5. Start conversion by setting the GO/$\overline{\text{DONE}}$ bit.
6. Wait for ADC conversion to complete by one of the following:
   - Polling the GO/$\overline{\text{DONE}}$ bit
   - Waiting for the ADC interrupt (interrupts enabled)
7. Read ADC Result.
8. Clear the ADC interrupt flag (required if interrupt is enabled).

Note 1: The global interrupt can be disabled if the user is attempting to wake-up from Sleep and resume in-line code execution.

2: Refer to **Section 16.4 "A/D Acquisition Requirements"**.

EXAMPLE 16-1: A/D CONVERSION

```
;This code block configures the ADC
;for polling, Vdd and Vss references, Frc
;clock and AN0 input.
;
;Conversion start & polling for completion
; are included.
;
BANKSEL   ADCON1       ;
MOVLW     B'11110000'  ;Right justify, Frc
                       ;clock
MOVWF     ADCON1       ;Vdd and Vss Vref+
BANKSEL   TRISA        ;
BSF       TRISA,0      ;Set RA0 to input
BANKSEL   ANSEL        ;
BSF       ANSEL,0      ;Set RA0 to analog
BANKSEL   ADCON0       ;
MOVLW     B'00000001'  ;Select channel AN0
MOVWF     ADCON0       ;Turn ADC On
CALL      SampleTime   ;Acquisiton delay
BSF       ADCON0,ADGO  ;Start conversion
BTFSC     ADCON0,ADGO  ;Is conversion done?
GOTO      $-1          ;No, test again
BANKSEL   ADRESH       ;
MOVF      ADRESH,W     ;Read upper 2 bits
MOVWF     RESULTHI     ;store in GPR space
BANKSEL   ADRESL       ;
MOVF      ADRESL,W     ;Read lower 8 bits
MOVWF     RESULTLO     ;Store in GPR space
```

16.3 Register Definitions: ADC Control

REGISTER 16-1: ADCON0: A/D CONTROL REGISTER 0

U-0	R/W-0/0	R/W-0/0	R/W-0/0	R/W-0/0	R/W-0/0	R/W-0/0	R/W-0/0
—	CHS<4:0>					GO/$\overline{\text{DONE}}$	ADON
bit 7							bit 0

Legend:		
R = Readable bit	W = Writable bit	U = Unimplemented bit, read as ‘0’
u = Bit is unchanged	x = Bit is unknown	-n/n = Value at POR and BOR/Value at all other Resets
‘1’ = Bit is set	‘0’ = Bit is cleared	

bit 7 **Unimplemented:** Read as ‘0’

bit 6-2 **CHS<4:0>:** Analog Channel Select bits

00000 = Reserved. No channel connected.
00001 = Reserved. No channel connected.
00010 = Reserved. No channel connected.
00011 = AN3
00100 = AN4
00101 = AN5
00110 = AN6
00111 = AN7
01000 = AN8
01001 = AN9
01010 = AN10
01011 = AN11
01100 = Reserved. No channel connected.
•
•
•
11100 = Reserved. No channel connected.
11101 = Temperature Indicator(1)
11110 = DAC (Digital-to-Analog Converter)(2)
11111 = FVR (Fixed Voltage Reference) Buffer 1 Output(3)

bit 1 **GO/$\overline{\text{DONE}}$:** A/D Conversion Status bit

1 = A/D conversion cycle in progress. Setting this bit starts an A/D conversion cycle.
This bit is automatically cleared by hardware when the A/D conversion has completed.
0 = A/D conversion completed/not in progress

bit 0 **ADON:** ADC Enable bit

1 = ADC is enabled
0 = ADC is disabled and consumes no operating current

Note 1: See **Section 15.0 “Temperature Indicator Module (PIC16(L)F1455/9 only)”** for more information.

2: See **Section 17.0 “Digital-to-Analog Converter (DAC) Module (PIC16(L)F1455/9 only)”** for more information.

3: See **Section 14.0 “Fixed Voltage Reference (FVR) (PIC16(L)F1455/9 only)”** for more information.

 © 2012 Microchip Technology Inc.

REGISTER 16-2: ADCON1: A/D CONTROL REGISTER 1

R/W-0/0	R/W-0/0	R/W-0/0	R/W-0/0	U-0	U-0	R/W-0/0	R/W-0/0
ADFM	ADCS<2:0>			—	—	ADPREF<1:0>	
bit 7							bit 0

Legend:		
R = Readable bit	W = Writable bit	U = Unimplemented bit, read as ‘0’
u = Bit is unchanged	x = Bit is unknown	-n/n = Value at POR and BOR/Value at all other Resets
‘1’ = Bit is set	‘0’ = Bit is cleared	

bit 7 **ADFM:** A/D Result Format Select bit
1 = Right justified. Six Most Significant bits of ADRESH are set to ‘0’ when the conversion result is loaded.
0 = Left justified. Six Least Significant bits of ADRESL are set to ‘0’ when the conversion result is loaded.

bit 6-4 **ADCS<2:0>:** A/D Conversion Clock Select bits
000 = FOSC/2
001 = FOSC/8
010 = FOSC/32
011 = FRC (clock supplied from a dedicated RC oscillator)
100 = FOSC/4
101 = FOSC/16
110 = FOSC/64
111 = FRC (clock supplied from a dedicated RC oscillator)

bit 3-2 **Unimplemented**: Read as ‘0’

bit 1-0 **ADPREF<1:0>:** A/D Positive Voltage Reference Configuration bits
00 = VREF+ is connected to VDD
01 = Reserved
10 = VREF+ is connected to external VREF+ pin(1)
11 = VREF+ is connected to internal Fixed Voltage Reference (FVR) module

Note 1: When selecting the VREF+ pin as the source of the positive reference, be aware that a minimum voltage specification exists. See **Section 29.0 “Electrical Specifications”** for details.

REGISTER 16-3: ADCON2: A/D CONTROL REGISTER 2

R/W-0/0	R/W-0/0	R/W-0/0	R/W-0/0	U-0	U-0	U-0	U-0
—	TRIGSEL<2:0>			—	—	—	—
bit 7							bit 0

Legend:		
R = Readable bit	W = Writable bit	U = Unimplemented bit, read as ‘0’
u = Bit is unchanged	x = Bit is unknown	-n/n = Value at POR and BOR/Value at all other Resets
‘1’ = Bit is set	‘0’ = Bit is cleared	

bit 7 **Unimplemented:** Read as ‘0’

bit 6-4 **TRIGSEL<2:0>:** Auto-Conversion Trigger Selection bits(1)

- 000 = No auto-conversion trigger selected
- 001 = Reserved
- 010 = Reserved
- 011 = TMR0 Overflow(2)
- 100 = TMR1 Overflow(2)
- 101 = TMR2 Match to PR2(2)
- 110 = sync_C1OUT
- 111 = sync_C2OUT

bit 3-0 **Unimplemented:** Read as ‘0’

Note 1: This is a rising edge sensitive input for all sources.

2: Signal also sets its corresponding interrupt flag.

 © 2012 Microchip Technology Inc.

REGISTER 16-4: ADRESH: ADC RESULT REGISTER HIGH (ADRESH) ADFM = 0

R/W-x/u	R/W-x/u	R/W-x/u	R/W-x/u	R/W-x/u	R/W-x/u	R/W-x/u	R/W-x/u
ADRES<9:2>							
bit 7							bit 0

Legend:		
R = Readable bit	W = Writable bit	U = Unimplemented bit, read as ‘0’
u = Bit is unchanged	x = Bit is unknown	-n/n = Value at POR and BOR/Value at all other Resets
‘1’ = Bit is set	‘0’ = Bit is cleared	

bit 7-0 **ADRES<9:2>**: ADC Result Register bits
Upper eight bits of 10-bit conversion result

REGISTER 16-5: ADRESL: ADC RESULT REGISTER LOW (ADRESL) ADFM = 0

R/W-x/u	R/W-x/u	R/W-x/u	R/W-x/u	R/W-x/u	R/W-x/u	R/W-x/u	R/W-x/u
ADRES<1:0>		—	—	—	—	—	—
bit 7							bit 0

Legend:		
R = Readable bit	W = Writable bit	U = Unimplemented bit, read as ‘0’
u = Bit is unchanged	x = Bit is unknown	-n/n = Value at POR and BOR/Value at all other Resets
‘1’ = Bit is set	‘0’ = Bit is cleared	

bit 7-6 **ADRES<1:0>**: ADC Result Register bits
Lower two bits of 10-bit conversion result

bit 5-0 **Reserved**: Do not use.

REGISTER 16-6: ADRESH: ADC RESULT REGISTER HIGH (ADRESH) ADFM = 1

R/W-x/u	R/W-x/u	R/W-x/u	R/W-x/u	R/W-x/u	R/W-x/u	R/W-x/u	R/W-x/u
—	—	—	—	—	—	ADRES<9:8>	
bit 7							bit 0

Legend:		
R = Readable bit	W = Writable bit	U = Unimplemented bit, read as ‘0’
u = Bit is unchanged	x = Bit is unknown	-n/n = Value at POR and BOR/Value at all other Resets
‘1’ = Bit is set	‘0’ = Bit is cleared	

bit 7-2 **Reserved**: Do not use.

bit 1-0 **ADRES<9:8>**: ADC Result Register bits
Upper two bits of 10-bit conversion result

REGISTER 16-7: ADRESL: ADC RESULT REGISTER LOW (ADRESL) ADFM = 1

R/W-x/u	R/W-x/u	R/W-x/u	R/W-x/u	R/W-x/u	R/W-x/u	R/W-x/u	R/W-x/u
ADRES<7:0>							
bit 7							bit 0

Legend:		
R = Readable bit	W = Writable bit	U = Unimplemented bit, read as ‘0’
u = Bit is unchanged	x = Bit is unknown	-n/n = Value at POR and BOR/Value at all other Resets
‘1’ = Bit is set	‘0’ = Bit is cleared	

bit 7-0 **ADRES<7:0>**: ADC Result Register bits
Lower eight bits of 10-bit conversion result

 © 2012 Microchip Technology Inc.

16.4 A/D Acquisition Requirements

For the ADC to meet its specified accuracy, the charge holding capacitor (CHOLD) must be allowed to fully charge to the input channel voltage level. The Analog Input model is shown in Figure 16-4. The source impedance (RS) and the internal sampling switch (RSS) impedance directly affect the time required to charge the capacitor CHOLD. The sampling switch (RSS) impedance varies over the device voltage (VDD), refer to Figure 16-4. **The maximum recommended impedance for analog sources is 10 kΩ.** As the source impedance is decreased, the acquisition time may be decreased. After the analog input channel is selected (or changed), an A/D acquisition must be done before the conversion can be started. To calculate the minimum acquisition time, Equation 16-1 may be used. This equation assumes that 1/2 LSb error is used (1,024 steps for the ADC). The 1/2 LSb error is the maximum error allowed for the ADC to meet its specified resolution.

EQUATION 16-1: ACQUISITION TIME EXAMPLE

Assumptions: *Temperature = 50°C and external impedance of 10kΩ 5.0V VDD*

$$\begin{aligned} T_{ACQ} &= \text{Amplifier Settling Time} + \text{Hold Capacitor Charging Time} + \text{Temperature Coefficient} \\ &= T_{AMP} + T_C + T_{COFF} \\ &= 2\mu s + T_C + [(\text{Temperature} - 25°C)(0.05\mu s/°C)] \end{aligned}$$

The value for TC can be approximated with the following equations:

$$V_{APPLIED}\left(1 - \frac{1}{(2^{n+1}) - 1}\right) = V_{CHOLD}$$ *;[1] VCHOLD charged to within 1/2 lsb*

$$V_{APPLIED}\left(1 - e^{\frac{-T_C}{RC}}\right) = V_{CHOLD}$$ *;[2] VCHOLD charge response to VAPPLIED*

$$V_{APPLIED}\left(1 - e^{\frac{-T_C}{RC}}\right) = V_{APPLIED}\left(1 - \frac{1}{(2^{n+1}) - 1}\right)$$ *;combining [1] and [2]*

Note: Where n = number of bits of the ADC.

Solving for TC:

$$\begin{aligned} T_C &= -C_{HOLD}(R_{IC} + R_{SS} + R_S)\ \ln(1/2047) \\ &= -12.5pF(1k\Omega + 7k\Omega + 10k\Omega)\ \ln(0.0004885) \\ &= 1.12\mu s \end{aligned}$$

Therefore:

$$\begin{aligned} T_{ACQ} &= 5\mu s + 1.12\mu s + [(50°C - 25°C)(0.05\mu s/°C)] \\ &= 7.37\mu s \end{aligned}$$

Note 1: The reference voltage (VREF+) has no effect on the equation, since it cancels itself out.

2: The charge holding capacitor (CHOLD) is not discharged after each conversion.

3: The maximum recommended impedance for analog sources is 10 kΩ. This is required to meet the pin leakage specification.

FIGURE 16-4: ANALOG INPUT MODEL

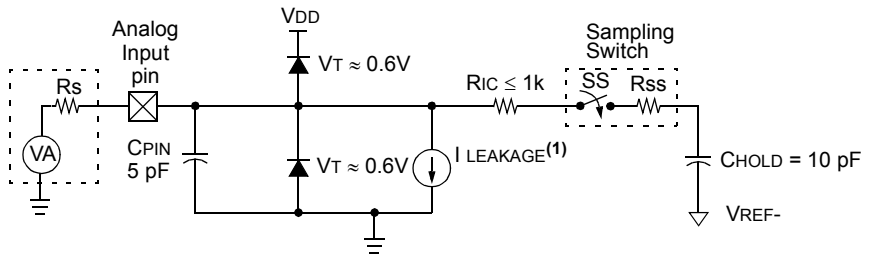

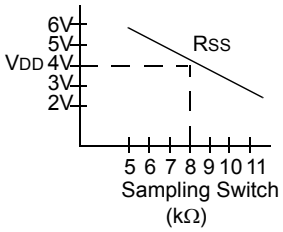

Legend:

CHOLD	= Sample/Hold Capacitance
CPIN	= Input Capacitance
I LEAKAGE	= Leakage current at the pin due to various junctions
RIC	= Interconnect Resistance
RSS	= Resistance of Sampling Switch
SS	= Sampling Switch
VT	= Threshold Voltage

Note 1: Refer to **Section 29.0 "Electrical Specifications"**.

FIGURE 16-5: ADC TRANSFER FUNCTION

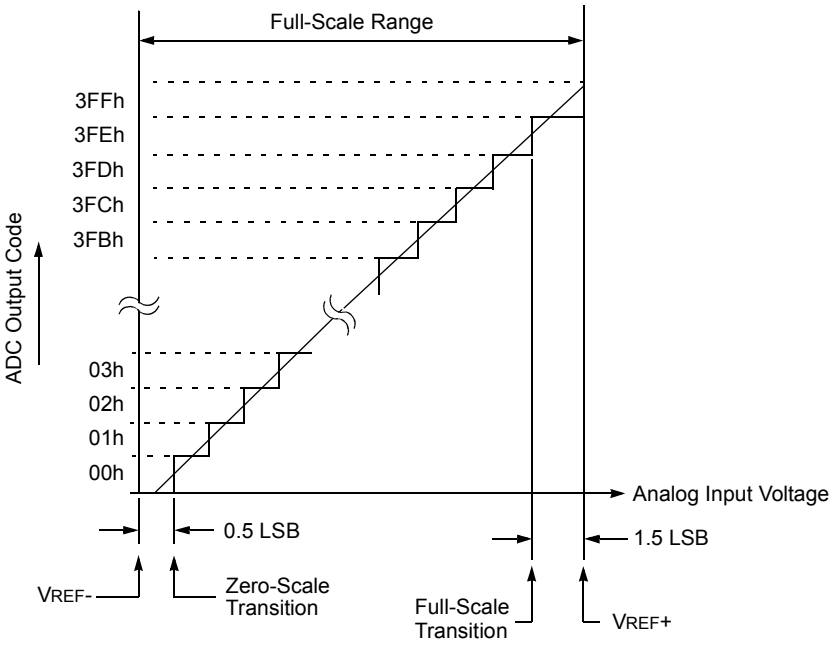

 © 2012 Microchip Technology Inc.

TABLE 16-2: SUMMARY OF REGISTERS ASSOCIATED WITH ADC(3)

Name	Bit 7	Bit 6	Bit 5	Bit 4	Bit 3	Bit 2	Bit 1	Bit 0	Register on Page
ADCON0	—	CHS<4:0>					GO/$\overline{\text{DONE}}$	ADON	160
ADCON1	ADFM	ADCS<2:0>			—	—	ADPREF<1:0>		161
ADCON2	—	TRIGSEL<2:0>			—	—	—	—	162
ADRESH									163, 164
ADRESL	A/D Result Register Low								163, 164
ANSELA(3)	—	—	—	ANSA4	—	—	—	—	133
ANSELB(2)	—	—	ANSB5	ANSB4	—	—	—	—	137
ANSELC(3)	ANSC7(1)	ANSC6(1)	—	—	ANSC3	ANSC2	ANSC1	ANSC0	141
INTCON	GIE	PEIE	TMR0IE	INTE	IOCIE	TMR0IF	INTF	IOCIF	96
PIE1	TMR1GIE	ADIE(3)	RCIE	TXIE	SSP1IE	—	TMR2IE	TMR1IE	97
PIR1	TMR1GIF	ADIF(3)	RCIF	TXIF	SSP1IF	—	TMR2IF	TMR1IF	99
TRISA	—	—	TRISA5	TRISA4	—(1)	—	—(1)	—(1)	132
TRISB(2)	TRISB7	TRISB6	TRISB5	TRISB4	—	—	—	—	136
TRISC	TRISC7(2)	TRISC6(2)	TRISC5	TRISC4	TRISC3	TRISC2	TRISC1	TRISC0	140
FVRCON	FVREN	FVRRDY	TSEN	TSRNG	CDAFVR<1:0>		ADFVR<1:0>		150

Legend: x = unknown, u = unchanged, — = unimplemented read as '0', q = value depends on condition. Shaded cells are not used for ADC module.

Note 1: Unimplemented, read as '1'.

2: PIC16(L)F1459 only.

3: PIC16(L)F1455/9 only.

NOTES:

 © 2012 Microchip Technology Inc.

17.0 DIGITAL-TO-ANALOG CONVERTER (DAC) MODULE (PIC16(L)F1455/9 ONLY)

The Digital-to-Analog Converter supplies a variable voltage reference, ratiometric with the input source, with 32 selectable output levels.

The input of the DAC can be connected to:

- External VREF+ pin
- VDD supply voltage

The output of the DAC can be configured to supply a reference voltage to the following:

- Comparator positive input
- ADC input channel
- DACOUT1 pin
- DACOUT2 pin

The Digital-to-Analog Converter (DAC) can be enabled by setting the DACEN bit of the DACCON0 register.

17.1 Output Voltage Selection

The DAC has 32 voltage level ranges. The 32 levels are set with the DACR<4:0> bits of the DACCON1 register.

The DAC output voltage is determined by the following equations:

EQUATION 17-1: DAC OUTPUT VOLTAGE

IF DACEN = 1

$$V_{OUT} = \left((V_{SOURCE+} - V_{SOURCE-}) \times \frac{DACR[4:0]}{2^5}\right) + V_{SOURCE-}$$

IF DACEN = 0 and DACLPS = 1 and DACR[4:0] = 11111

$$V_{OUT} = V_{SOURCE+}$$

IF DACEN = 0 and DACLPS = 0 and DACR[4:0] = 00000

$$V_{OUT} = V_{SOURCE-}$$

$V_{SOURCE+} = V_{DD}$, V_{REF}, or FVR BUFFER 2

$V_{SOURCE-} = V_{SS}$

17.2 Ratiometric Output Level

The DAC output value is derived using a resistor ladder with each end of the ladder tied to a positive and negative voltage reference input source. If the voltage of either input source fluctuates, a similar fluctuation will result in the DAC output value.

The value of the individual resistors within the ladder can be found in **Section 29.0 "Electrical Specifications"**.

17.3 DAC Voltage Reference Output

The DAC voltage can be output to the DACOUT1 and DACOUT2 pins by setting the respective DACOE1 and DACOE2 pins of the DACCON0 register. Selecting the DAC reference voltage for output on either DACOUTx pin automatically overrides the digital output buffer and digital input threshold detector functions of that pin. Reading the DACOUTx pin when it has been configured for DAC reference voltage output will always return a '0'.

Due to the limited current drive capability, a buffer must be used on the DAC voltage reference output for external connections to either DACOUTx pin. Figure 17-2 shows an example buffering technique.

FIGURE 17-1: DIGITAL-TO-ANALOG CONVERTER BLOCK DIAGRAM

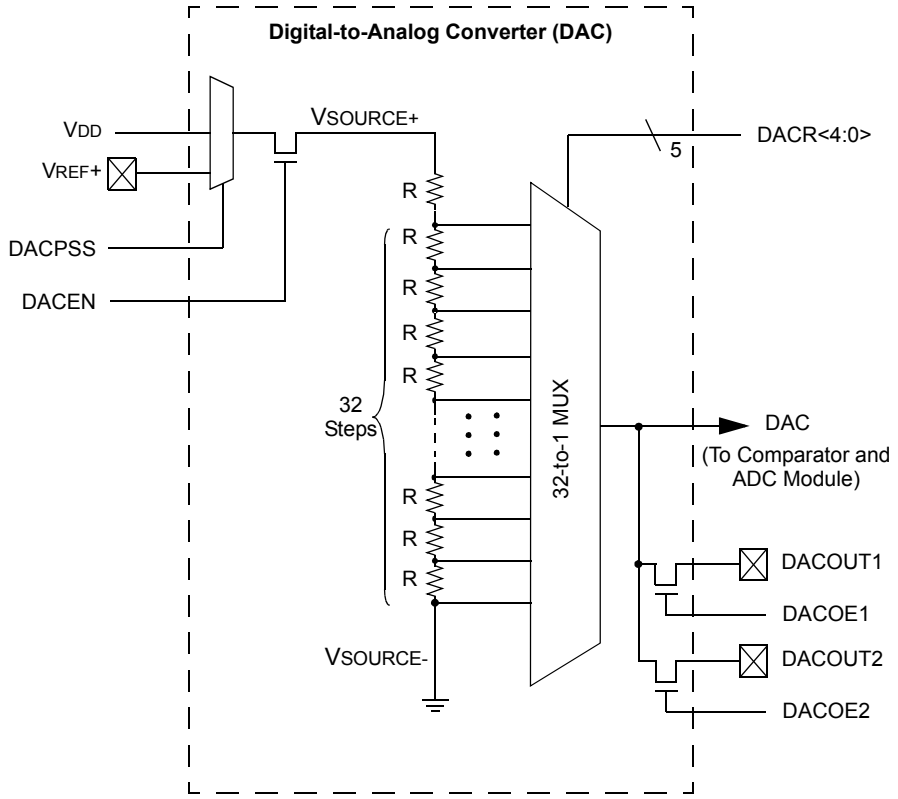

FIGURE 17-2: VOLTAGE REFERENCE OUTPUT BUFFER EXAMPLE

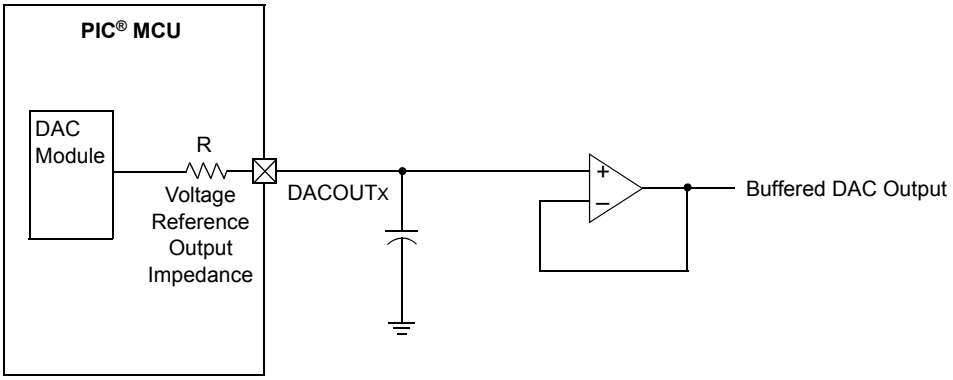

 © 2012 Microchip Technology Inc.

17.4 Operation During Sleep

When the device wakes up from Sleep through an interrupt or a Watchdog Timer time-out, the contents of the DACCON0 register are not affected. To minimize current consumption in Sleep mode, the voltage reference should be disabled.

17.5 Effects of a Reset

A device Reset affects the following:

- DAC is disabled.
- DAC output voltage is removed from the DACOUT pin.
- The DACR<4:0> range select bits are cleared.

17.6 Register Definitions: DAC Control

REGISTER 17-1: DACCON0: VOLTAGE REFERENCE CONTROL REGISTER 0

R/W-0/0	U-0	R/W-0/0	R/W-0/0	R/W-0/0	R/W-0/0	U-0	U-0
DACEN	—	DACOE1	DACOE2	DACPSS<1:0>		—	—
bit 7							bit 0

Legend:		
R = Readable bit	W = Writable bit	U = Unimplemented bit, read as ‘0’
u = Bit is unchanged	x = Bit is unknown	-n/n = Value at POR and BOR/Value at all other Resets
‘1’ = Bit is set	‘0’ = Bit is cleared	

bit 7 **DACEN:** DAC Enable bit
1 = DAC is enabled
0 = DAC is disabled

bit 6 **Unimplemented:** Read as ‘0’

bit 5 **DACOE1:** DAC Voltage Output Enable bit
1 = DAC voltage level is also an output on the DACOUT1 pin
0 = DAC voltage level is disconnected from the DACOUT1 pin

bit 4 **DACOE2:** DAC Voltage Output Enable bit
1 = DAC voltage level is also an output on the DACOUT2 pin
0 = DAC voltage level is disconnected from the DACOUT2 pin

bit 3-2 **DACPSS<1:0>:** DAC Positive Source Select bit
11 = Reserved
10 = Comparator FVR output
01 = V_{REF}+ pin
00 = V_{DD}

bit 1-0 **Unimplemented:** Read as ‘0’

REGISTER 17-2: DACCON1: VOLTAGE REFERENCE CONTROL REGISTER 1

U-0	U-0	U-0	R/W-0/0	R/W-0/0	R/W-0/0	R/W-0/0	R/W-0/0
—	—	—	DACR<4:0>				
bit 7							bit 0

Legend:		
R = Readable bit	W = Writable bit	U = Unimplemented bit, read as ‘0’
u = Bit is unchanged	x = Bit is unknown	-n/n = Value at POR and BOR/Value at all other Resets
‘1’ = Bit is set	‘0’ = Bit is cleared	

bit 7-5 **Unimplemented:** Read as ‘0’

bit 4-0 **DACR<4:0>:** DAC Voltage Output Select bits

TABLE 17-1: SUMMARY OF REGISTERS ASSOCIATED WITH THE DAC MODULE(1)

Name	Bit 7	Bit 6	Bit 5	Bit 4	Bit 3	Bit 2	Bit 1	Bit 0	Register on page
FVRCON	FVREN	FVRRDY	TSEN	TSRNG	CDAFVR<1:0>		ADFVR<1:0>		356
DACCON0	DACEN	—	DACOE1	DACOE2	DACPSS<1:0>		—	—	172
DACCON1	—	—	—	DACR<4:0>					172

Legend: — = Unimplemented location, read as ‘0’. Shaded cells are not used with the DAC module.
Note 1: PIC16(L)F1455/9 only.

 © 2012 Microchip Technology Inc.

18.0 COMPARATOR MODULE (PIC16(L)F1455/9 ONLY)

Comparators are used to interface analog circuits to a digital circuit by comparing two analog voltages and providing a digital indication of their relative magnitudes. Comparators are very useful mixed signal building blocks because they provide analog functionality independent of program execution. The analog comparator module includes the following features:

- Independent comparator control
- Programmable input selection
- Comparator output is available internally/externally
- Programmable output polarity
- Interrupt-on-change
- Wake-up from Sleep
- Programmable Speed/Power optimization
- PWM shutdown
- Programmable and fixed voltage reference

18.1 Comparator Overview

A single comparator is shown in Figure 18-1 along with the relationship between the analog input levels and the digital output. When the analog voltage at VIN+ is less than the analog voltage at VIN-, the output of the comparator is a digital low level. When the analog voltage at VIN+ is greater than the analog voltage at VIN-, the output of the comparator is a digital high level.

The comparators available for this device are located in Table 18-1.

TABLE 18-1: COMPARATOR AVAILABILITY PER DEVICE

Device	C1	C2
PIC16(L)F1455	●	●
PIC16(L)F1459	●	●

FIGURE 18-1: SINGLE COMPARATOR

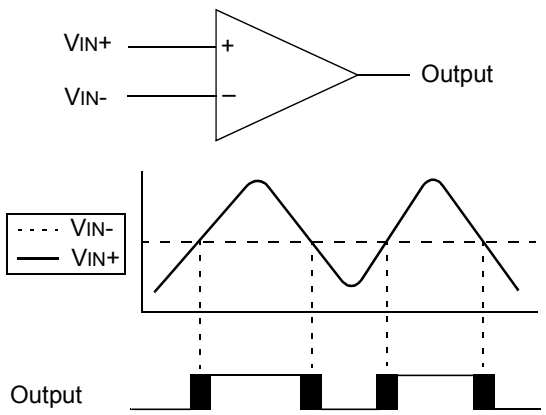

Note: The black areas of the output of the comparator represents the uncertainty due to input offsets and response time.

FIGURE 18-2: COMPARATOR MODULES SIMPLIFIED BLOCK DIAGRAM

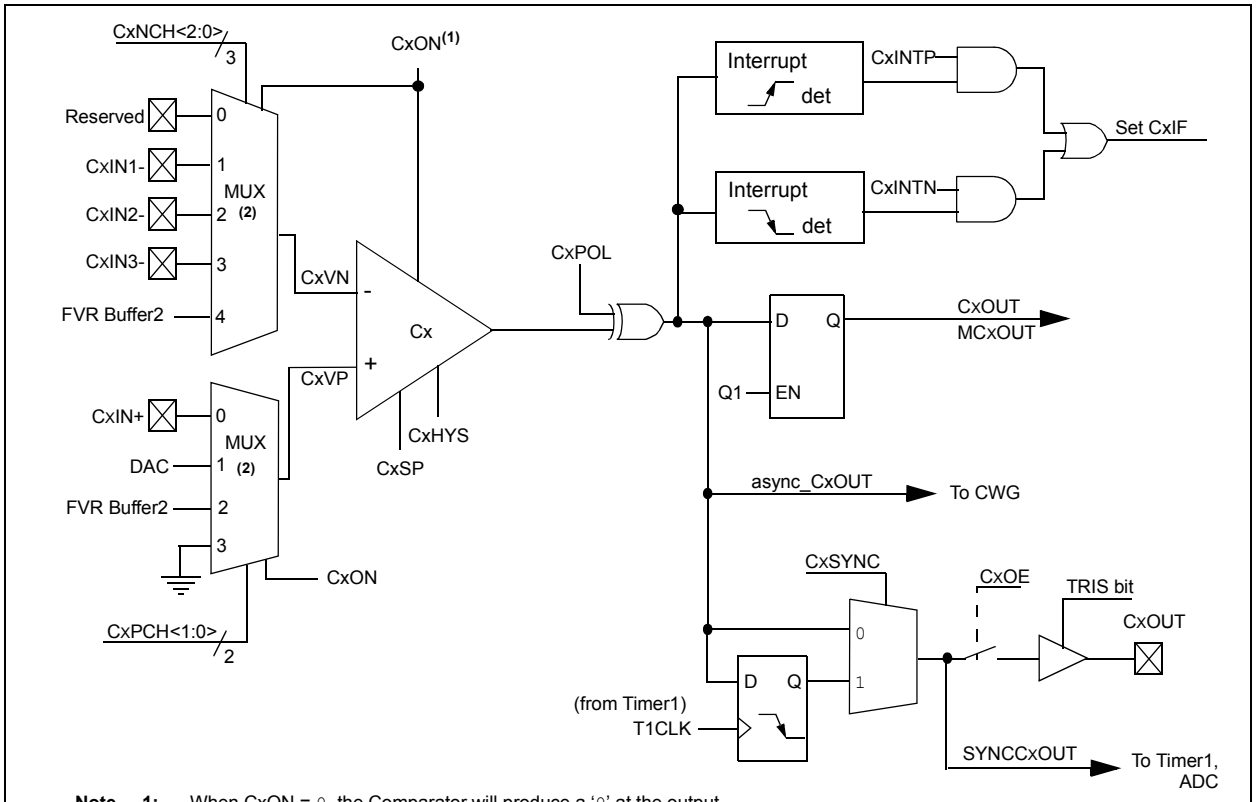

Note 1: When CxON = 0, the Comparator will produce a '0' at the output

2: When CxON = 0, all multiplexer inputs are disconnected.

 © 2012 Microchip Technology Inc.

18.2 Comparator Control

Each comparator has two control registers: CMxCON0 and CMxCON1.

The CMxCON0 registers (see Register 18-1) contain Control and Status bits for the following:

- Enable
- Output selection
- Output polarity
- Speed/Power selection
- Hysteresis enable
- Output synchronization

The CMxCON1 registers (see Register 18-2) contain Control bits for the following:

- Interrupt enable
- Interrupt edge polarity
- Positive input channel selection
- Negative input channel selection

18.2.1 COMPARATOR ENABLE

Setting the CxON bit of the CMxCON0 register enables the comparator for operation. Clearing the CxON bit disables the comparator resulting in minimum current consumption.

18.2.2 COMPARATOR OUTPUT SELECTION

The output of the comparator can be monitored by reading either the CxOUT bit of the CMxCON0 register or the MCxOUT bit of the CMOUT register. In order to make the output available for an external connection, the following conditions must be true:

- CxOE bit of the CMxCON0 register must be set
- Corresponding TRIS bit must be cleared
- CxON bit of the CMxCON0 register must be set

Note 1: The CxOE bit of the CMxCON0 register overrides the PORT data latch. Setting the CxON bit of the CMxCON0 register has no impact on the port override.

2: The internal output of the comparator is latched with each instruction cycle. Unless otherwise specified, external outputs are not latched.

18.2.3 COMPARATOR OUTPUT POLARITY

Inverting the output of the comparator is functionally equivalent to swapping the comparator inputs. The polarity of the comparator output can be inverted by setting the CxPOL bit of the CMxCON0 register. Clearing the CxPOL bit results in a non-inverted output.

Table 18-2 shows the output state versus input conditions, including polarity control.

TABLE 18-2: COMPARATOR OUTPUT STATE VS. INPUT CONDITIONS

Input Condition	CxPOL	CxOUT
CxVN > CxVP	0	0
CxVN < CxVP	0	1
CxVN > CxVP	1	1
CxVN < CxVP	1	0

18.2.4 COMPARATOR SPEED/POWER SELECTION

The trade-off between speed or power can be optimized during program execution with the CxSP control bit. The default state for this bit is '1' which selects the Normal-Speed mode. Device power consumption can be optimized at the cost of slower comparator propagation delay by clearing the CxSP bit to '0'.

18.3 Comparator Hysteresis

A selectable amount of separation voltage can be added to the input pins of each comparator to provide a hysteresis function to the overall operation. Hysteresis is enabled by setting the CxHYS bit of the CMxCON0 register.

See **Section 29.0 "Electrical Specifications"** for more information.

18.4 Timer1 Gate Operation

The output resulting from a comparator operation can be used as a source for gate control of Timer1. See **Section 20.6 "Timer1 Gate"** for more information. This feature is useful for timing the duration or interval of an analog event.

It is recommended that the comparator output be synchronized to Timer1. This ensures that Timer1 does not increment while a change in the comparator is occurring.

18.4.1 COMPARATOR OUTPUT SYNCHRONIZATION

The output from either comparator, C1 or C2, can be synchronized with Timer1 by setting the CxSYNC bit of the CMxCON0 register.

Once enabled, the comparator output is latched on the falling edge of the Timer1 source clock. If a prescaler is used with Timer1, the comparator output is latched after the prescaling function. To prevent a race condition, the comparator output is latched on the falling edge of the Timer1 clock source and Timer1 increments on the rising edge of its clock source. See the Comparator Block Diagram (Figure 18-2) and the Timer1 Block Diagram (Figure 20-1) for more information.

18.5 Comparator Interrupt

An interrupt can be generated upon a change in the output value of the comparator for each comparator, a rising edge detector and a falling edge detector are present.

When either edge detector is triggered and its associated enable bit is set (CxINTP and/or CxINTN bits of the CMxCON1 register), the Corresponding Interrupt Flag bit (CxIF bit of the PIR2 register) will be set.

To enable the interrupt, you must set the following bits:

- CxON, CxPOL and CxSP bits of the CMxCON0 register
- CxIE bit of the PIE2 register
- CxINTP bit of the CMxCON1 register (for a rising edge detection)
- CxINTN bit of the CMxCON1 register (for a falling edge detection)
- PEIE and GIE bits of the INTCON register

The associated interrupt flag bit, CxIF bit of the PIR2 register, must be cleared in software. If another edge is detected while this flag is being cleared, the flag will still be set at the end of the sequence.

Note:	Although a comparator is disabled, an interrupt can be generated by changing the output polarity with the CxPOL bit of the CMxCON0 register, or by switching the comparator on or off with the CxON bit of the CMxCON0 register.

18.6 Comparator Positive Input Selection

Configuring the CxPCH<1:0> bits of the CMxCON1 register directs an internal voltage reference or an analog pin to the non-inverting input of the comparator:

- CxIN+ analog pin
- DAC output
- FVR (Fixed Voltage Reference)
- VSS (Ground)

See **Section 14.0 "Fixed Voltage Reference (FVR) (PIC16(L)F1455/9 only)"** for more information on the Fixed Voltage Reference module.

See **Section 17.0 "Digital-to-Analog Converter (DAC) Module (PIC16(L)F1455/9 only)"** for more information on the DAC input signal.

Any time the comparator is disabled (CxON = 0), all comparator inputs are disabled.

 © 2012 Microchip Technology Inc.

18.7 Comparator Negative Input Selection

The CxNCH<2:0> bits of the CMxCON0 register direct one of the input sources to the comparator inverting input.

Note:	To use CxIN+ and CxINx- pins as analog input, the appropriate bits must be set in the ANSEL register and the corresponding TRIS bits must also be set to disable the output drivers.

18.8 Comparator Response Time

The comparator output is indeterminate for a period of time after the change of an input source or the selection of a new reference voltage. This period is referred to as the response time. The response time of the comparator differs from the settling time of the voltage reference. Therefore, both of these times must be considered when determining the total response time to a comparator input change. See the Comparator and Voltage Reference Specifications in **Section 29.0 "Electrical Specifications"** for more details.

18.9 Interaction with ECCP Logic

The C1 and C2 comparators can be used as general purpose comparators. Their outputs can be brought out to the C1OUT and C2OUT pins. When the ECCP Auto-Shutdown is active it can use one or both comparator signals. If auto-restart is also enabled, the comparators can be configured as a closed loop analog feedback to the ECCP, thereby, creating an analog controlled PWM.

Note:	When the comparator module is first initialized the output state is unknown. Upon initialization, the user should verify the output state of the comparator prior to relying on the result, primarily when using the result in connection with other peripheral features, such as the ECCP Auto-Shutdown mode.

18.10 Analog Input Connection Considerations

A simplified circuit for an analog input is shown in Figure 18-3. Since the analog input pins share their connection with a digital input, they have reverse biased ESD protection diodes to V_{DD} and V_{SS}. The analog input, therefore, must be between V_{SS} and V_{DD}. If the input voltage deviates from this range by more than 0.6V in either direction, one of the diodes is forward biased and a latch-up may occur.

A maximum source impedance of 10 kΩ is recommended for the analog sources. Also, any external component connected to an analog input pin, such as a capacitor or a Zener diode, should have very little leakage current to minimize inaccuracies introduced.

Note 1:	When reading a PORT register, all pins configured as analog inputs will read as a '0'. Pins configured as digital inputs will convert as an analog input, according to the input specification.
2:	Analog levels on any pin defined as a digital input, may cause the input buffer to consume more current than is specified.

FIGURE 18-3: ANALOG INPUT MODEL

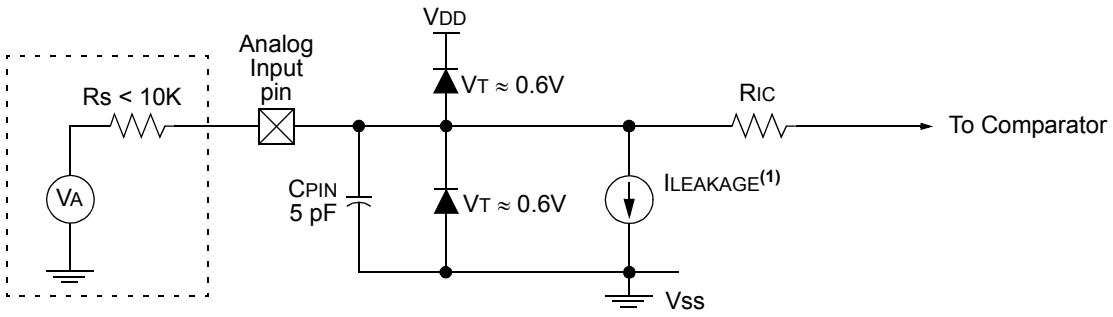

Legend: CPIN = Input Capacitance
ILEAKAGE = Leakage Current at the pin due to various junctions
RIC = Interconnect Resistance
RS = Source Impedance
VA = Analog Voltage
VT = Threshold Voltage

Note 1: See **Section 29.0 "Electrical Specifications"**.

 © 2012 Microchip Technology Inc.

18.11 Register Definitions: Comparator Control

REGISTER 18-1: CMxCON0: COMPARATOR Cx CONTROL REGISTER 0

R/W-0/0	R-0/0	R/W-0/0	R/W-0/0	U-0	R/W-1/1	R/W-0/0	R/W-0/0
CxON	CxOUT	CxOE	CxPOL	—	CxSP	CxHYS	CxSYNC
bit 7							bit 0

Legend:		
R = Readable bit	W = Writable bit	U = Unimplemented bit, read as ‘0’
u = Bit is unchanged	x = Bit is unknown	-n/n = Value at POR and BOR/Value at all other Resets
‘1’ = Bit is set	‘0’ = Bit is cleared	

bit 7 **CxON:** Comparator Enable bit
1 = Comparator is enabled and consumes no active power
0 = Comparator is disabled

bit 6 **CxOUT:** Comparator Output bit
If CxPOL = 1 (inverted polarity):
1 = CxVP < CxVN
0 = CxVP > CxVN
If CxPOL = 0 (non-inverted polarity):
1 = CxVP > CxVN
0 = CxVP < CxVN

bit 5 **CxOE:** Comparator Output Enable bit
1 = CxOUT is present on the CxOUT pin. Requires that the associated TRIS bit be cleared to actually drive the pin. Not affected by CxON.
0 = CxOUT is internal only

bit 4 **CxPOL:** Comparator Output Polarity Select bit
1 = Comparator output is inverted
0 = Comparator output is not inverted

bit 3 **Unimplemented:** Read as ‘0’

bit 2 **CxSP:** Comparator Speed/Power Select bit
1 = Comparator operates in Normal-Power, Higher Speed mode
0 = Comparator operates in Low-Power, Low-Speed mode

bit 1 **CxHYS:** Comparator Hysteresis Enable bit
1 = Comparator hysteresis enabled
0 = Comparator hysteresis disabled

bit 0 **CxSYNC:** Comparator Output Synchronous Mode bit
1 = Comparator output to Timer1 and I/O pin is synchronous to changes on Timer1 clock source. Output updated on the falling edge of Timer1 clock source.
0 = Comparator output to Timer1 and I/O pin is asynchronous

REGISTER 18-2: CMxCON1: COMPARATOR Cx CONTROL REGISTER 1

R/W-0/0	R/W-0/0	R/W-0/0	R/W-0/0	U-0	R/W-0/0	R/W-0/0	R/W-0/0
CxINTP	CxINTN	CxPCH<1:0>		—	CxNCH<2:0>		
bit 7							bit 0

Legend:		
R = Readable bit	W = Writable bit	U = Unimplemented bit, read as ‘0’
u = Bit is unchanged	x = Bit is unknown	-n/n = Value at POR and BOR/Value at all other Resets
‘1’ = Bit is set	‘0’ = Bit is cleared	

bit 7 **CxINTP:** Comparator Interrupt on Positive Going Edge Enable bits
1 = The CxIF interrupt flag will be set upon a positive going edge of the CxOUT bit
0 = No interrupt flag will be set on a positive going edge of the CxOUT bit

bit 6 **CxINTN:** Comparator Interrupt on Negative Going Edge Enable bits
1 = The CxIF interrupt flag will be set upon a negative going edge of the CxOUT bit
0 = No interrupt flag will be set on a negative going edge of the CxOUT bit

bit 5-4 **CxPCH<1:0>:** Comparator Positive Input Channel Select bits
11 = CxVP connects to VSS
10 = CxVP connects to FVR Voltage Reference
01 = CxVP connects to DAC Voltage Reference
00 = CxVP connects to CxIN+ pin

bit 3 **Unimplemented:** Read as ‘0’

bit 2-0 **CxNCH<2:0>:** Comparator Negative Input Channel Select bits
111 = Reserved
110 = Reserved
101 = Reserved
100 = CxVN connects to FVR Voltage reference
011 = CxVN connects to CxIN3- pin
010 = CxVN connects to CxIN2- pin
001 = CxVN connects to CxIN1- pin
000 = Reserved

REGISTER 18-3: CMOUT: COMPARATOR OUTPUT REGISTER

U-0	U-0	U-0	U-0	U-0	U-0	R-0/0	R-0/0
—	—	—	—	—	—	MC2OUT	MC1OUT
bit 7							bit 0

Legend:		
R = Readable bit	W = Writable bit	U = Unimplemented bit, read as ‘0’
u = Bit is unchanged	x = Bit is unknown	-n/n = Value at POR and BOR/Value at all other Resets
‘1’ = Bit is set	‘0’ = Bit is cleared	

bit 7-2 **Unimplemented:** Read as ‘0’

bit 1 **MC2OUT:** Mirror Copy of C2OUT bit

bit 0 **MC1OUT:** Mirror Copy of C1OUT bit

 © 2012 Microchip Technology Inc.

TABLE 18-3: SUMMARY OF REGISTERS ASSOCIATED WITH COMPARATOR MODULE(3)

Name	Bit 7	Bit 6	Bit 5	Bit 4	Bit 3	Bit 2	Bit 1	Bit 0	Register on Page
ANSELA	—	—	—	ANSA4	—	—	—	—	133
ANSELC	ANSC7(2)	ANSC6(2)	—	—	ANSC3	ANSC2	ANSC1	ANSC0	141
CM1CON0	C1ON	C1OUT	C1OE	C1POL	—	C1SP	C1HYS	C1SYNC	179
CM2CON0	C2ON	C2OUT	C2OE	C2POL	—	C2SP	C2HYS	C2SYNC	179
CM1CON1	C1NTP	C1INTN	C1PCH<1:0>		—	C1NCH<2:0>			180
CM2CON1	C2NTP	C2INTN	C2PCH<1:0>		—	C2NCH<2:0>			180
CMOUT	—	—	—	—	—	—	MC2OUT	MC1OUT	180
DACCON0	DACEN	—	DACOE1	DACOE2	DACPSS<1:0>		—	—	172
DACCON1	—	—	—	DACR<4:0>					172
FVRCON	FVREN	FVRRDY	TSEN	TSRNG	CDAFVR<1:0>		ADFVR<1:0>		150
INTCON	GIE	PEIE	TMR0IE	INTE	IOCIE	TMR0IF	INTF	IOCIF	96
PIE2	OSFIE	C2IE	C1IE	—	BCL1IE	USBIE	ACTIE	—	98
PIR2	OSFIF	C2IF	C1IF	—	BCL1IF	USBIF	ACTIF	—	100
PORTA	—	—	RA5	RA4	RA3	—	RA1	RA0	132
PORTC	RC7(2)	RC6(2)	RC5	RC4	RC3	RC2	RC1	RC0	140
LATA	—	—	LATA5	LATA4	—	—	—	—	133
LATC	LATC7(2)	LATC6(2)	LATC5	LATC4	LATC3	LATC2	LATC1	LATC0	141
TRISA	—	—	TRISA5	TRISA4	—(1)	—	—(1)	—(1)	132
TRISC	TRISC7(2)	TRISC6(2)	TRISC5	TRISC4	TRISC3	TRISC2	TRISC1	TRISC0	140

Legend: — = unimplemented location, read as '0'. Shaded cells are unused by the comparator module.

Note 1: Unimplemented, read as '1'.

2: PIC16(L)F1459 only.

3: PIC16(L)F1455/9 only,

NOTES:

 © 2012 Microchip Technology Inc.

19.0 TIMER0 MODULE

The Timer0 module is an 8-bit timer/counter with the following features:

- 8-bit timer/counter register (TMR0)
- 8-bit prescaler (independent of Watchdog Timer)
- Programmable internal or external clock source
- Programmable external clock edge selection
- Interrupt on overflow
- TMR0 can be used to gate Timer1

Figure 19-1 is a block diagram of the Timer0 module.

19.1 Timer0 Operation

The Timer0 module can be used as either an 8-bit timer or an 8-bit counter.

19.1.1 8-BIT TIMER MODE

The Timer0 module will increment every instruction cycle, if used without a prescaler. 8-bit Timer mode is selected by clearing the TMR0CS bit of the OPTION_REG register.

When TMR0 is written, the increment is inhibited for two instruction cycles immediately following the write.

Note:	The value written to the TMR0 register can be adjusted, in order to account for the two instruction cycle delay when TMR0 is written.

19.1.2 8-BIT COUNTER MODE

In 8-Bit Counter mode, the Timer0 module will increment on every rising or falling edge of the T0CKI pin.

8-Bit Counter mode using the T0CKI pin is selected by setting the TMR0CS bit in the OPTION_REG register to '1'.

The rising or falling transition of the incrementing edge for either input source is determined by the TMR0SE bit in the OPTION_REG register.

FIGURE 19-1: BLOCK DIAGRAM OF THE TIMER0

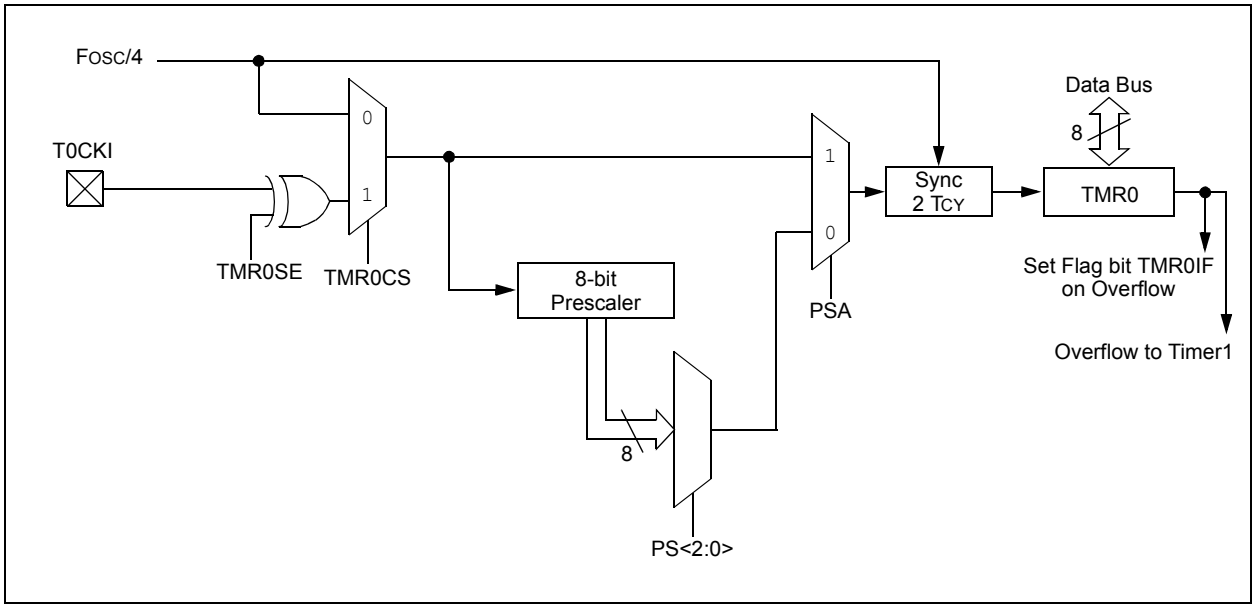

19.1.3 SOFTWARE PROGRAMMABLE PRESCALER

A software programmable prescaler is available for exclusive use with Timer0. The prescaler is enabled by clearing the PSA bit of the OPTION_REG register.

Note:	The Watchdog Timer (WDT) uses its own independent prescaler.

There are eight prescaler options for the Timer0 module ranging from 1:2 to 1:256. The prescale values are selectable via the PS<2:0> bits of the OPTION_REG register. In order to have a 1:1 prescaler value for the Timer0 module, the prescaler must be disabled by setting the PSA bit of the OPTION_REG register.

The prescaler is not readable or writable. All instructions writing to the TMR0 register will clear the prescaler.

19.1.4 TIMER0 INTERRUPT

Timer0 will generate an interrupt when the TMR0 register overflows from FFh to 00h. The TMR0IF interrupt flag bit of the INTCON register is set every time the TMR0 register overflows, regardless of whether or not the Timer0 interrupt is enabled. The TMR0IF bit can only be cleared in software. The Timer0 interrupt enable is the TMR0IE bit of the INTCON register.

Note:	The Timer0 interrupt cannot wake the processor from Sleep since the timer is frozen during Sleep.

19.1.5 8-BIT COUNTER MODE SYNCHRONIZATION

When in 8-Bit Counter mode, the incrementing edge on the T0CKI pin must be synchronized to the instruction clock. Synchronization can be accomplished by sampling the prescaler output on the Q2 and Q4 cycles of the instruction clock. The high and low periods of the external clocking source must meet the timing requirements as shown in **Section 29.0 “Electrical Specifications”**.

19.1.6 OPERATION DURING SLEEP

Timer0 cannot operate while the processor is in Sleep mode. The contents of the TMR0 register will remain unchanged while the processor is in Sleep mode.

 © 2012 Microchip Technology Inc.

19.2 Register Definitions: Option Register

REGISTER 19-1: OPTION_REG: OPTION REGISTER

R/W-1/1	R/W-1/1	R/W-1/1	R/W-1/1	R/W-1/1	R/W-1/1	R/W-1/1	R/W-1/1
$\overline{\text{WPUEN}}$	INTEDG	TMR0CS	TMR0SE	PSA	PS<2:0>		
bit 7							bit 0

Legend:		
R = Readable bit	W = Writable bit	U = Unimplemented bit, read as ‘0’
u = Bit is unchanged	x = Bit is unknown	-n/n = Value at POR and BOR/Value at all other Resets
‘1’ = Bit is set	‘0’ = Bit is cleared	

bit 7 **$\overline{\text{WPUEN}}$:** Weak Pull-Up Enable bit
1 = All weak pull-ups are disabled (except $\overline{\text{MCLR}}$, if it is enabled)
0 = Weak pull-ups are enabled by individual WPUx latch values

bit 6 **INTEDG:** Interrupt Edge Select bit
1 = Interrupt on rising edge of INT pin
0 = Interrupt on falling edge of INT pin

bit 5 **TMR0CS:** Timer0 Clock Source Select bit
1 = Transition on T0CKI pin
0 = Internal instruction cycle clock (FOSC/4)

bit 4 **TMR0SE:** Timer0 Source Edge Select bit
1 = Increment on high-to-low transition on T0CKI pin
0 = Increment on low-to-high transition on T0CKI pin

bit 3 **PSA:** Prescaler Assignment bit
1 = Prescaler is not assigned to the Timer0 module
0 = Prescaler is assigned to the Timer0 module

bit 2-0 **PS<2:0>:** Prescaler Rate Select bits

Bit Value	Timer0 Rate
000	1 : 2
001	1 : 4
010	1 : 8
011	1 : 16
100	1 : 32
101	1 : 64
110	1 : 128
111	1 : 256

TABLE 19-1: SUMMARY OF REGISTERS ASSOCIATED WITH TIMER0

Name	Bit 7	Bit 6	Bit 5	Bit 4	Bit 3	Bit 2	Bit 1	Bit 0	Register on Page
ADCON2(2)	—	TRIGSEL<2:0>			—	—	—	—	162
INTCON	GIE	PEIE	TMR0IE	INTE	IOCIE	TMR0IF	INTF	IOCIF	96
OPTION_REG	$\overline{\text{WPUEN}}$	INTEDG	TMR0CS	TMR0SE	PSA	PS<2:0>			185
TMR0	Holding Register for the 8-bit Timer0 Count								183*
TRISA	—	—	TRISA5	TRISA4	—(1)	—	—(1)	—(1)	132

Legend: — = Unimplemented location, read as ‘0’. Shaded cells are not used by the Timer0 module.
* Page provides register information.
Note 1: Unimplemented, read as ‘1’.
2: PIC16(L)F1455/9 only.

NOTES:

 © 2012 Microchip Technology Inc.

20.0 TIMER1 MODULE WITH GATE CONTROL

The Timer1 module is a 16-bit timer/counter with the following features:

- 16-bit timer/counter register pair (TMR1H:TMR1L)
- Programmable internal or external clock source
- 2-bit prescaler
- Optionally synchronized comparator out
- Multiple Timer1 gate (count enable) sources
- Interrupt on overflow
- Wake-up on overflow (external clock, Asynchronous mode only)
- Auto-conversion Trigger (with CCP)
- Selectable Gate Source Polarity
- Gate Toggle mode
- Gate Single-pulse mode
- Gate Value Status
- Gate Event Interrupt

Figure 20-1 is a block diagram of the Timer1 module.

FIGURE 20-1: TIMER1 BLOCK DIAGRAM

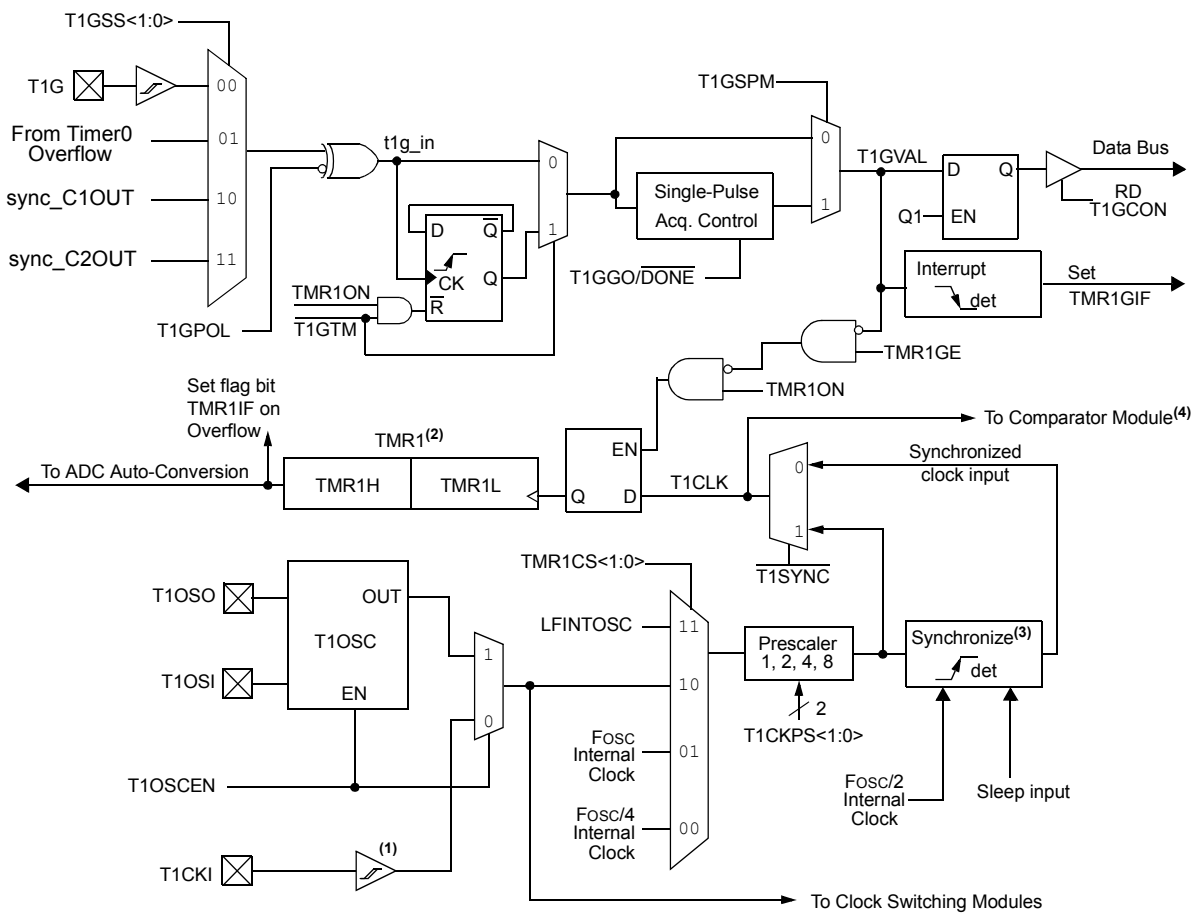

Note 1: ST Buffer is high speed type when using T1CKI.
2: Timer1 register increments on rising edge.
3: Synchronize does not operate while in Sleep.
4: PIC16(L)F1455/9 only.

20.1 Timer1 Operation

The Timer1 module is a 16-bit incrementing counter which is accessed through the TMR1H:TMR1L register pair. Writes to TMR1H or TMR1L directly update the counter.

When used with an internal clock source, the module is a timer and increments on every instruction cycle. When used with an external clock source, the module can be used as either a timer or counter and increments on every selected edge of the external source.

Timer1 is enabled by configuring the TMR1ON and TMR1GE bits in the T1CON and T1GCON registers, respectively. Table 20-1 displays the Timer1 enable selections.

TABLE 20-1: TIMER1 ENABLE SELECTIONS

TMR1ON	TMR1GE	Timer1 Operation
0	0	Off
0	1	Off
1	0	Always On
1	1	Count Enabled

20.2 Clock Source Selection

The TMR1CS<1:0> bits of the T1CON register are used to select the clock source for Timer1. Table 20-2 displays the clock source selections.

20.2.1 INTERNAL CLOCK SOURCE

When the internal clock source is selected, the TMR1H:TMR1L register pair will increment on multiples of FOSC as determined by the Timer1 prescaler.

When the FOSC internal clock source is selected, the Timer1 register value will increment by four counts every instruction clock cycle. Due to this condition, a two LSB error in resolution will occur when reading the Timer1 value. To utilize the full resolution of Timer1, an asynchronous input signal must be used to gate the Timer1 clock input.

The following asynchronous sources may be used:

- Asynchronous event on the T1G pin to Timer1 gate
- C1 or C2 comparator input to Timer1 gate

20.2.2 EXTERNAL CLOCK SOURCE

When the external clock source is selected, the Timer1 module may work as a timer or a counter.

When enabled to count, Timer1 is incremented on the rising edge of the external clock input T1CKI, The external clock source can be synchronized to the microcontroller system clock or it can run asynchronously.

When used as a timer with a clock oscillator, an external 32.768 kHz crystal can be used in conjunction with the dedicated internal oscillator circuit.

Note: In Counter mode, a falling edge must be registered by the counter prior to the first incrementing rising edge after any one or more of the following conditions:

- Timer1 enabled after POR
- Write to TMR1H or TMR1L
- Timer1 is disabled
- Timer1 is disabled (TMR1ON = 0) when T1CKI is high then Timer1 is enabled (TMR1ON=1) when T1CKI is low.

TABLE 20-2: CLOCK SOURCE SELECTIONS

TMR1CS<1:0>	T1OSCEN	Clock Source
11	x	LFINTOSC
10	0	External Clocking on T1CKI Pin
01	x	System Clock (FOSC)
00	x	Instruction Clock (FOSC/4)

 © 2012 Microchip Technology Inc.

20.3 Timer1 Prescaler

Timer1 has four prescaler options allowing 1, 2, 4 or 8 divisions of the clock input. The T1CKPS bits of the T1CON register control the prescale counter. The prescale counter is not directly readable or writable; however, the prescaler counter is cleared upon a write to TMR1H or TMR1L.

20.4 Timer1 Oscillator

A dedicated low-power 32.768 kHz oscillator circuit is built-in between pins T1OSI (input) and T1OSO (amplifier output). This internal circuit is to be used in conjunction with an external 32.768 kHz crystal.

The oscillator circuit is enabled by setting the T1OSCEN bit of the T1CON register. The oscillator will continue to run during Sleep.

Note: The oscillator requires a start-up and stabilization time before use. Thus, T1OSCEN should be set and a suitable delay observed prior to using Timer1. A suitable delay similar to the OST delay can be implemented in software by clearing the TMR1IF bit then presetting the TMR1H:TMR1L register pair to FC00h. The TMR1IF flag will be set when 1024 clock cycles have elapsed, thereby indicating that the oscillator is running and reasonably stable.

20.5 Timer1 Operation in Asynchronous Counter Mode

If the control bit $\overline{\text{T1SYNC}}$ of the T1CON register is set, the external clock input is not synchronized. The timer increments asynchronously to the internal phase clocks. If the external clock source is selected then the timer will continue to run during Sleep and can generate an interrupt on overflow, which will wake-up the processor. However, special precautions in software are needed to read/write the timer (see **Section 20.5.1 "Reading and Writing Timer1 in Asynchronous Counter Mode"**).

Note: When switching from synchronous to asynchronous operation, it is possible to skip an increment. When switching from asynchronous to synchronous operation, it is possible to produce an additional increment.

20.5.1 READING AND WRITING TIMER1 IN ASYNCHRONOUS COUNTER MODE

Reading TMR1H or TMR1L while the timer is running from an external asynchronous clock will ensure a valid read (taken care of in hardware). However, the user should keep in mind that reading the 16-bit timer in two 8-bit values itself, poses certain problems, since the timer may overflow between the reads.

For writes, it is recommended that the user simply stop the timer and write the desired values. A write contention may occur by writing to the timer registers, while the register is incrementing. This may produce an unpredictable value in the TMR1H:TMR1L register pair.

20.6 Timer1 Gate

Timer1 can be configured to count freely or the count can be enabled and disabled using Timer1 gate circuitry. This is also referred to as Timer1 Gate Enable.

Timer1 gate can also be driven by multiple selectable sources.

20.6.1 TIMER1 GATE ENABLE

The Timer1 Gate Enable mode is enabled by setting the TMR1GE bit of the T1GCON register. The polarity of the Timer1 Gate Enable mode is configured using the T1GPOL bit of the T1GCON register.

When Timer1 Gate Enable mode is enabled, Timer1 will increment on the rising edge of the Timer1 clock source. When Timer1 Gate Enable mode is disabled, no incrementing will occur and Timer1 will hold the current count. See Figure 20-4 for timing details.

TABLE 20-3: TIMER1 GATE ENABLE SELECTIONS

T1CLK	T1GPOL	T1G	Timer1 Operation
↑	0	0	Counts
↑	0	1	Holds Count
↑	1	0	Holds Count
↑	1	1	Counts

20.6.2 TIMER1 GATE SOURCE SELECTION

Timer1 gate source selections are shown in Table 20-4. Source selection is controlled by the T1GSS bits of the T1GCON register. The polarity for each available source is also selectable. Polarity selection is controlled by the T1GPOL bit of the T1GCON register.

TABLE 20-4: TIMER1 GATE SOURCES

T1GSS	Timer1 Gate Source
00	Timer1 Gate Pin
01	Overflow of Timer0 (TMR0 increments from FFh to 00h)
10	Comparator 1 Output sync_C1OUT (optionally Timer1 synchronized output)
11	Comparator 2 Output sync_C2OUT (optionally Timer1 synchronized output)

20.6.2.1 T1G Pin Gate Operation

The T1G pin is one source for Timer1 gate control. It can be used to supply an external source to the Timer1 gate circuitry.

20.6.2.2 Timer0 Overflow Gate Operation

When Timer0 increments from FFh to 00h, a low-to-high pulse will automatically be generated and internally supplied to the Timer1 gate circuitry.

20.6.2.3 Comparator C1 Gate Operation

The output resulting from a Comparator 1 operation can be selected as a source for Timer1 gate control. The Comparator 1 output (sync_C1OUT) can be synchronized to the Timer1 clock or left asynchronous. For more information see **Section 18.4.1 “Comparator Output Synchronization”**.

20.6.2.4 Comparator C2 Gate Operation

The output resulting from a Comparator 2 operation can be selected as a source for Timer1 gate control. The Comparator 2 output (sync_C2OUT) can be synchronized to the Timer1 clock or left asynchronous. For more information see **Section 18.4.1 “Comparator Output Synchronization”**

20.6.3 TIMER1 GATE TOGGLE MODE

When Timer1 Gate Toggle mode is enabled, it is possible to measure the full-cycle length of a Timer1 gate signal, as opposed to the duration of a single level pulse.

The Timer1 gate source is routed through a flip-flop that changes state on every incrementing edge of the signal. See Figure 20-4 for timing details.

Timer1 Gate Toggle mode is enabled by setting the T1GTM bit of the T1GCON register. When the T1GTM bit is cleared, the flip-flop is cleared and held clear. This is necessary in order to control which edge is measured.

Note:	Enabling Toggle mode at the same time as changing the gate polarity may result in indeterminate operation.

20.6.4 TIMER1 GATE SINGLE-PULSE MODE

When Timer1 Gate Single-Pulse mode is enabled, it is possible to capture a single-pulse gate event. Timer1 Gate Single-Pulse mode is first enabled by setting the T1GSPM bit in the T1GCON register. Next, the T1GGO/DONE bit in the T1GCON register must be set. The Timer1 will be fully enabled on the next incrementing edge. On the next trailing edge of the pulse, the T1GGO/DONE bit will automatically be cleared. No other gate events will be allowed to increment Timer1 until the T1GGO/DONE bit is once again set in software. See Figure 20-5 for timing details.

If the Single-Pulse Gate mode is disabled by clearing the T1GSPM bit in the T1GCON register, the T1GGO/DONE bit should also be cleared.

Enabling the Toggle mode and the Single-Pulse mode simultaneously will permit both sections to work together. This allows the cycle times on the Timer1 gate source to be measured. See Figure 20-6 for timing details.

20.6.5 TIMER1 GATE VALUE STATUS

When Timer1 Gate Value Status is utilized, it is possible to read the most current level of the gate control value. The value is stored in the T1GVAL bit in the T1GCON register. The T1GVAL bit is valid even when the Timer1 gate is not enabled (TMR1GE bit is cleared).

20.6.6 TIMER1 GATE EVENT INTERRUPT

When Timer1 Gate Event Interrupt is enabled, it is possible to generate an interrupt upon the completion of a gate event. When the falling edge of T1GVAL occurs, the TMR1GIF flag bit in the PIR1 register will be set. If the TMR1GIE bit in the PIE1 register is set, then an interrupt will be recognized.

The TMR1GIF flag bit operates even when the Timer1 gate is not enabled (TMR1GE bit is cleared).

 © 2012 Microchip Technology Inc.

20.7 Timer1 Interrupt

The Timer1 register pair (TMR1H:TMR1L) increments to FFFFh and rolls over to 0000h. When Timer1 rolls over, the Timer1 interrupt flag bit of the PIR1 register is set. To enable the interrupt on rollover, you must set these bits:

- TMR1ON bit of the T1CON register
- TMR1IE bit of the PIE1 register
- PEIE bit of the INTCON register
- GIE bit of the INTCON register

The interrupt is cleared by clearing the TMR1IF bit in the Interrupt Service Routine.

Note:	The TMR1H:TMR1L register pair and the TMR1IF bit should be cleared before enabling interrupts.

20.8 Timer1 Operation During Sleep

Timer1 can only operate during Sleep when setup in Asynchronous Counter mode. In this mode, an external crystal or clock source can be used to increment the counter. To set up the timer to wake the device:

- TMR1ON bit of the T1CON register must be set
- TMR1IE bit of the PIE1 register must be set
- PEIE bit of the INTCON register must be set
- $\overline{\text{T1SYNC}}$ bit of the T1CON register must be set
- TMR1CS bits of the T1CON register must be configured
- T1OSCEN bit of the T1CON register must be configured

The device will wake-up on an overflow and execute the next instructions. If the GIE bit of the INTCON register is set, the device will call the Interrupt Service Routine.

Timer1 oscillator will continue to operate in Sleep regardless of the $\overline{\text{T1SYNC}}$ bit setting.

FIGURE 20-2: TIMER1 INCREMENTING EDGE

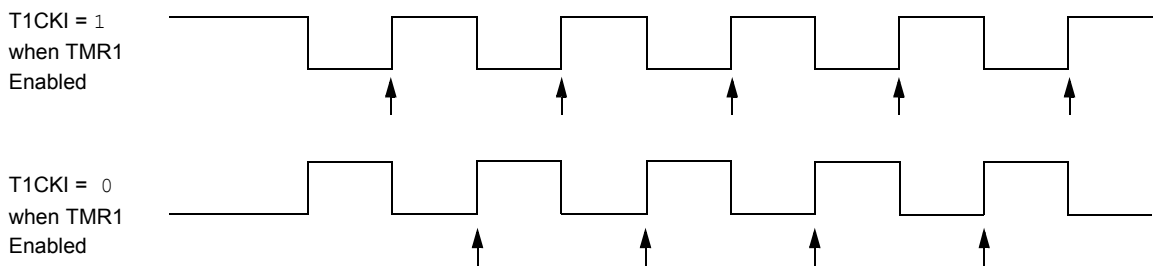

Note 1: Arrows indicate counter increments.

2: In Counter mode, a falling edge must be registered by the counter prior to the first incrementing rising edge of the clock.

FIGURE 20-3: TIMER1 GATE ENABLE MODE

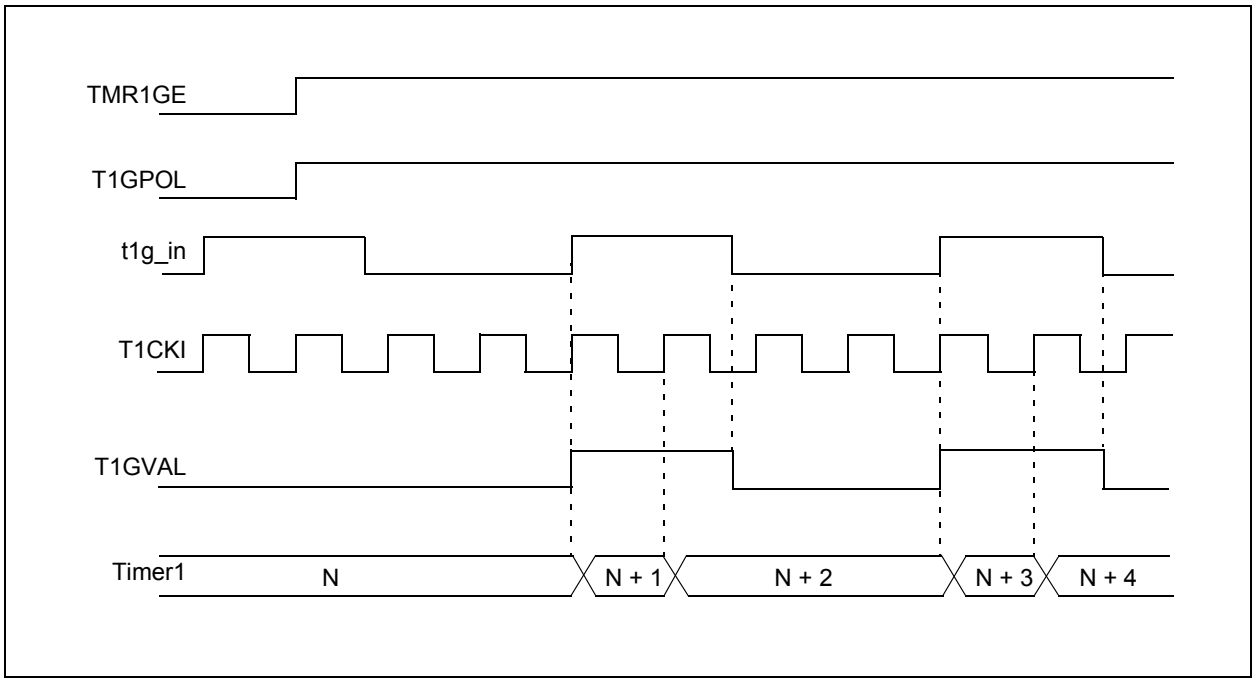

FIGURE 20-4: TIMER1 GATE TOGGLE MODE

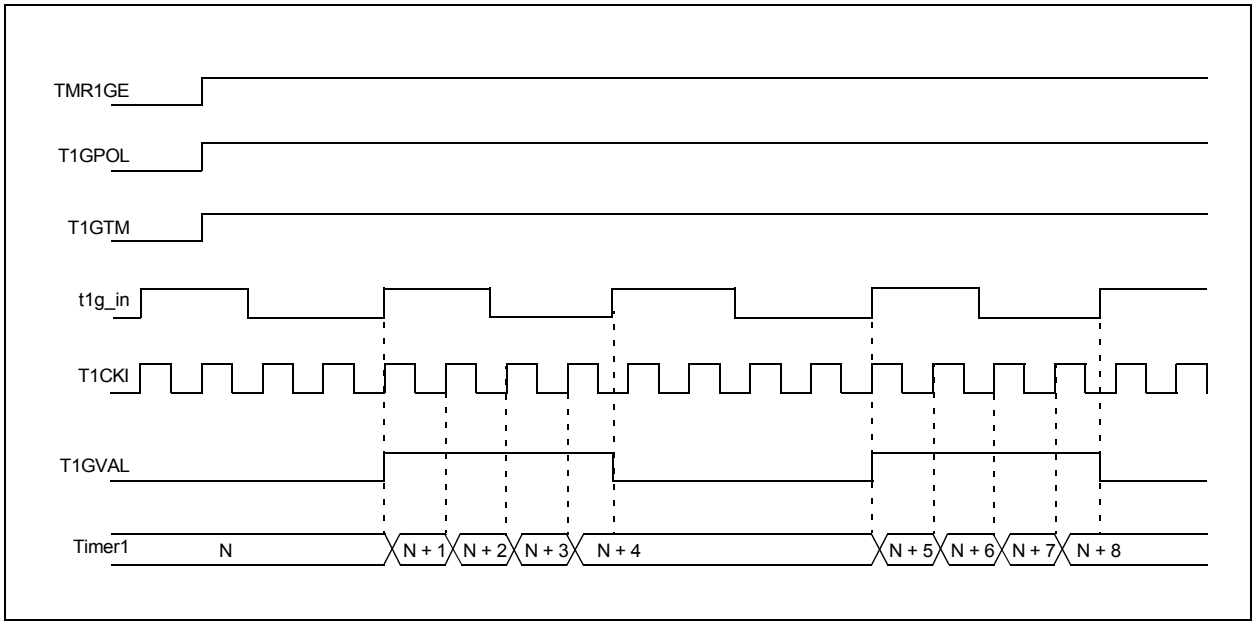

 © 2012 Microchip Technology Inc.

FIGURE 20-5: TIMER1 GATE SINGLE-PULSE MODE

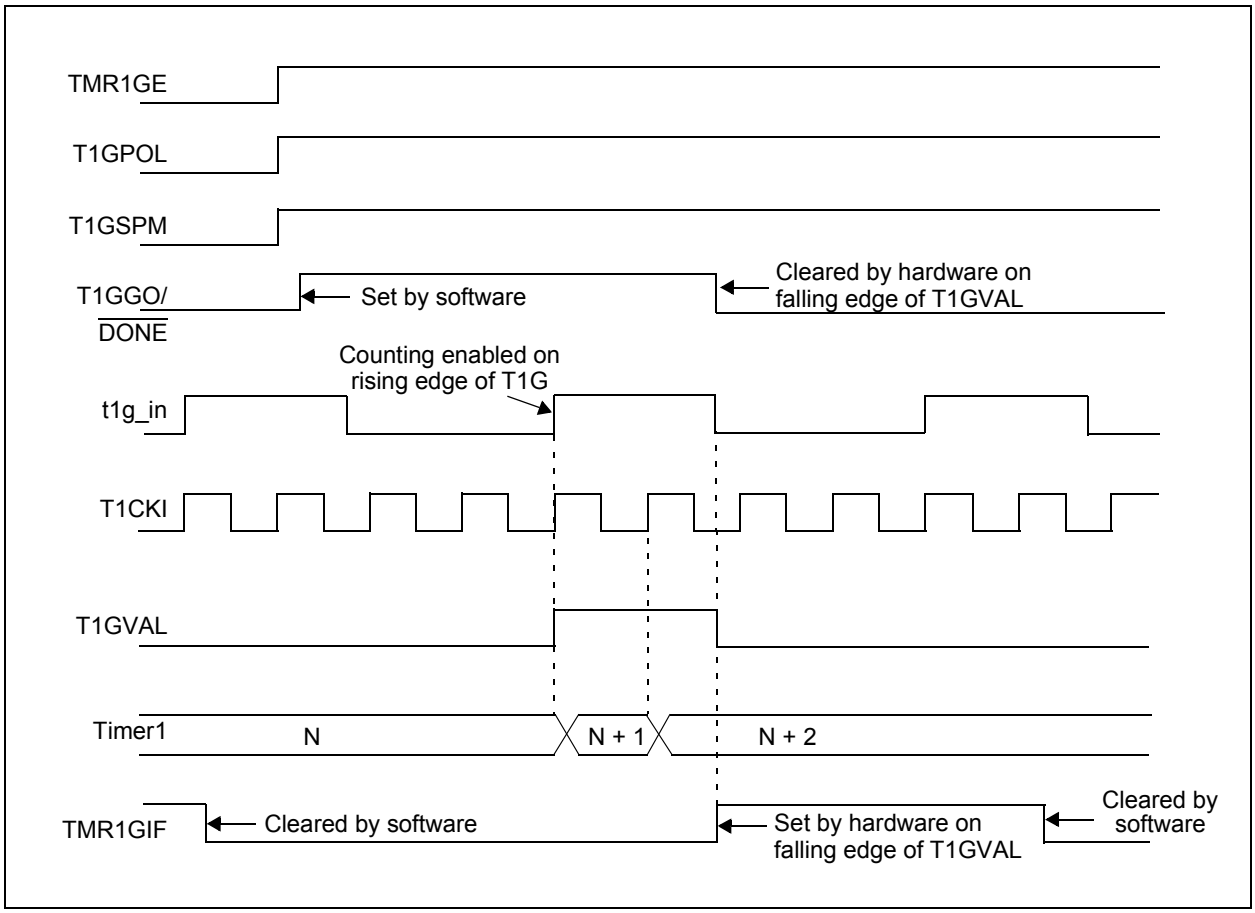

FIGURE 20-6: TIMER1 GATE SINGLE-PULSE AND TOGGLE COMBINED MODE

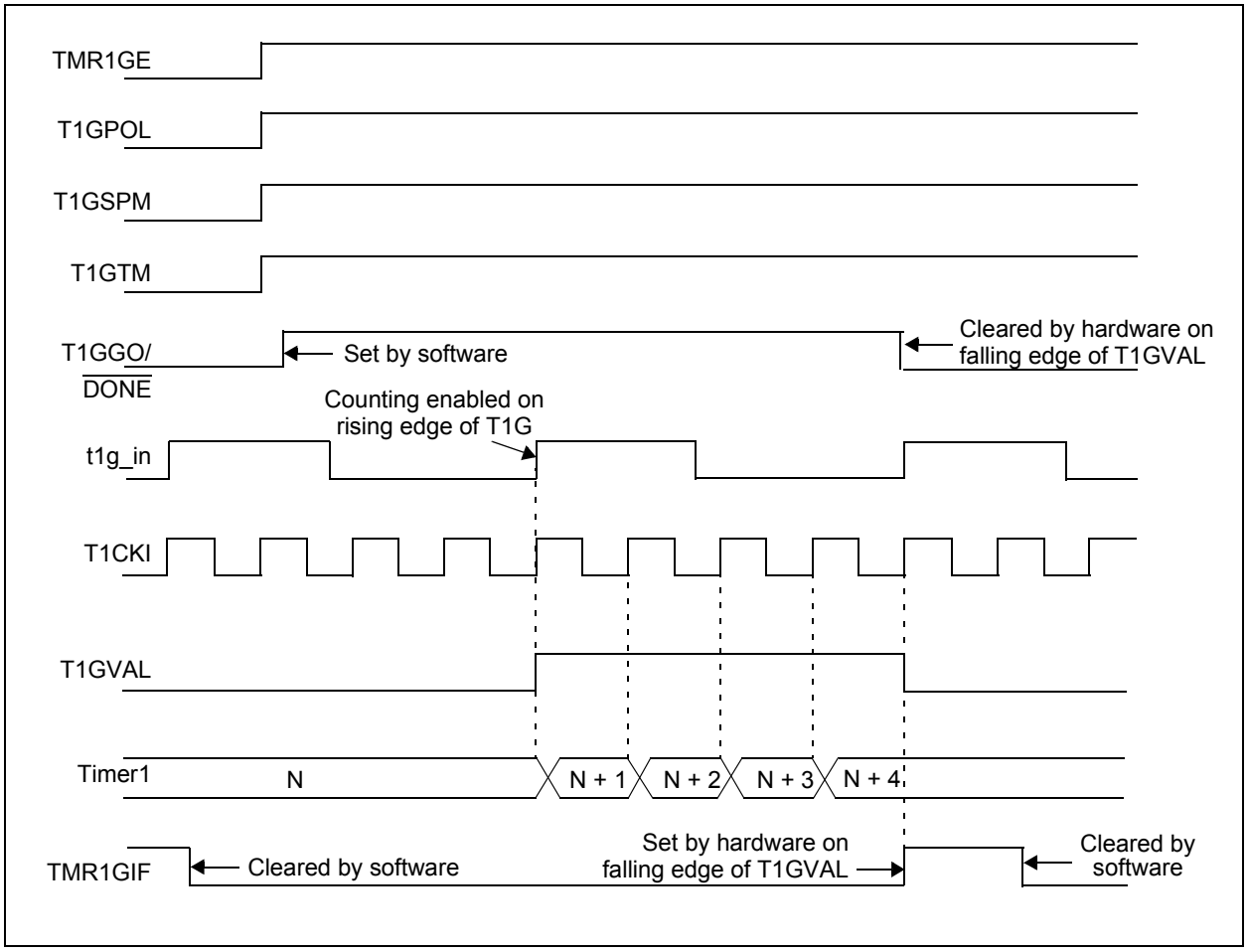

 © 2012 Microchip Technology Inc.

20.9 Register Definitions: Timer1 Control

REGISTER 20-1: T1CON: TIMER1 CONTROL REGISTER

R/W-0/u	R/W-0/u	R/W-0/u	R/W-0/u	R/W-0/u	R/W-0/u	U-0	R/W-0/u
TMR1CS<1:0>		T1CKPS<1:0>		T1OSCEN	$\overline{\text{T1SYNC}}$	—	TMR1ON
bit 7							bit 0

Legend:		
R = Readable bit	W = Writable bit	U = Unimplemented bit, read as ‘0’
u = Bit is unchanged	x = Bit is unknown	-n/n = Value at POR and BOR/Value at all other Resets
‘1’ = Bit is set	‘0’ = Bit is cleared	

bit 7-6 **TMR1CS<1:0>:** Timer1 Clock Source Select bits
- 11 = Timer1 clock source is Capacitive Sensing Oscillator (CAPOSC)
- 10 = Timer1 clock source is pin or oscillator:
  - If T1OSCEN = 0:
  - External clock from T1CKI pin (on the rising edge)
  - If T1OSCEN = 1:
  - Crystal oscillator on T1OSI/T1OSO pins
- 01 = Timer1 clock source is system clock (FOSC)
- 00 = Timer1 clock source is instruction clock (FOSC/4)

bit 5-4 **T1CKPS<1:0>:** Timer1 Input Clock Prescale Select bits
- 11 = 1:8 Prescale value
- 10 = 1:4 Prescale value
- 01 = 1:2 Prescale value
- 00 = 1:1 Prescale value

bit 3 **T1OSCEN:** LP Oscillator Enable Control bit
- 1 = Dedicated Timer1 oscillator circuit enabled
- 0 = Dedicated Timer1 oscillator circuit disabled

bit 2 **$\overline{\text{T1SYNC}}$:** Timer1 Synchronization Control bit
- 1 = Do not synchronize asynchronous clock input
- 0 = Synchronize asynchronous clock input with system clock (FOSC)

bit 1 **Unimplemented:** Read as ‘0’

bit 0 **TMR1ON:** Timer1 On bit
- 1 = Enables Timer1
- 0 = Stops Timer1 and clears Timer1 gate flip-flop

REGISTER 20-2: T1GCON: TIMER1 GATE CONTROL REGISTER

R/W-0/u	R/W-0/u	R/W-0/u	R/W-0/u	R/W/HC-0/u	R-x/x	R/W-0/u	R/W-0/u
TMR1GE	T1GPOL	T1GTM	T1GSPM	T1GGO/$\overline{\text{DONE}}$	T1GVAL	T1GSS<1:0>	
bit 7							bit 0

Legend:		
R = Readable bit	W = Writable bit	U = Unimplemented bit, read as ‘0’
u = Bit is unchanged	x = Bit is unknown	-n/n = Value at POR and BOR/Value at all other Resets
‘1’ = Bit is set	‘0’ = Bit is cleared	HC = Bit is cleared by hardware

bit 7 **TMR1GE:** Timer1 Gate Enable bit

If TMR1ON = 0:
This bit is ignored
If TMR1ON = 1:
1 = Timer1 counting is controlled by the Timer1 gate function
0 = Timer1 counts regardless of Timer1 gate function

bit 6 **T1GPOL:** Timer1 Gate Polarity bit

1 = Timer1 gate is active-high (Timer1 counts when gate is high)
0 = Timer1 gate is active-low (Timer1 counts when gate is low)

bit 5 **T1GTM:** Timer1 Gate Toggle Mode bit

1 = Timer1 Gate Toggle mode is enabled
0 = Timer1 Gate Toggle mode is disabled and toggle flip-flop is cleared
Timer1 gate flip-flop toggles on every rising edge.

bit 4 **T1GSPM:** Timer1 Gate Single-Pulse Mode bit

1 = Timer1 Gate Single-Pulse mode is enabled and is controlling Timer1 gate
0 = Timer1 Gate Single-Pulse mode is disabled

bit 3 **T1GGO/$\overline{\text{DONE}}$:** Timer1 Gate Single-Pulse Acquisition Status bit

1 = Timer1 gate single-pulse acquisition is ready, waiting for an edge
0 = Timer1 gate single-pulse acquisition has completed or has not been started

bit 2 **T1GVAL:** Timer1 Gate Current State bit

Indicates the current state of the Timer1 gate that could be provided to TMR1H:TMR1L.
Unaffected by Timer1 Gate Enable (TMR1GE).

bit 1-0 **T1GSS<1:0>:** Timer1 Gate Source Select bits

11 = Comparator 2 optionally synchronized output (sync_C2OUT)
10 = Comparator 1 optionally synchronized output (sync_C1OUT)
01 = Timer0 overflow output
00 = Timer1 gate pin

 © 2012 Microchip Technology Inc.

TABLE 20-5: SUMMARY OF REGISTERS ASSOCIATED WITH TIMER1

Name	Bit 7	Bit 6	Bit 5	Bit 4	Bit 3	Bit 2	Bit 1	Bit 0	Register on Page
ANSELA(3)	—	—	—	ANSA4	—	—	—	—	133
APFCON	CLKRSEL	SDOSEL(2)	SSSEL	—	T1GSEL	P2SEL(2)	—	—	130
INTCON	GIE	PEIE	TMR0IE	INTE	IOCIE	TMR0IF	INTF	IOCIF	96
PIE1	TMR1GIE	ADIE(3)	RCIE	TXIE	SSP1IE	—	TMR2IE	TMR1IE	97
PIR1	TMR1GIF	ADIF(3)	RCIF	TXIF	SSP1IF	—	TMR2IF	TMR1IF	99
TMR1H	Holding Register for the Most Significant Byte of the 16-bit TMR1 Count								187*
TMR1L	Holding Register for the Least Significant Byte of the 16-bit TMR1 Count								187*
TRISA	—	—	TRISA5	TRISA4	—(1)	—	—(1)	—(1)	132
T1CON	TMR1CS<1:0>		T1CKPS<1:0>		T1OSCEN	$\overline{\text{T1SYNC}}$	—	TMR1ON	195
T1GCON	TMR1GE	T1GPOL	T1GTM	T1GSPM	T1GGO/ $\overline{\text{DONE}}$	T1GVAL	T1GSS<1:0>		196

Legend: — = unimplemented location, read as '0'. Shaded cells are not used by the Timer1 module.
* Page provides register information.

Note 1: Unimplemented, read as '1'.
2: PIC16(L)F1455 only.
3: PIC16(L)F1455/9 only.

NOTES:

 © 2012 Microchip Technology Inc.

21.0 TIMER2 MODULE

The Timer2 module incorporates the following features:

- 8-bit Timer and Period registers (TMR2 and PR2, respectively)
- Readable and writable (both registers)
- Software programmable prescaler (1:1, 1:4, 1:16, and 1:64)
- Software programmable postscaler (1:1 to 1:16)
- Interrupt on TMR2 match with PR2, respectively
- Optional use as the shift clock for the MSSP module (Timer2 only)

See Figure 21-1 for a block diagram of Timer2.

FIGURE 21-1: TIMER2 BLOCK DIAGRAM

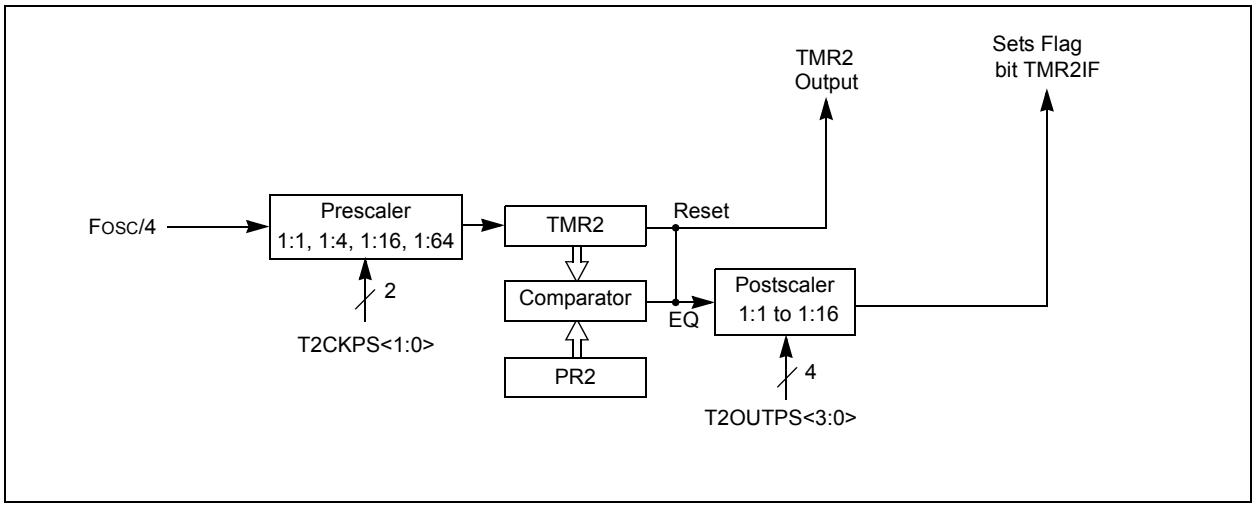

21.1 Timer2 Operation

The clock input to the Timer2 module is the system instruction clock (FOSC/4).

TMR2 increments from 00h on each clock edge.

A 4-bit counter/prescaler on the clock input allows direct input, divide-by-4 and divide-by-16 prescale options. These options are selected by the prescaler control bits, T2CKPS<1:0> of the T2CON register. The value of TMR2 is compared to that of the Period register, PR2, on each clock cycle. When the two values match, the comparator generates a match signal as the timer output. This signal also resets the value of TMR2 to 00h on the next cycle and drives the output counter/postscaler (see **Section 21.2 "Timer2 Interrupt"**).

The TMR2 and PR2 registers are both directly readable and writable. The TMR2 register is cleared on any device Reset, whereas the PR2 register initializes to FFh. Both the prescaler and postscaler counters are cleared on the following events:

- a write to the TMR2 register
- a write to the T2CON register
- Power-on Reset (POR)
- Brown-out Reset (BOR)
- $\overline{\text{MCLR}}$ Reset
- Watchdog Timer (WDT) Reset
- Stack Overflow Reset
- Stack Underflow Reset
- `RESET` Instruction

Note:	TMR2 is not cleared when T2CON is written.

21.2 Timer2 Interrupt

Timer2 can also generate an optional device interrupt. The Timer2 output signal (TMR2-to-PR2 match) provides the input for the 4-bit counter/postscaler. This counter generates the TMR2 match interrupt flag which is latched in TMR2IF of the PIR1 register. The interrupt is enabled by setting the TMR2 Match Interrupt Enable bit, TMR2IE of the PIE1 register.

A range of 16 postscale options (from 1:1 through 1:16 inclusive) can be selected with the postscaler control bits, T2OUTPS<3:0>, of the T2CON register.

21.3 Timer2 Output

The unscaled output of TMR2 is available primarily to the PWM module, where it is used as a time base for operation.

Timer2 can be optionally used as the shift clock source for the MSSP module operating in SPI mode. Additional information is provided in **Section 22.1 "Master SSP (MSSP) Module Overview"**.

21.4 Timer2 Operation During Sleep

Timer2 cannot be operated while the processor is in Sleep mode. The contents of the TMR2 and PR2 registers will remain unchanged while the processor is in Sleep mode.

 © 2012 Microchip Technology Inc.

21.5 Register Definitions: Timer2 Control

REGISTER 21-1: T2CON: TIMER2 CONTROL REGISTER

U-0	R/W-0/0	R/W-0/0	R/W-0/0	R/W-0/0	R/W-0/0	R/W-0/0	R/W-0/0
—	T2OUTPS<3:0>				TMR2ON	T2CKPS<1:0>	
bit 7							bit 0

Legend:		
R = Readable bit	W = Writable bit	U = Unimplemented bit, read as ‘0’
u = Bit is unchanged	x = Bit is unknown	-n/n = Value at POR and BOR/Value at all other Resets
‘1’ = Bit is set	‘0’ = Bit is cleared	

bit 7 **Unimplemented:** Read as ‘0’

bit 6-3 **T2OUTPS<3:0>:** Timer2 Output Postscaler Select bits
1111 = 1:16 Postscaler
1110 = 1:15 Postscaler
1101 = 1:14 Postscaler
1100 = 1:13 Postscaler
1011 = 1:12 Postscaler
1010 = 1:11 Postscaler
1001 = 1:10 Postscaler
1000 = 1:9 Postscaler
0111 = 1:8 Postscaler
0110 = 1:7 Postscaler
0101 = 1:6 Postscaler
0100 = 1:5 Postscaler
0011 = 1:4 Postscaler
0010 = 1:3 Postscaler
0001 = 1:2 Postscaler
0000 = 1:1 Postscaler

bit 2 **TMR2ON:** Timer2 On bit
1 = Timer2 is on
0 = Timer2 is off

bit 1-0 **T2CKPS<1:0>:** Timer2 Clock Prescale Select bits
11 = Prescaler is 64
10 = Prescaler is 16
01 = Prescaler is 4
00 = Prescaler is 1

TABLE 21-1: SUMMARY OF REGISTERS ASSOCIATED WITH TIMER2

Name	Bit 7	Bit 6	Bit 5	Bit 4	Bit 3	Bit 2	Bit 1	Bit 0	Register on Page
INTCON	GIE	PEIE	TMR0IE	INTE	IOCIE	TMR0IF	INTF	IOCIF	96
PIE1	TMR1GIE	ADIE(1)	RCIE	TXIE	SSP1IE	—	TMR2IE	TMR1IE	97
PIR1	TMR1GIF	ADIF(1)	RCIF	TXIF	SSP1IF	—	TMR2IF	TMR1IF	99
PR2	Timer2 Module Period Register								199*
PWM1CON	PWM1EN	PWM1OE	PWM1OUT	PWM1POL	—	—	—	—	291
PWM2CON	PWM2EN	PWM2OE	PWM2OUT	PWM2POL	—	—	—	—	291
T2CON	—	T2OUTPS<3:0>				TMR2ON	T2CKPS<1:0>		201
TMR2	Holding Register for the 8-bit TMR2 Count								199*

Legend: — = unimplemented location, read as '0'. Shaded cells are not used for Timer2 module.
* Page provides register information.

Note 1: PIC16(L)F1455/9 only.

 © 2012 Microchip Technology Inc.

22.0 MASTER SYNCHRONOUS SERIAL PORT (MSSP) MODULE

22.1 Master SSP (MSSP) Module Overview

The Master Synchronous Serial Port (MSSP) module is a serial interface useful for communicating with other peripheral or microcontroller devices. These peripheral devices may be serial EEPROMs, shift registers, display drivers, A/D converters, etc. The MSSPx module can operate in one of two modes:

- Serial Peripheral Interface (SPI)
- Inter-Integrated Circuit (I^2C™)

The SPI interface supports the following modes and features:

- Master mode
- Slave mode
- Clock Parity
- Slave Select Synchronization (Slave mode only)
- Daisy-chain connection of slave devices

Figure 22-1 is a block diagram of the SPI interface module.

FIGURE 22-1: MSSP BLOCK DIAGRAM (SPI MODE)

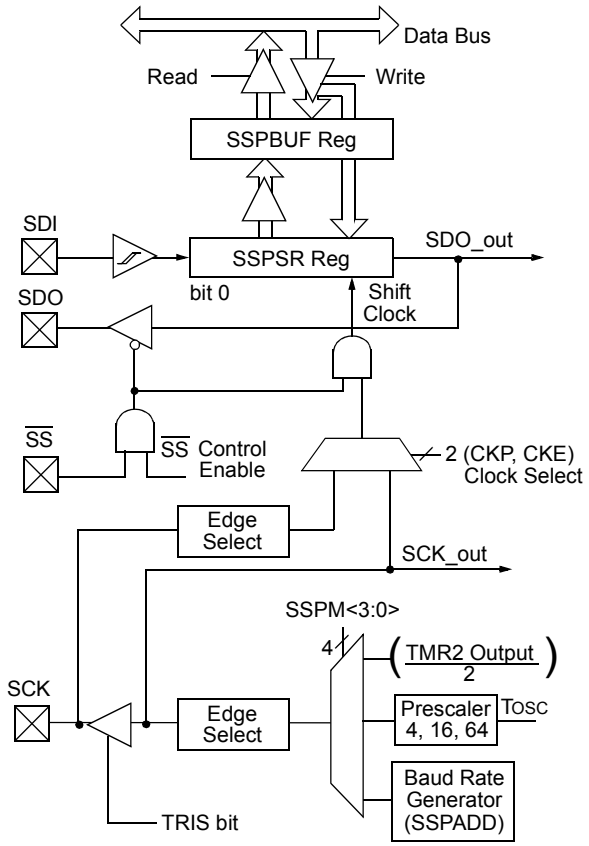

The I²C interface supports the following modes and features:

- Master mode
- Slave mode
- Byte NACKing (Slave mode)
- Limited Multi-master support
- 7-bit and 10-bit addressing
- Start and Stop interrupts
- Interrupt masking
- Clock stretching
- Bus collision detection
- General call address matching
- Address masking
- Address Hold and Data Hold modes
- Selectable SDA hold times

Figure 22-2 is a block diagram of the I²C interface module in Master mode. Figure 22-3 is a diagram of the I²C interface module in Slave mode.

FIGURE 22-2: MSSP BLOCK DIAGRAM (I²C™ MASTER MODE)

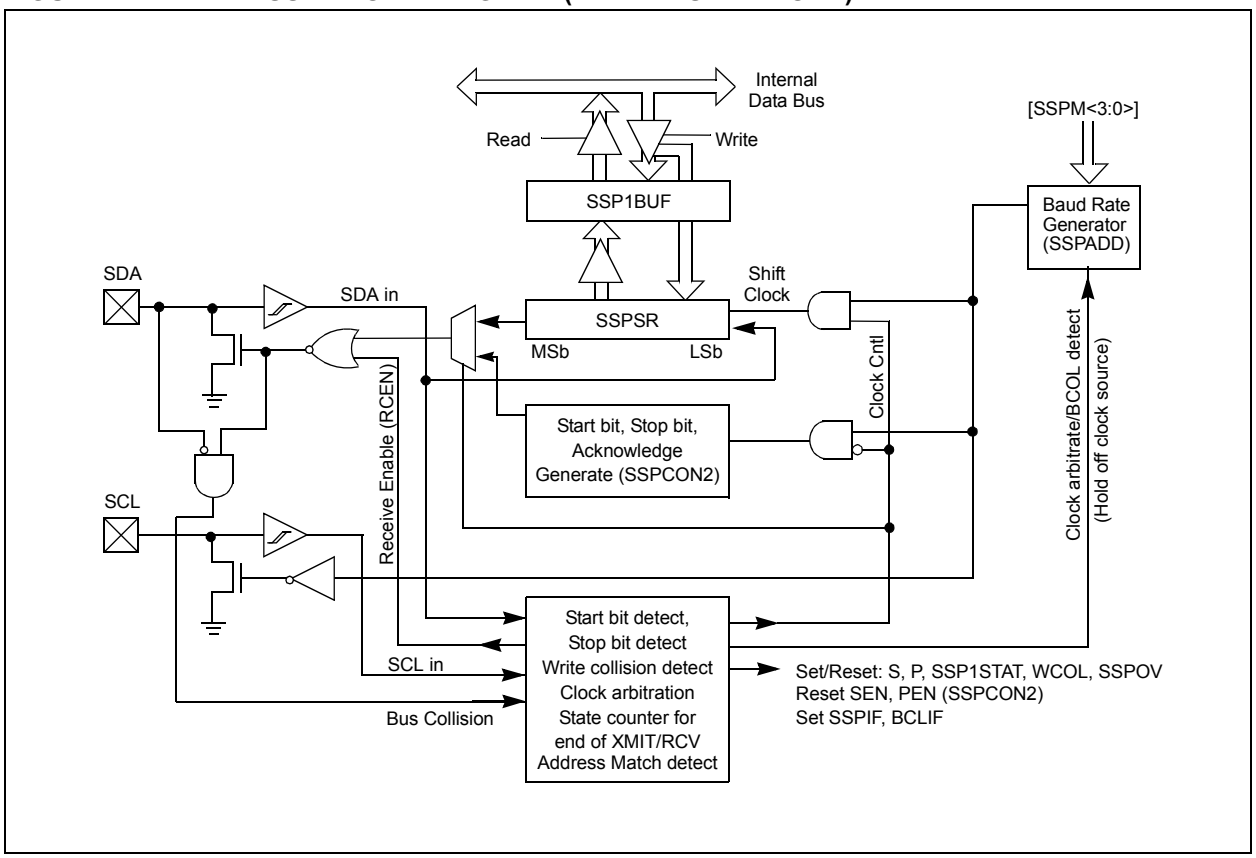

 © 2012 Microchip Technology Inc.

FIGURE 22-3: MSSP BLOCK DIAGRAM (I^2C™ SLAVE MODE)

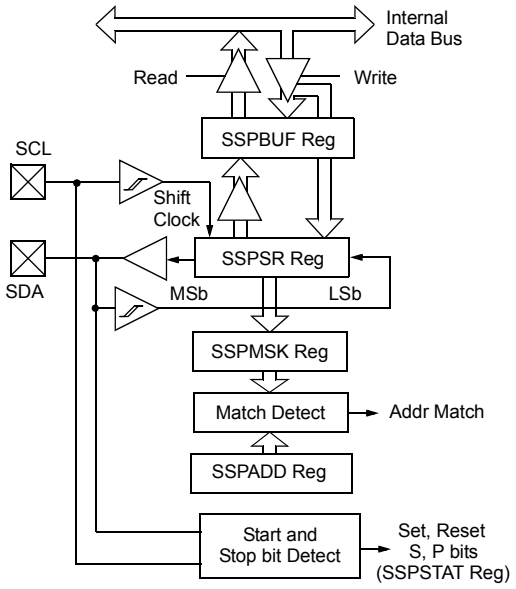

22.2 SPI Mode Overview

The Serial Peripheral Interface (SPI) bus is a synchronous serial data communication bus that operates in Full-Duplex mode. Devices communicate in a master/slave environment where the master device initiates the communication. A slave device is controlled through a Chip Select known as Slave Select.

The SPI bus specifies four signal connections:

- Serial Clock (SCK)
- Serial Data Out (SDO)
- Serial Data In (SDI)
- Slave Select ($\overline{SS}$)

Figure 22-1 shows the block diagram of the MSSP module when operating in SPI mode.

The SPI bus operates with a single master device and one or more slave devices. When multiple slave devices are used, an independent Slave Select connection is required from the master device to each slave device.

Figure 22-4 shows a typical connection between a master device and multiple slave devices.

The master selects only one slave at a time. Most slave devices have tri-state outputs so their output signal appears disconnected from the bus when they are not selected.

Transmissions involve two shift registers, eight bits in size, one in the master and one in the slave. With either the master or the slave device, data is always shifted out one bit at a time, with the Most Significant bit (MSb) shifted out first. At the same time, a new Least Significant bit (LSb) is shifted into the same register.

Figure 22-5 shows a typical connection between two processors configured as master and slave devices.

Data is shifted out of both shift registers on the programmed clock edge and latched on the opposite edge of the clock.

The master device transmits information out on its SDO output pin which is connected to, and received by, the slave's SDI input pin. The slave device transmits information out on its SDO output pin, which is connected to, and received by, the master's SDI input pin.

To begin communication, the master device first sends out the clock signal. Both the master and the slave devices should be configured for the same clock polarity.

The master device starts a transmission by sending out the MSb from its shift register. The slave device reads this bit from that same line and saves it into the LSb position of its shift register.

During each SPI clock cycle, a full-duplex data transmission occurs. This means that while the master device is sending out the MSb from its shift register (on its SDO pin) and the slave device is reading this bit and saving it as the LSb of its shift register, that the slave device is also sending out the MSb from its shift register (on its SDO pin) and the master device is reading this bit and saving it as the LSb of its shift register.

After eight bits have been shifted out, the master and slave have exchanged register values.

If there is more data to exchange, the shift registers are loaded with new data and the process repeats itself.

Whether the data is meaningful or not (dummy data), depends on the application software. This leads to three scenarios for data transmission:

- Master sends useful data and slave sends dummy data.
- Master sends useful data and slave sends useful data.
- Master sends dummy data and slave sends useful data.

Transmissions may involve any number of clock cycles. When there is no more data to be transmitted, the master stops sending the clock signal and it deselects the slave.

Every slave device connected to the bus that has not been selected through its slave select line must disregard the clock and transmission signals and must not transmit out any data of its own.

 © 2012 Microchip Technology Inc.

FIGURE 22-4: SPI MASTER AND MULTIPLE SLAVE CONNECTION

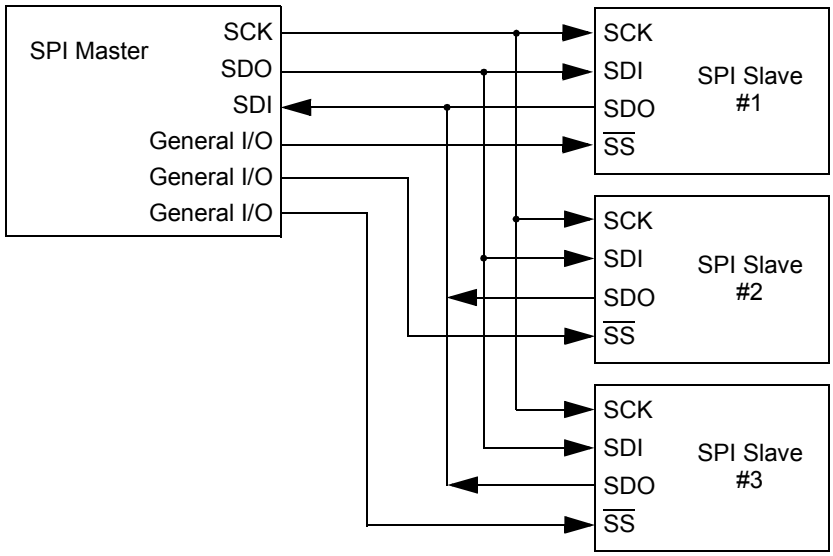

22.2.1 SPI MODE REGISTERS

The MSSP module has five registers for SPI mode operation. These are:

- MSSP STATUS register (SSPSTAT)
- MSSP Control Register 1 (SSPCON1)
- MSSP Control Register 3 (SSPCON3)
- MSSP Data Buffer register (SSPBUF)
- MSSP Address register (SSPADD)
- MSSP Shift register (SSPSR)
  (Not directly accessible)

SSPCON1 and SSPSTAT are the control and STATUS registers in SPI mode operation. The SSPCON1 register is readable and writable. The lower six bits of the SSPSTAT are read-only. The upper two bits of the SSPSTAT are read/write.

In one SPI master mode, SSPADD can be loaded with a value used in the Baud Rate Generator. More information on the Baud Rate Generator is available in **Section 22.7 “Baud Rate Generator”**.

SSPSR is the shift register used for shifting data in and out. SSPBUF provides indirect access to the SSPSR register. SSPBUF is the buffer register to which data bytes are written, and from which data bytes are read.

In receive operations, SSPSR and SSPBUF together create a buffered receiver. When SSPSR receives a complete byte, it is transferred to SSPBUF and the SSPIF interrupt is set.

During transmission, the SSPBUF is not buffered. A write to SSPBUF will write to both SSPBUF and SSPSR.

22.2.2 SPI MODE OPERATION

When initializing the SPI, several options need to be specified. This is done by programming the appropriate control bits (SSPCON1<5:0> and SSPSTAT<7:6>). These control bits allow the following to be specified:

- Master mode (SCK is the clock output)
- Slave mode (SCK is the clock input)
- Clock Polarity (Idle state of SCK)
- Data Input Sample Phase (middle or end of data output time)
- Clock Edge (output data on rising/falling edge of SCK)
- Clock Rate (Master mode only)
- Slave Select mode (Slave mode only)

To enable the serial port, SSP Enable bit, SSPEN of the SSPCON1 register, must be set. To reset or reconfigure SPI mode, clear the SSPEN bit, re-initialize the SSPCONx registers and then set the SSPEN bit. This configures the SDI, SDO, SCK and $\overline{SS}$ pins as serial port pins. For the pins to behave as the serial port function, some must have their data direction bits (in the TRIS register) appropriately programmed as follows:

- SDI must have corresponding TRIS bit set
- SDO must have corresponding TRIS bit cleared
- SCK (Master mode) must have corresponding TRIS bit cleared
- SCK (Slave mode) must have corresponding TRIS bit set
- $\overline{SS}$ must have corresponding TRIS bit set

Any serial port function that is not desired may be overridden by programming the corresponding data direction (TRIS) register to the opposite value.

The MSSP consists of a transmit/receive shift register (SSPSR) and a buffer register (SSPBUF). The SSPSR shifts the data in and out of the device, MSb first. The SSPBUF holds the data that was written to the SSPSR until the received data is ready. Once the eight bits of data have been received, that byte is moved to the SSPBUF register. Then, the Buffer Full Detect bit, BF of the SSPSTAT register, and the interrupt flag bit, SSPIF, are set. This double-buffering of the received data (SSPBUF) allows the next byte to start reception before reading the data that was just received. Any write to the SSPBUF register during transmission/reception of data will be ignored and the write collision detect bit WCOL of the SSPCON1 register, will be set. User software must clear the WCOL bit to allow the following write(s) to the SSPBUF register to complete successfully.

When the application software is expecting to receive valid data, the SSPBUF should be read before the next byte of data to transfer is written to the SSPBUF. The Buffer Full bit, BF of the SSPSTAT register, indicates when SSPBUF has been loaded with the received data (transmission is complete). When the SSPBUF is read, the BF bit is cleared. This data may be irrelevant if the SPI is only a transmitter. Generally, the MSSP interrupt is used to determine when the transmission/reception has completed. If the interrupt method is not going to be used, then software polling can be done to ensure that a write collision does not occur.

The SSPSR is not directly readable or writable and can only be accessed by addressing the SSPBUF register. Additionally, the SSPSTAT register indicates the various Status conditions.

FIGURE 22-5: SPI MASTER/SLAVE CONNECTION

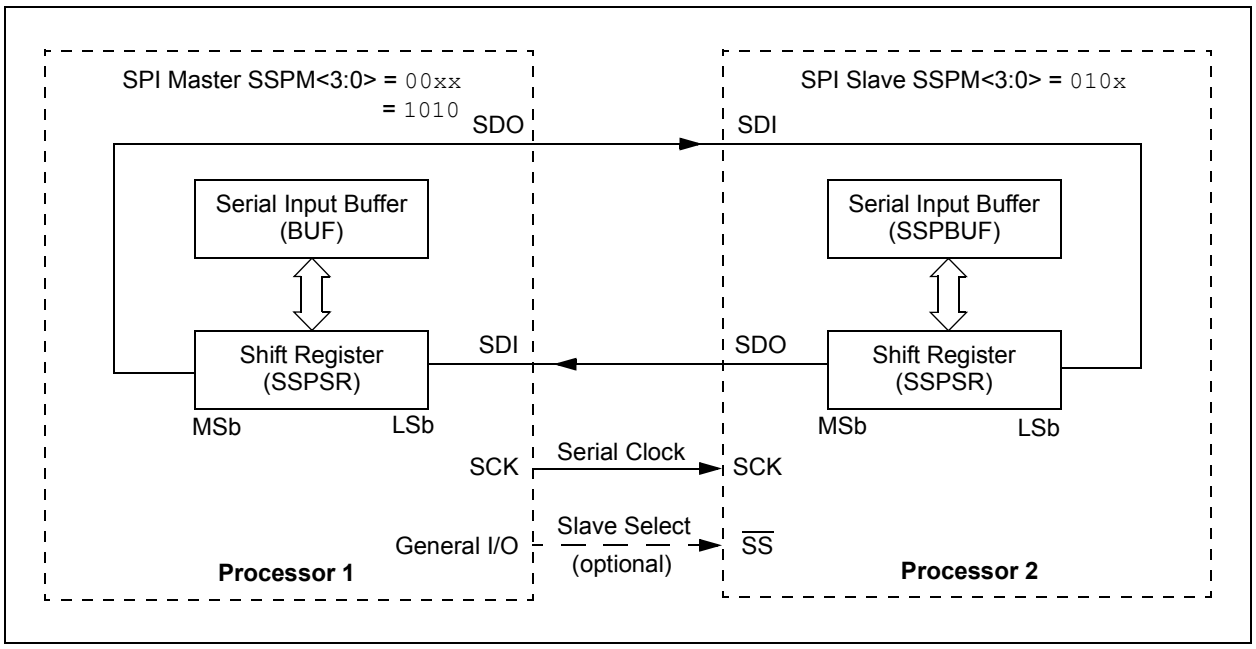

 © 2012 Microchip Technology Inc.

22.2.3 SPI MASTER MODE

The master can initiate the data transfer at any time because it controls the SCK line. The master determines when the slave (Processor 2, Figure 22-5) is to broadcast data by the software protocol.

In Master mode, the data is transmitted/received as soon as the SSPBUF register is written to. If the SPI is only going to receive, the SDO output could be disabled (programmed as an input). The SSPSR register will continue to shift in the signal present on the SDI pin at the programmed clock rate. As each byte is received, it will be loaded into the SSPBUF register as if a normal received byte (interrupts and Status bits appropriately set).

The clock polarity is selected by appropriately programming the CKP bit of the SSPCON1 register and the CKE bit of the SSPSTAT register. This then, would give waveforms for SPI communication as shown in Figure 22-6, Figure 22-8, Figure 22-9 and Figure 22-10, where the MSB is transmitted first. In Master mode, the SPI clock rate (bit rate) is user programmable to be one of the following:

- FOSC/4 (or TCY)
- FOSC/16 (or 4 * TCY)
- FOSC/64 (or 16 * TCY)
- Timer2 output/2
- Fosc/(4 * (SSPADD + 1))

Figure 22-6 shows the waveforms for Master mode.

When the CKE bit is set, the SDO data is valid before there is a clock edge on SCK. The change of the input sample is shown based on the state of the SMP bit. The time when the SSPBUF is loaded with the received data is shown.

FIGURE 22-6: SPI MODE WAVEFORM (MASTER MODE)

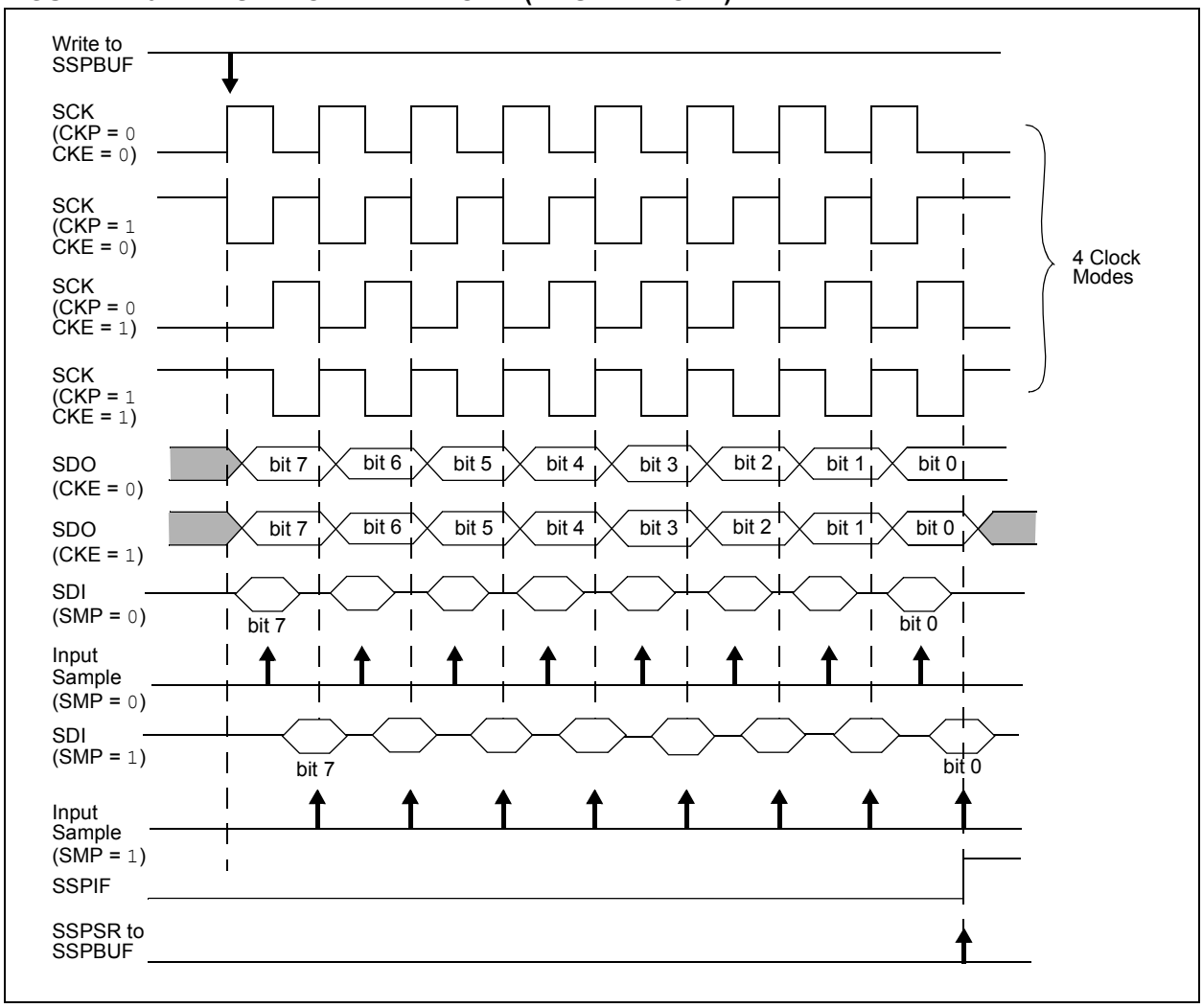

22.2.4 SPI SLAVE MODE

In Slave mode, the data is transmitted and received as external clock pulses appear on SCK. When the last bit is latched, the SSPIF interrupt flag bit is set.

Before enabling the module in SPI Slave mode, the clock line must match the proper Idle state. The clock line can be observed by reading the SCK pin. The Idle state is determined by the CKP bit of the SSPCON1 register.

While in Slave mode, the external clock is supplied by the external clock source on the SCK pin. This external clock must meet the minimum high and low times as specified in the electrical specifications.

While in Sleep mode, the slave can transmit/receive data. The shift register is clocked from the SCK pin input and when a byte is received, the device will generate an interrupt. If enabled, the device will wake-up from Sleep.

22.2.4.1 Daisy-Chain Configuration

The SPI bus can sometimes be connected in a daisy-chain configuration. The first slave output is connected to the second slave input, the second slave output is connected to the third slave input, and so on. The final slave output is connected to the master input. Each slave sends out, during a second group of clock pulses, an exact copy of what was received during the first group of clock pulses. The whole chain acts as one large communication shift register. The daisy-chain feature only requires a single Slave Select line from the master device.

Figure 22-7 shows the block diagram of a typical daisy-chain connection when operating in SPI Mode.

In a daisy-chain configuration, only the most recent byte on the bus is required by the slave. Setting the BOEN bit of the SSPCON3 register will enable writes to the SSPBUF register, even if the previous byte has not been read. This allows the software to ignore data that may not apply to it.

22.2.5 SLAVE SELECT SYNCHRONIZATION

The Slave Select can also be used to synchronize communication. The Slave Select line is held high until the master device is ready to communicate. When the Slave Select line is pulled low, the slave knows that a new transmission is starting.

If the slave fails to receive the communication properly, it will be reset at the end of the transmission, when the Slave Select line returns to a high state. The slave is then ready to receive a new transmission when the Slave Select line is pulled low again. If the Slave Select line is not used, there is a risk that the slave will eventually become out of sync with the master. If the slave misses a bit, it will always be one bit off in future transmissions. Use of the Slave Select line allows the slave and master to align themselves at the beginning of each transmission.

The $\overline{SS}$ pin allows a Synchronous Slave mode. The SPI must be in Slave mode with $\overline{SS}$ pin control enabled (SSPCON1<3:0> = `0100`).

When the $\overline{SS}$ pin is low, transmission and reception are enabled and the SDO pin is driven.

When the $\overline{SS}$ pin goes high, the SDO pin is no longer driven, even if in the middle of a transmitted byte and becomes a floating output. External pull-up/pull-down resistors may be desirable depending on the application.

> **Note 1:** When the SPI is in Slave mode with $\overline{SS}$ pin control enabled (SSPCON1<3:0> = `0100`), the SPI module will reset if the $\overline{SS}$ pin is set to VDD.
>
> **2:** When the SPI is used in Slave mode with CKE set; the user must enable $\overline{SS}$ pin control.
>
> **3:** While operated in SPI Slave mode the SMP bit of the SSPSTAT register must remain clear.

When the SPI module resets, the bit counter is forced to '`0`'. This can be done by either forcing the $\overline{SS}$ pin to a high level or clearing the SSPEN bit.

 © 2012 Microchip Technology Inc.

FIGURE 22-7: SPI DAISY-CHAIN CONNECTION

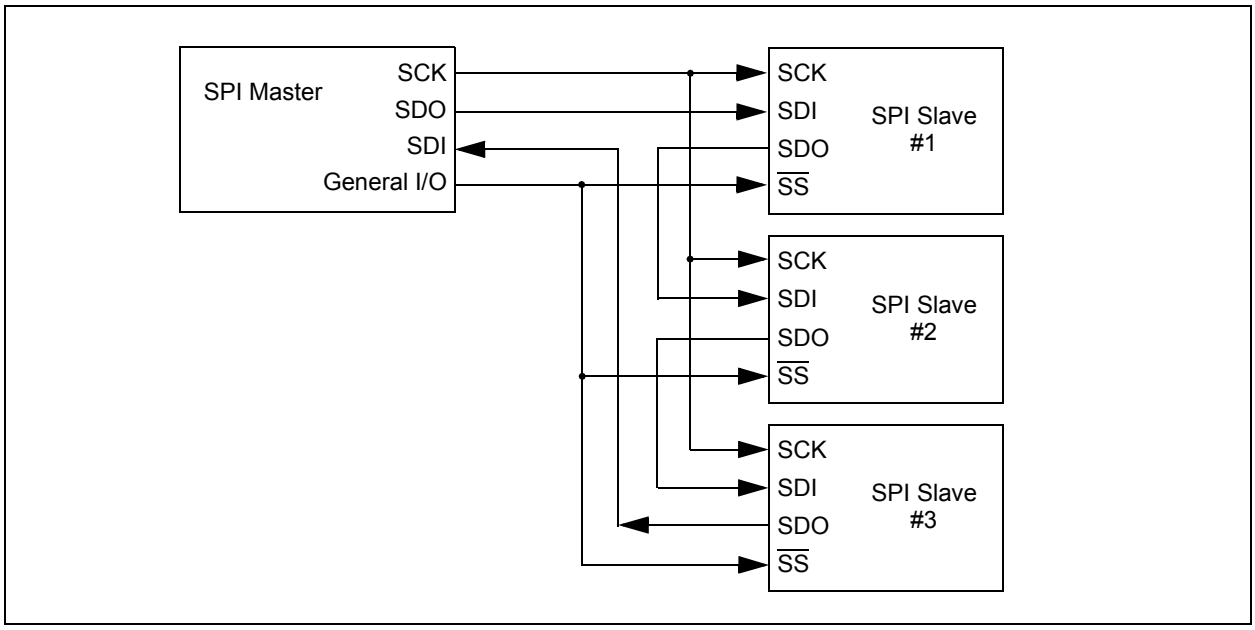

FIGURE 22-8: SLAVE SELECT SYNCHRONOUS WAVEFORM

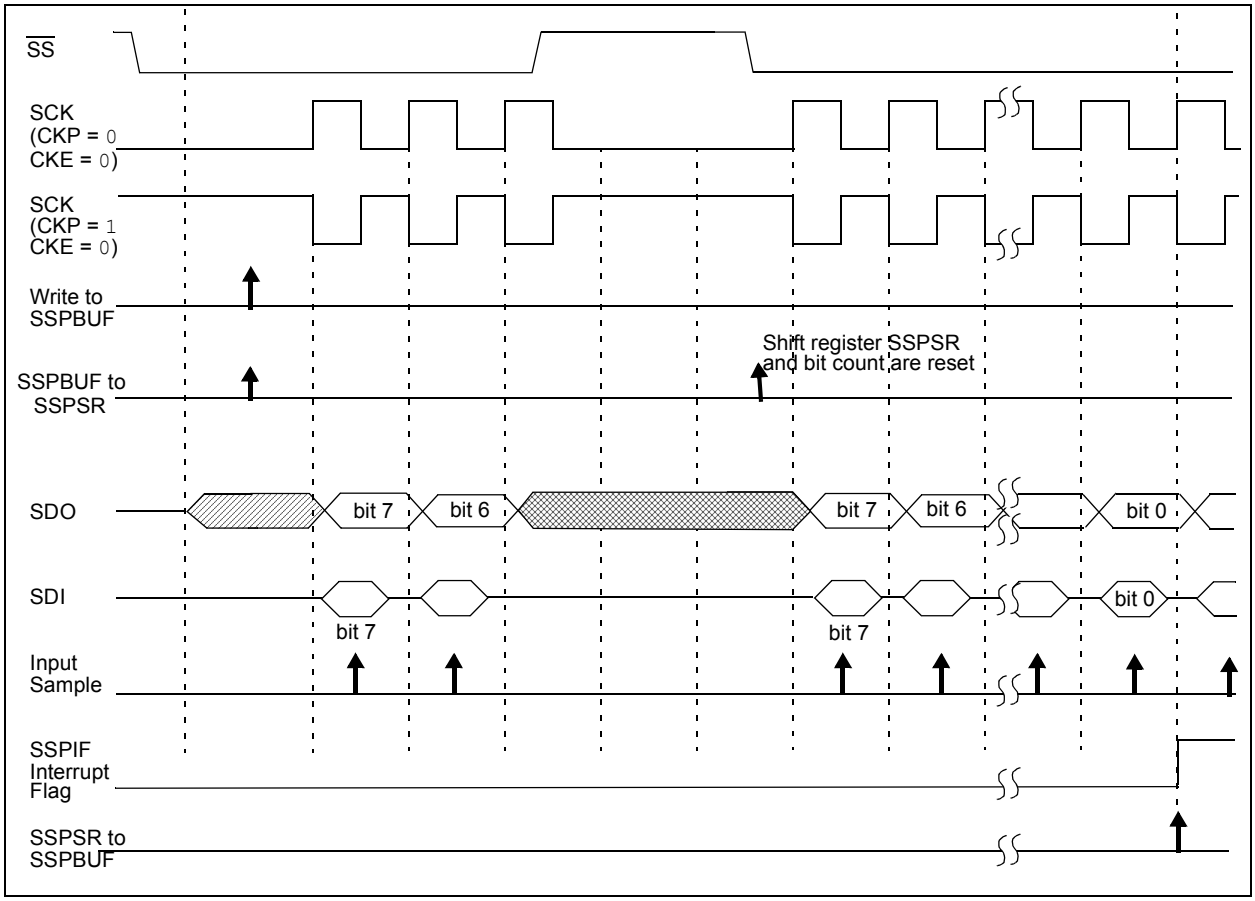

FIGURE 22-9: SPI MODE WAVEFORM (SLAVE MODE WITH CKE = 0)

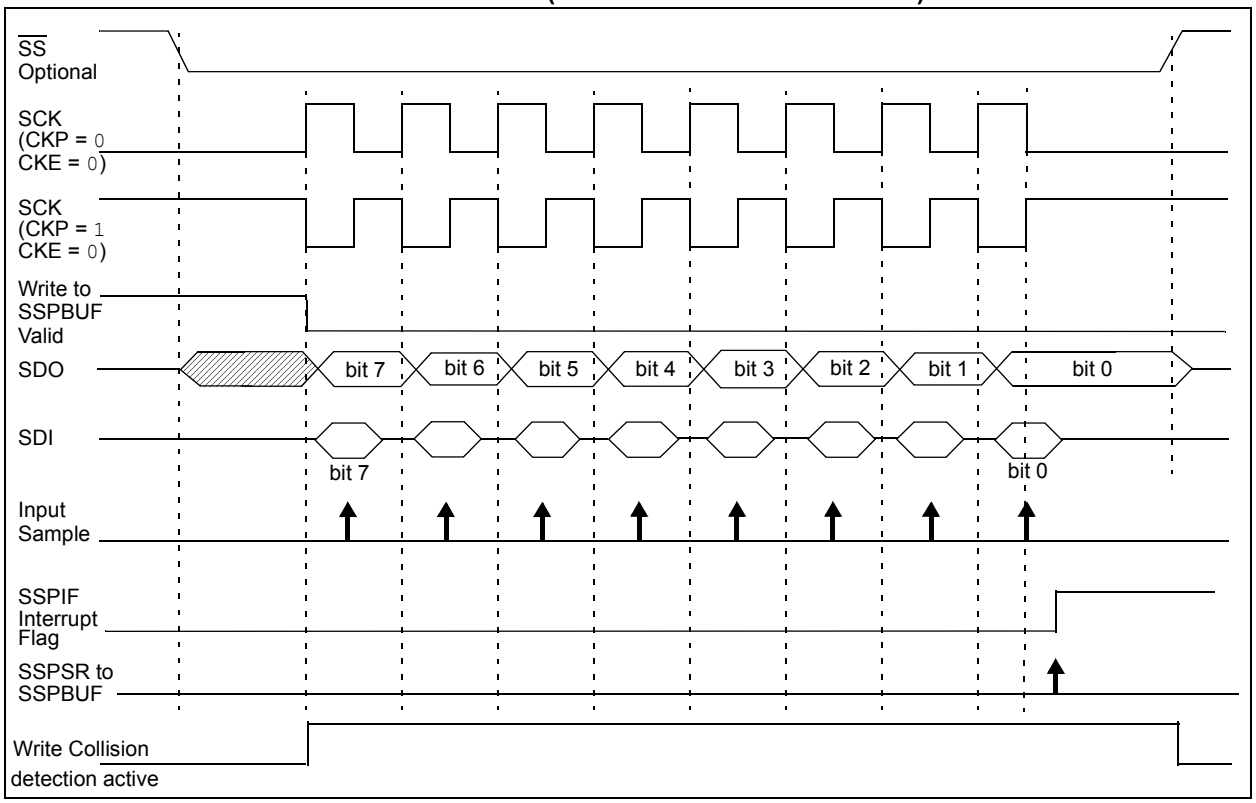

FIGURE 22-10: SPI MODE WAVEFORM (SLAVE MODE WITH CKE = 1)

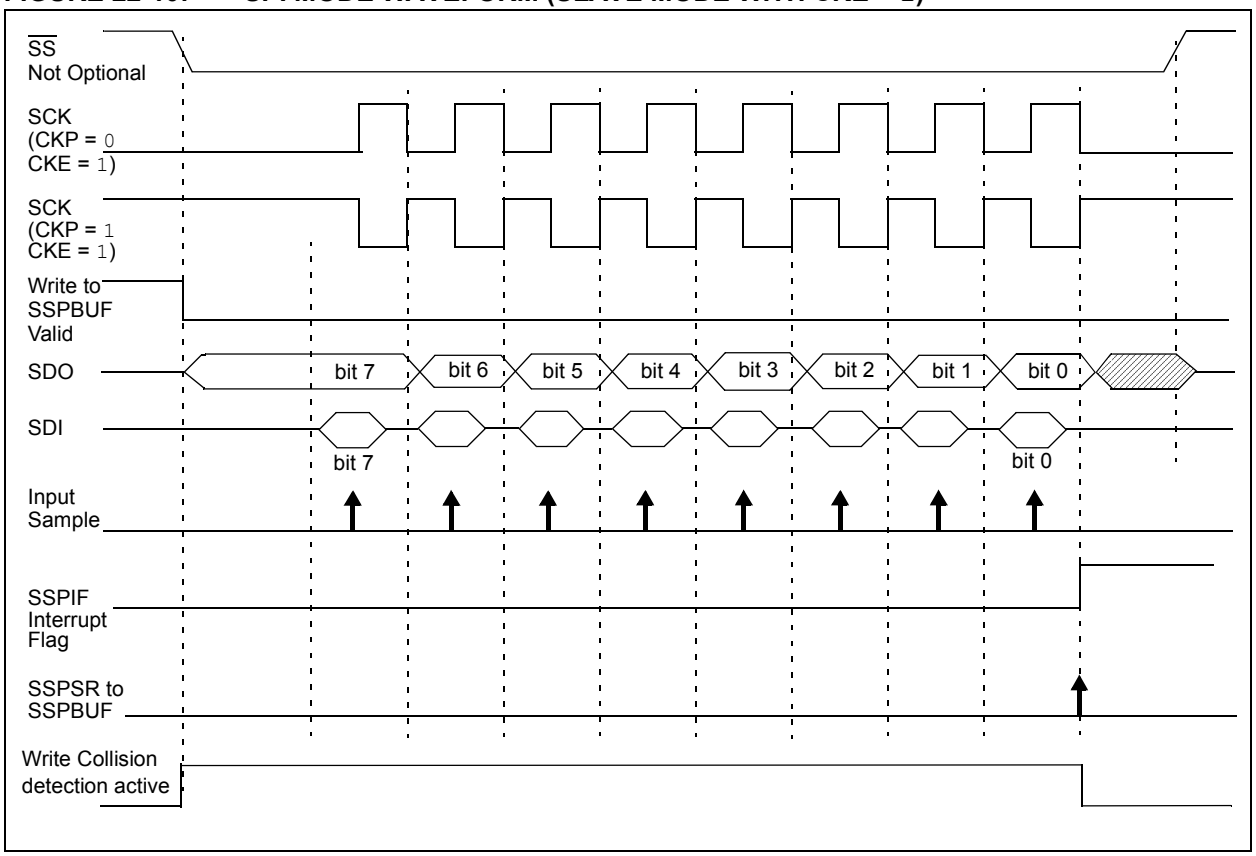

 © 2012 Microchip Technology Inc.

22.2.6 SPI OPERATION IN SLEEP MODE

In SPI Master mode, module clocks may be operating at a different speed than when in full power mode; in the case of the Sleep mode, all clocks are halted.

Special care must be taken by the user when the MSSP clock is much faster than the system clock.

In Slave mode, when MSSP interrupts are enabled, after the master completes sending data, an MSSP interrupt will wake the controller from Sleep.

If an exit from Sleep mode is not desired, MSSP interrupts should be disabled.

In SPI Master mode, when the Sleep mode is selected, all module clocks are halted and the transmission/reception will remain in that state until the device wakes. After the device returns to Run mode, the module will resume transmitting and receiving data.

In SPI Slave mode, the SPI Transmit/Receive Shift register operates asynchronously to the device. This allows the device to be placed in Sleep mode and data to be shifted into the SPI Transmit/Receive Shift register. When all eight bits have been received, the MSSP interrupt flag bit will be set and if enabled, will wake the device.

TABLE 22-1: SUMMARY OF REGISTERS ASSOCIATED WITH SPI OPERATION

Name	Bit 7	Bit 6	Bit 5	Bit 4	Bit 3	Bit 2	Bit 1	Bit 0	Register on Page
ANSELA(3)	—	—	—	ANSA4	—	—	—	—	133
INTCON	GIE	PEIE	TMR0IE	INTE	IOCIE	TMR0IF	INTF	IOCIF	96
PIE1	TMR1GIE	ADIE(3)	RCIE	TXIE	SSP1IE	—	TMR2IE	TMR1IE	97
PIR1	TMR1GIF	ADIF(3)	RCIF	TXIF	SSP1IF	—	TMR2IF	TMR1IF	99
SSP1BUF	Synchronous Serial Port Receive Buffer/Transmit Register								207*
SSP1CON1	WCOL	SSPOV	SSPEN	CKP	SSPM<3:0>				253
SSP1CON3	ACKTIM	PCIE	SCIE	BOEN	SDAHT	SBCDE	AHEN	DHEN	255
SSP1STAT	SMP	CKE	D/$\overline{A}$	P	S	R/$\overline{W}$	UA	BF	251
TRISA	—	—	TRISA5	TRISA4	—(1)	—	—(1)	—(1)	132
TRISC	TRISC7(2)	TRISC6(2)	TRISC5	TRISC4	TRISC3	TRISC2	TRISC1	TRISC0	140

Legend: — = Unimplemented location, read as '0'. Shaded cells are not used by the MSSP in SPI mode.
* Page provides register information.

Note 1: Unimplemented, read as '1'.
2: PIC16(L)F1459 only.
3: PIC16(L)F1455/9 only.

22.3 I²C MODE OVERVIEW

The Inter-Integrated Circuit Bus (I²C) is a multi-master serial data communication bus. Devices communicate in a master/slave environment where the master devices initiate the communication. A Slave device is controlled through addressing.

The I²C bus specifies two signal connections:

- Serial Clock (SCL)
- Serial Data (SDA)

Figure 22-11 shows the block diagram of the MSSP module when operating in I²C mode.

Both the SCL and SDA connections are bidirectional open-drain lines, each requiring pull-up resistors for the supply voltage. Pulling the line to ground is considered a logical zero and letting the line float is considered a logical one.

Figure 22-11 shows a typical connection between two processors configured as master and slave devices.

The I²C bus can operate with one or more master devices and one or more slave devices.

There are four potential modes of operation for a given device:

- Master Transmit mode
  (master is transmitting data to a slave)
- Master Receive mode
  (master is receiving data from a slave)
- Slave Transmit mode
  (slave is transmitting data to a master)
- Slave Receive mode
  (slave is receiving data from the master)

To begin communication, a master device starts out in Master Transmit mode. The master device sends out a Start bit followed by the address byte of the slave it intends to communicate with. This is followed by a single Read/Write bit, which determines whether the master intends to transmit to or receive data from the slave device.

If the requested slave exists on the bus, it will respond with an Acknowledge bit, otherwise known as an $\overline{\text{ACK}}$. The master then continues in either Transmit mode or Receive mode and the slave continues in the complement, either in Receive mode or Transmit mode, respectively.

A Start bit is indicated by a high-to-low transition of the SDA line while the SCL line is held high. Address and data bytes are sent out, Most Significant bit (MSb) first. The Read/Write bit is sent out as a logical one when the master intends to read data from the slave, and is sent out as a logical zero when it intends to write data to the slave.

FIGURE 22-11: I²C MASTER/ SLAVE CONNECTION

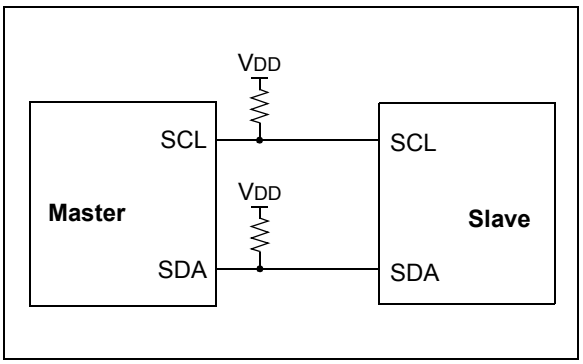

The Acknowledge bit ($\overline{\text{ACK}}$) is an active-low signal, which holds the SDA line low to indicate to the transmitter that the slave device has received the transmitted data and is ready to receive more.

The transition of a data bit is always performed while the SCL line is held low. Transitions that occur while the SCL line is held high are used to indicate Start and Stop bits.

If the master intends to write to the slave, then it repeatedly sends out a byte of data, with the slave responding after each byte with an $\overline{\text{ACK}}$ bit. In this example, the master device is in Master Transmit mode and the slave is in Slave Receive mode.

If the master intends to read from the slave, then it repeatedly receives a byte of data from the slave, and responds after each byte with an $\overline{\text{ACK}}$ bit. In this example, the master device is in Master Receive mode and the slave is Slave Transmit mode.

On the last byte of data communicated, the master device may end the transmission by sending a Stop bit. If the master device is in Receive mode, it sends the Stop bit in place of the last $\overline{\text{ACK}}$ bit. A Stop bit is indicated by a low-to-high transition of the SDA line while the SCL line is held high.

In some cases, the master may want to maintain control of the bus and re-initiate another transmission. If so, the master device may send another Start bit in place of the Stop bit or last $\overline{\text{ACK}}$ bit when it is in receive mode.

The I²C bus specifies three message protocols;

- Single message where a master writes data to a slave.
- Single message where a master reads data from a slave.
- Combined message where a master initiates a minimum of two writes, or two reads, or a combination of writes and reads, to one or more slaves.

 © 2012 Microchip Technology Inc.

When one device is transmitting a logical one, or letting the line float, and a second device is transmitting a logical zero, or holding the line low, the first device can detect that the line is not a logical one. This detection, when used on the SCL line, is called clock stretching. Clock stretching gives slave devices a mechanism to control the flow of data. When this detection is used on the SDA line, it is called arbitration. Arbitration ensures that there is only one master device communicating at any single time.

22.3.1 CLOCK STRETCHING

When a slave device has not completed processing data, it can delay the transfer of more data through the process of Clock Stretching. An addressed slave device may hold the SCL clock line low after receiving or sending a bit, indicating that it is not yet ready to continue. The master that is communicating with the slave will attempt to raise the SCL line in order to transfer the next bit, but will detect that the clock line has not yet been released. Because the SCL connection is open-drain, the slave has the ability to hold that line low until it is ready to continue communicating.

Clock stretching allows receivers that cannot keep up with a transmitter to control the flow of incoming data.

22.3.2 ARBITRATION

Each master device must monitor the bus for Start and Stop bits. If the device detects that the bus is busy, it cannot begin a new message until the bus returns to an Idle state.

However, two master devices may try to initiate a transmission on or about the same time. When this occurs, the process of arbitration begins. Each transmitter checks the level of the SDA data line and compares it to the level that it expects to find. The first transmitter to observe that the two levels do not match, loses arbitration, and must stop transmitting on the SDA line.

For example, if one transmitter holds the SDA line to a logical one (lets it float) and a second transmitter holds it to a logical zero (pulls it low), the result is that the SDA line will be low. The first transmitter then observes that the level of the line is different than expected and concludes that another transmitter is communicating.

The first transmitter to notice this difference is the one that loses arbitration and must stop driving the SDA line. If this transmitter is also a master device, it also must stop driving the SCL line. It then can monitor the lines for a Stop condition before trying to reissue its transmission. In the meantime, the other device that has not noticed any difference between the expected and actual levels on the SDA line continues with its original transmission. It can do so without any complications, because so far, the transmission appears exactly as expected with no other transmitter disturbing the message.

Slave Transmit mode can also be arbitrated, when a master addresses multiple slaves, but this is less common.

If two master devices are sending a message to two different slave devices at the address stage, the master sending the lower slave address always wins arbitration. When two master devices send messages to the same slave address, and addresses can sometimes refer to multiple slaves, the arbitration process must continue into the data stage.

Arbitration usually occurs very rarely, but it is a necessary process for proper multi-master support.

22.4 I²C MODE OPERATION

All MSSP I²C communication is byte oriented and shifted out MSb first. Six SFR registers and two interrupt flags interface the module with the PIC® microcontroller and user software. Two pins, SDA and SCL, are exercised by the module to communicate with other external I²C devices.

22.4.1 BYTE FORMAT

All communication in I²C is done in 9-bit segments. A byte is sent from a master to a slave or vice-versa, followed by an Acknowledge bit sent back. After the 8th falling edge of the SCL line, the device outputting data on the SDA changes that pin to an input and reads in an acknowledge value on the next clock pulse.

The clock signal, SCL, is provided by the master. Data is valid to change while the SCL signal is low, and sampled on the rising edge of the clock. Changes on the SDA line while the SCL line is high define special conditions on the bus, explained below.

22.4.2 DEFINITION OF I²C TERMINOLOGY

There is language and terminology in the description of I²C communication that have definitions specific to I²C. That word usage is defined below and may be used in the rest of this document without explanation. This table was adapted from the Philips I²C specification.

22.4.3 SDA AND SCL PINS

Selection of any I²C mode with the SSPEN bit set, forces the SCL and SDA pins to be open-drain. These pins should be set by the user to inputs by setting the appropriate TRIS bits.

> **Note:** Data is tied to output zero when an I²C mode is enabled.

22.4.4 SDA HOLD TIME

The hold time of the SDA pin is selected by the SDAHT bit of the SSPCON3 register. Hold time is the time SDA is held valid after the falling edge of SCL. Setting the SDAHT bit selects a longer 300 ns minimum hold time and may help on buses with large capacitance.

TABLE 22-2: I²C BUS TERMS

TERM	Description
Transmitter	The device which shifts data out onto the bus.
Receiver	The device which shifts data in from the bus.
Master	The device that initiates a transfer, generates clock signals and terminates a transfer.
Slave	The device addressed by the master.
Multi-master	A bus with more than one device that can initiate data transfers.
Arbitration	Procedure to ensure that only one master at a time controls the bus. Winning arbitration ensures that the message is not corrupted.
Synchronization	Procedure to synchronize the clocks of two or more devices on the bus.
Idle	No master is controlling the bus, and both SDA and SCL lines are high.
Active	Any time one or more master devices are controlling the bus.
Addressed Slave	Slave device that has received a matching address and is actively being clocked by a master.
Matching Address	Address byte that is clocked into a slave that matches the value stored in SSPADD.
Write Request	Slave receives a matching address with R/$\overline{W}$ bit clear, and is ready to clock in data.
Read Request	Master sends an address byte with the R/$\overline{W}$ bit set, indicating that it wishes to clock data out of the Slave. This data is the next and all following bytes until a Restart or Stop.
Clock Stretching	When a device on the bus hold SCL low to stall communication.
Bus Collision	Any time the SDA line is sampled low by the module while it is outputting and expected high state.

 © 2012 Microchip Technology Inc.

22.4.5 START CONDITION

The I²C specification defines a Start condition as a transition of SDA from a high to a low state while SCL line is high. A Start condition is always generated by the master and signifies the transition of the bus from an Idle to an Active state. Figure 22-12 shows wave forms for Start and Stop conditions.

A bus collision can occur on a Start condition if the module samples the SDA line low before asserting it low. This does not conform to the I²C Specification that states no bus collision can occur on a Start.

22.4.6 STOP CONDITION

A Stop condition is a transition of the SDA line from low-to-high state while the SCL line is high.

> **Note:** At least one SCL low time must appear before a Stop is valid, therefore, if the SDA line goes low then high again while the SCL line stays high, only the Start condition is detected.

22.4.7 RESTART CONDITION

A Restart is valid any time that a Stop would be valid. A master can issue a Restart if it wishes to hold the bus after terminating the current transfer. A Restart has the same effect on the slave that a Start would, resetting all slave logic and preparing it to clock in an address. The master may want to address the same or another slave. Figure 22-13 shows wave forms for a Restart condition.

In 10-bit Addressing Slave mode a Restart is required for the master to clock data out of the addressed slave. Once a slave has been fully addressed, matching both high and low address bytes, the master can issue a Restart and the high address byte with the R/$\overline{W}$ bit set. The slave logic will then hold the clock and prepare to clock out data.

After a full match with R/$\overline{W}$ clear in 10-bit mode, a prior match flag is set and maintained. Until a Stop condition, a high address with R/$\overline{W}$ clear, or high address match fails.

22.4.8 START/STOP CONDITION INTERRUPT MASKING

The SCIE and PCIE bits of the SSPCON3 register can enable the generation of an interrupt in Slave modes that do not typically support this function. Slave modes where interrupt on Start and Stop detect are already enabled, these bits will have no effect.

FIGURE 22-12: I²C START AND STOP CONDITIONS

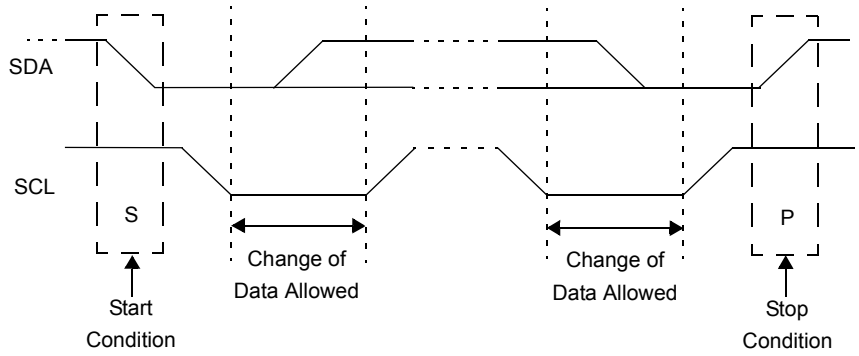

FIGURE 22-13: I²C RESTART CONDITION

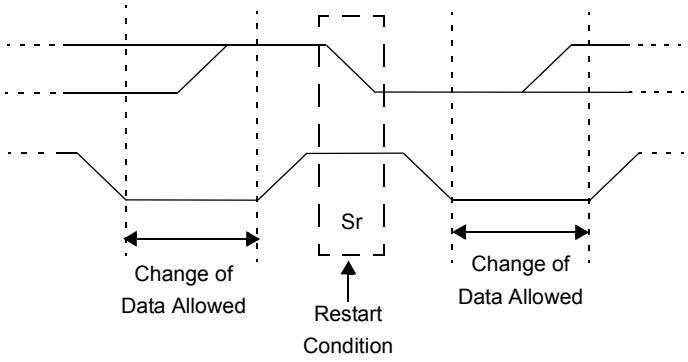

 © 2012 Microchip Technology Inc.

22.4.9 ACKNOWLEDGE SEQUENCE

The 9th SCL pulse for any transferred byte in I^{2}C is dedicated as an Acknowledge. It allows receiving devices to respond back to the transmitter by pulling the SDA line low. The transmitter must release control of the line during this time to shift in the response. The Acknowledge ($\overline{ACK}$) is an active-low signal, pulling the SDA line low indicated to the transmitter that the device has received the transmitted data and is ready to receive more.

The result of an $\overline{ACK}$ is placed in the ACKSTAT bit of the SSPCON2 register.

Slave software, when the AHEN and DHEN bits are set, allow the user to set the $\overline{ACK}$ value sent back to the transmitter. The ACKDT bit of the SSPCON2 register is set/cleared to determine the response.

Slave hardware will generate an $\overline{ACK}$ response if the AHEN and DHEN bits of the SSPCON3 register are clear.

There are certain conditions where an $\overline{ACK}$ will not be sent by the slave. If the BF bit of the SSPSTAT register or the SSPOV bit of the SSPCON1 register are set when a byte is received.

When the module is addressed, after the 8th falling edge of SCL on the bus, the ACKTIM bit of the SSPCON3 register is set. The ACKTIM bit indicates the acknowledge time of the active bus. The ACKTIM Status bit is only active when the AHEN bit or DHEN bit is enabled.

22.5 I^{2}C SLAVE MODE OPERATION

The MSSP Slave mode operates in one of four modes selected in the SSPM bits of SSPCON1 register. The modes can be divided into 7-bit and 10-bit Addressing mode. 10-bit Addressing modes operate the same as 7-bit with some additional overhead for handling the larger addresses.

Modes with Start and Stop bit interrupts operated the same as the other modes with SSPIF additionally getting set upon detection of a Start, Restart, or Stop condition.

22.5.1 SLAVE MODE ADDRESSES

The SSPADD register (Register 22-6) contains the Slave mode address. The first byte received after a Start or Restart condition is compared against the value stored in this register. If the byte matches, the value is loaded into the SSPBUF register and an interrupt is generated. If the value does not match, the module goes idle and no indication is given to the software that anything happened.

The SSP Mask register (Register 22-5) affects the address matching process. See **Section 22.5.9 "SSP Mask Register"** for more information.

22.5.1.1 I^{2}C Slave 7-bit Addressing Mode

In 7-bit Addressing mode, the LSb of the received data byte is ignored when determining if there is an address match.

22.5.1.2 I^{2}C Slave 10-bit Addressing Mode

In 10-bit Addressing mode, the first received byte is compared to the binary value of '1 1 1 1 0 A9 A8 0'. A9 and A8 are the two MSb of the 10-bit address and stored in bits 2 and 1 of the SSPADD register.

After the acknowledge of the high byte the UA bit is set and SCL is held low until the user updates SSPADD with the low address. The low address byte is clocked in and all eight bits are compared to the low address value in SSPADD. Even if there is not an address match; SSPIF and UA are set, and SCL is held low until SSPADD is updated to receive a high byte again. When SSPADD is updated the UA bit is cleared. This ensures the module is ready to receive the high address byte on the next communication.

A high and low address match as a write request is required at the start of all 10-bit addressing communication. A transmission can be initiated by issuing a Restart once the slave is addressed, and clocking in the high address with the R/$\overline{W}$ bit set. The slave hardware will then acknowledge the read request and prepare to clock out data. This is only valid for a slave after it has received a complete high and low address byte match.

22.5.2 SLAVE RECEPTION

When the R/$\overline{W}$ bit of a matching received address byte is clear, the R/$\overline{W}$ bit of the SSPSTAT register is cleared. The received address is loaded into the SSPBUF register and acknowledged.

When the overflow condition exists for a received address, then not Acknowledge is given. An overflow condition is defined as either bit BF of the SSPSTAT register is set, or bit SSPOV of the SSPCON1 register is set. The BOEN bit of the SSPCON3 register modifies this operation. For more information see Register 22-4.

An MSSP interrupt is generated for each transferred data byte. Flag bit, SSPIF, must be cleared by software.

When the SEN bit of the SSPCON2 register is set, SCL will be held low (clock stretch) following each received byte. The clock must be released by setting the CKP bit of the SSPCON1 register, except sometimes in 10-bit mode. See **Section 22.2.3 "SPI Master Mode"** for more detail.

22.5.2.1 7-bit Addressing Reception

This section describes a standard sequence of events for the MSSP module configured as an I^{2}C Slave in 7-bit Addressing mode. All decisions made by hardware or software and their effect on reception. Figure 22-14 and Figure 22-15 is used as a visual reference for this description.

This is a step by step process of what typically must be done to accomplish I^{2}C communication.

1. Start bit detected.
2. S bit of SSPSTAT is set; SSPIF is set if interrupt on Start detect is enabled.
3. Matching address with R/$\overline{W}$ bit clear is received.
4. The slave pulls SDA low sending an $\overline{ACK}$ to the master, and sets SSPIF bit.
5. Software clears the SSPIF bit.
6. Software reads received address from SSPBUF clearing the BF flag.
7. If SEN = 1; Slave software sets CKP bit to release the SCL line.
8. The master clocks out a data byte.
9. Slave drives SDA low sending an $\overline{ACK}$ to the master, and sets SSPIF bit.
10. Software clears SSPIF.
11. Software reads the received byte from SSPBUF clearing BF.
12. Steps 8-12 are repeated for all received bytes from the master.
13. Master sends Stop condition, setting P bit of SSPSTAT, and the bus goes idle.

22.5.2.2 7-bit Reception with AHEN and DHEN

Slave device reception with AHEN and DHEN set operate the same as without these options with extra interrupts and clock stretching added after the 8th falling edge of SCL. These additional interrupts allow the slave software to decide whether it wants to $\overline{ACK}$ the receive address or data byte, rather than the hardware. This functionality adds support for PMBus™ that was not present on previous versions of this module.

This list describes the steps that need to be taken by slave software to use these options for I^{2}C communication. Figure 22-16 displays a module using both address and data holding. Figure 22-17 includes the operation with the SEN bit of the SSPCON2 register set.

1. S bit of SSPSTAT is set; SSPIF is set if interrupt on Start detect is enabled.
2. Matching address with R/$\overline{W}$ bit clear is clocked in. SSPIF is set and CKP cleared after the 8th falling edge of SCL.
3. Slave clears the SSPIF.
4. Slave can look at the ACKTIM bit of the SSPCON3 register to determine if the SSPIF was after or before the $\overline{ACK}$.
5. Slave reads the address value from SSPBUF, clearing the BF flag.
6. Slave sets $\overline{ACK}$ value clocked out to the master by setting ACKDT.
7. Slave releases the clock by setting CKP.
8. SSPIF is set after an $\overline{ACK}$, not after a NACK.
9. If SEN = 1 the slave hardware will stretch the clock after the $\overline{ACK}$.
10. Slave clears SSPIF.

Note: SSPIF is still set after the 9th falling edge of SCL even if there is no clock stretching and BF has been cleared. Only if NACK is sent to Master is SSPIF not set

11. SSPIF set and CKP cleared after 8th falling edge of SCL for a received data byte.
12. Slave looks at ACKTIM bit of SSPCON3 to determine the source of the interrupt.
13. Slave reads the received data from SSPBUF clearing BF.
14. Steps 7-14 are the same for each received data byte.
15. Communication is ended by either the slave sending an $\overline{ACK}$ = 1, or the master sending a Stop condition. If a Stop is sent and Interrupt on Stop Detect is disabled, the slave will only know by polling the P bit of the SSTSTAT register.

 © 2012 Microchip Technology Inc.

FIGURE 22-14: I²C SLAVE, 7-BIT ADDRESS, RECEPTION (SEN = 0, AHEN = 0, DHEN = 0)

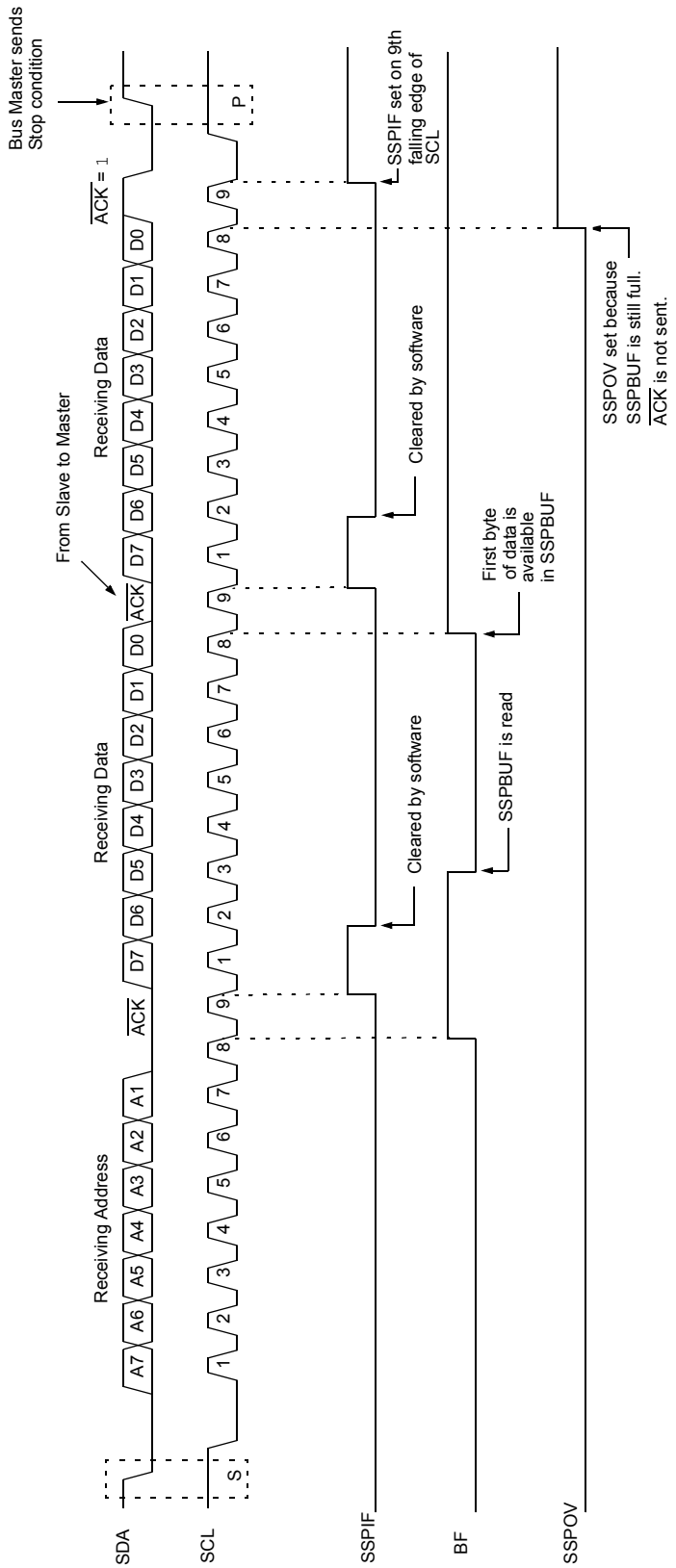

FIGURE 22-15: I²C SLAVE, 7-BIT ADDRESS, RECEPTION (SEN = 1, AHEN = 0, DHEN = 0)

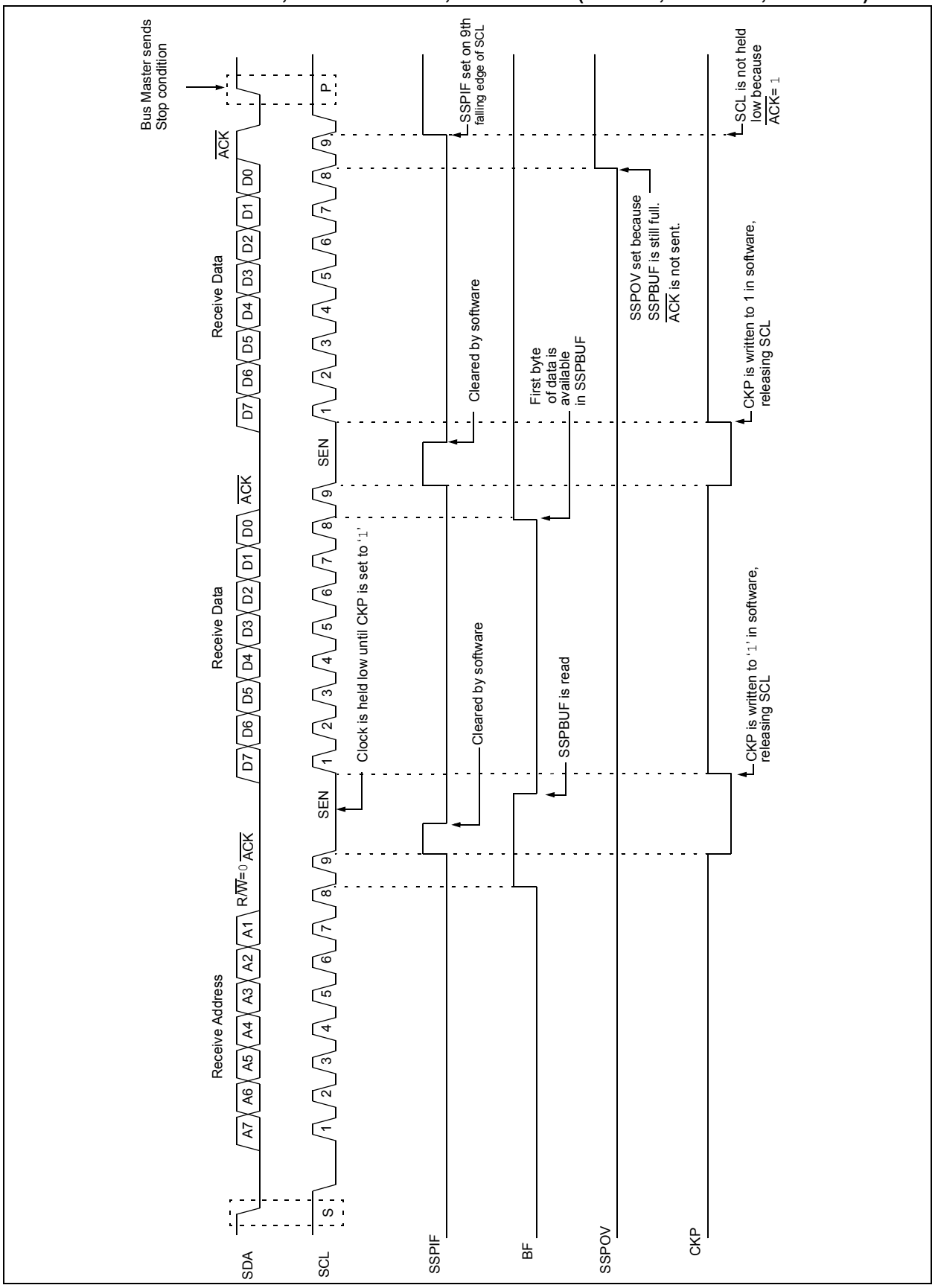

 © 2012 Microchip Technology Inc.

FIGURE 22-16: I²C SLAVE, 7-BIT ADDRESS, RECEPTION (SEN = 0, AHEN = 1, DHEN = 1)

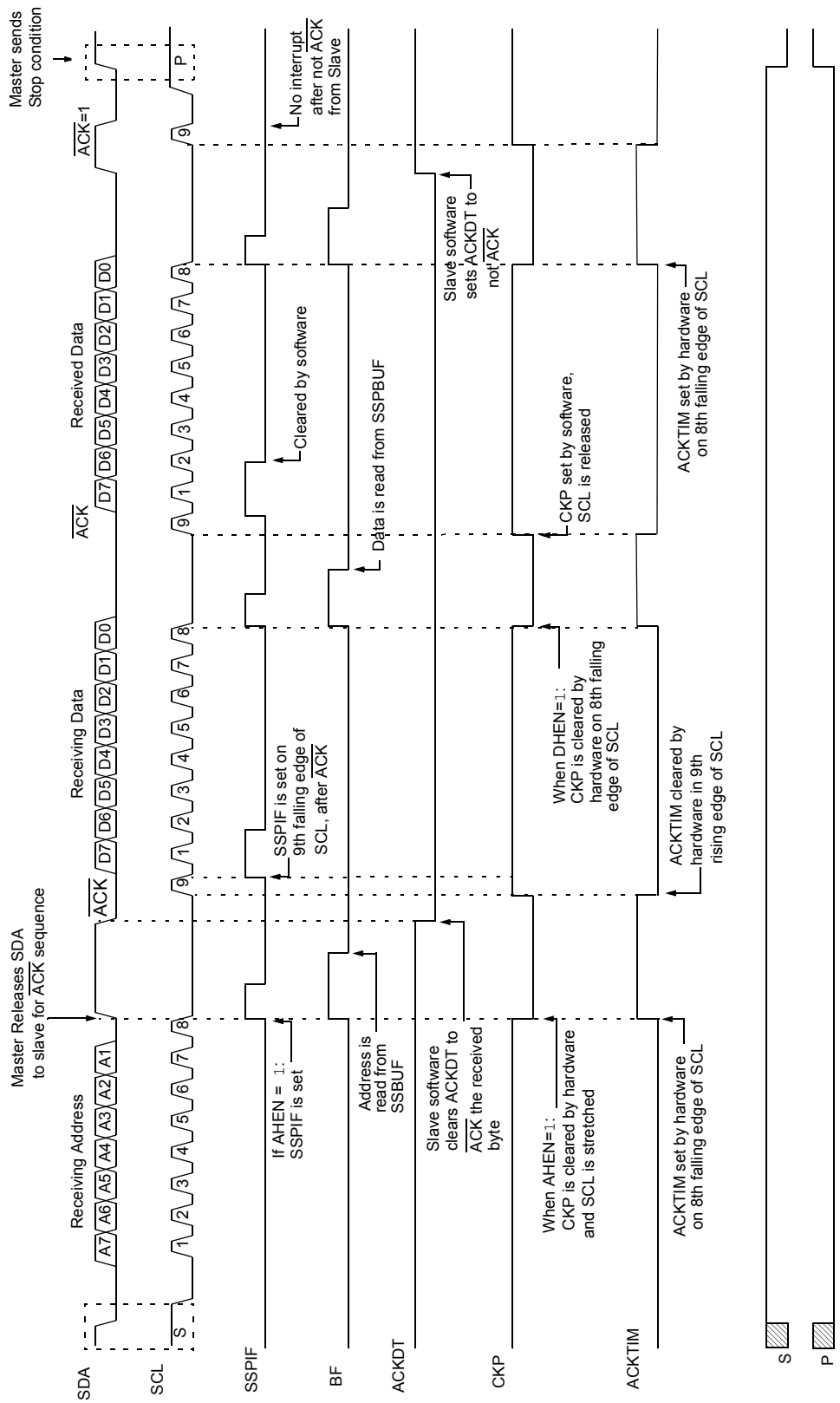

FIGURE 22-17: I²C SLAVE, 7-BIT ADDRESS, RECEPTION (SEN = 1, AHEN = 1, DHEN = 1)

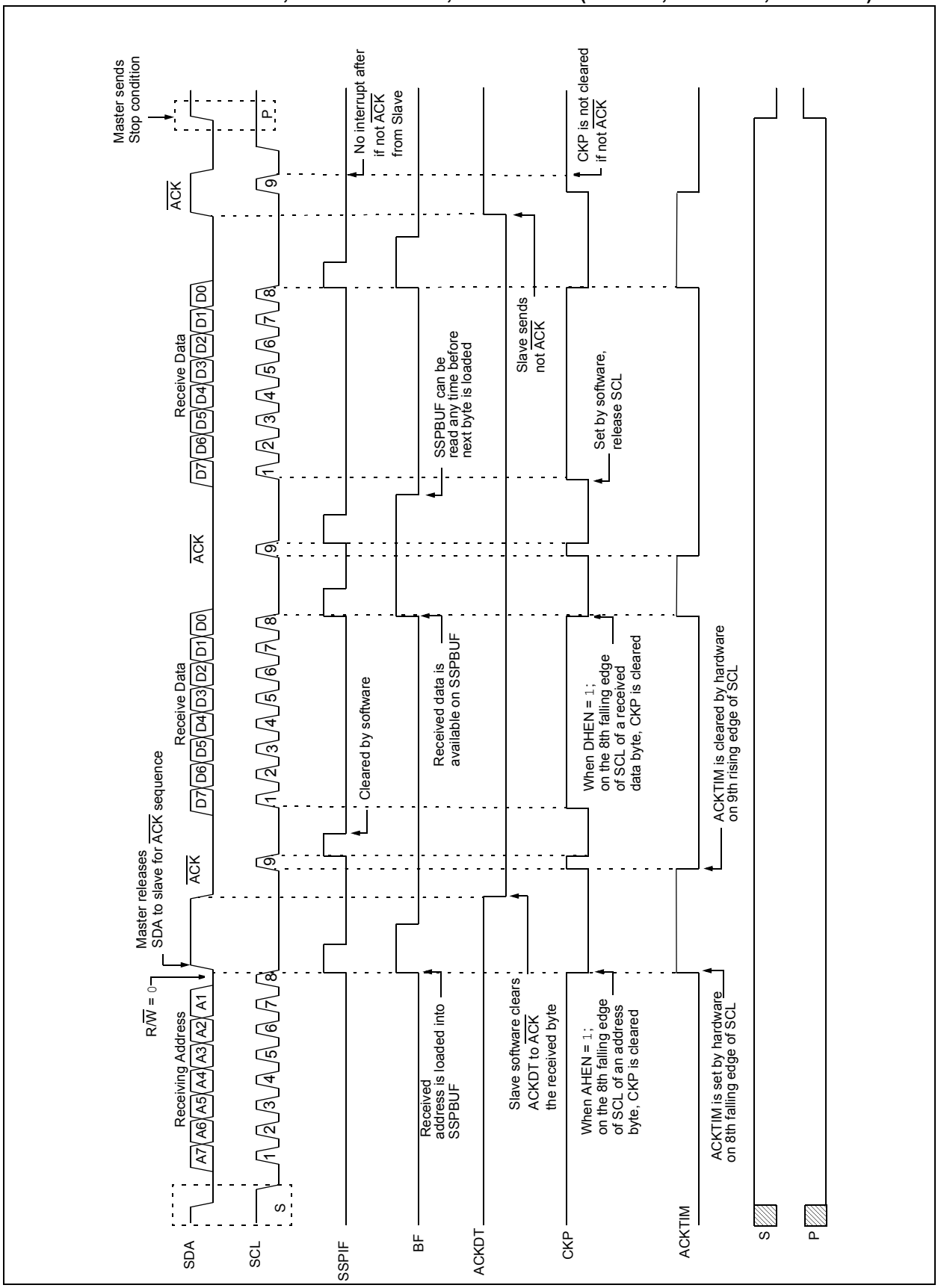

 © 2012 Microchip Technology Inc.

22.5.3 SLAVE TRANSMISSION

When the R/$\overline{W}$ bit of the incoming address byte is set and an address match occurs, the R/$\overline{W}$ bit of the SSPSTAT register is set. The received address is loaded into the SSPBUF register, and an $\overline{ACK}$ pulse is sent by the slave on the ninth bit.

Following the $\overline{ACK}$, slave hardware clears the CKP bit and the SCL pin is held low (see **Section 22.5.6 "Clock Stretching"** for more detail). By stretching the clock, the master will be unable to assert another clock pulse until the slave is done preparing the transmit data.

The transmit data must be loaded into the SSPBUF register which also loads the SSPSR register. Then the SCL pin should be released by setting the CKP bit of the SSPCON1 register. The eight data bits are shifted out on the falling edge of the SCL input. This ensures that the SDA signal is valid during the SCL high time.

The $\overline{ACK}$ pulse from the master-receiver is latched on the rising edge of the ninth SCL input pulse. This $\overline{ACK}$ value is copied to the ACKSTAT bit of the SSPCON2 register. If ACKSTAT is set (not $\overline{ACK}$), then the data transfer is complete. In this case, when the not $\overline{ACK}$ is latched by the slave, the slave goes idle and waits for another occurrence of the Start bit. If the SDA line was low ($\overline{ACK}$), the next transmit data must be loaded into the SSPBUF register. Again, the SCL pin must be released by setting bit CKP.

An MSSP interrupt is generated for each data transfer byte. The SSPIF bit must be cleared by software and the SSPSTAT register is used to determine the status of the byte. The SSPIF bit is set on the falling edge of the ninth clock pulse.

22.5.3.1 Slave Mode Bus Collision

A slave receives a read request and begins shifting data out on the SDA line. If a bus collision is detected and the SBCDE bit of the SSPCON3 register is set, the BCLIF bit of the PIR register is set. Once a bus collision is detected, the slave goes idle and waits to be addressed again. User software can use the BCLIF bit to handle a slave bus collision.

22.5.3.2 7-bit Transmission

A master device can transmit a read request to a slave, and then clock data out of the slave. The list below outlines what software for a slave will need to do to accomplish a standard transmission. Figure 22-18 can be used as a reference to this list.

1. Master sends a Start condition on SDA and SCL.
2. S bit of SSPSTAT is set; SSPIF is set if interrupt on Start detect is enabled.
3. Matching address with R/$\overline{W}$ bit set is received by the Slave setting SSPIF bit.
4. Slave hardware generates an $\overline{ACK}$ and sets SSPIF.
5. SSPIF bit is cleared by user.
6. Software reads the received address from SSPBUF, clearing BF.
7. R/$\overline{W}$ is set so CKP was automatically cleared after the $\overline{ACK}$.
8. The slave software loads the transmit data into SSPBUF.
9. CKP bit is set releasing SCL, allowing the master to clock the data out of the slave.
10. SSPIF is set after the $\overline{ACK}$ response from the master is loaded into the ACKSTAT register.
11. SSPIF bit is cleared.
12. The slave software checks the ACKSTAT bit to see if the master wants to clock out more data.

Note 1: If the master $\overline{ACK}$s the clock will be stretched.

2: ACKSTAT is the only bit updated on the rising edge of SCL (9th) rather than the falling.

13. Steps 9-13 are repeated for each transmitted byte.
14. If the master sends a not $\overline{ACK}$; the clock is not held, but SSPIF is still set.
15. The master sends a Restart condition or a Stop.
16. The slave is no longer addressed.

FIGURE 22-18: I²C SLAVE, 7-BIT ADDRESS, TRANSMISSION (AHEN = 0)

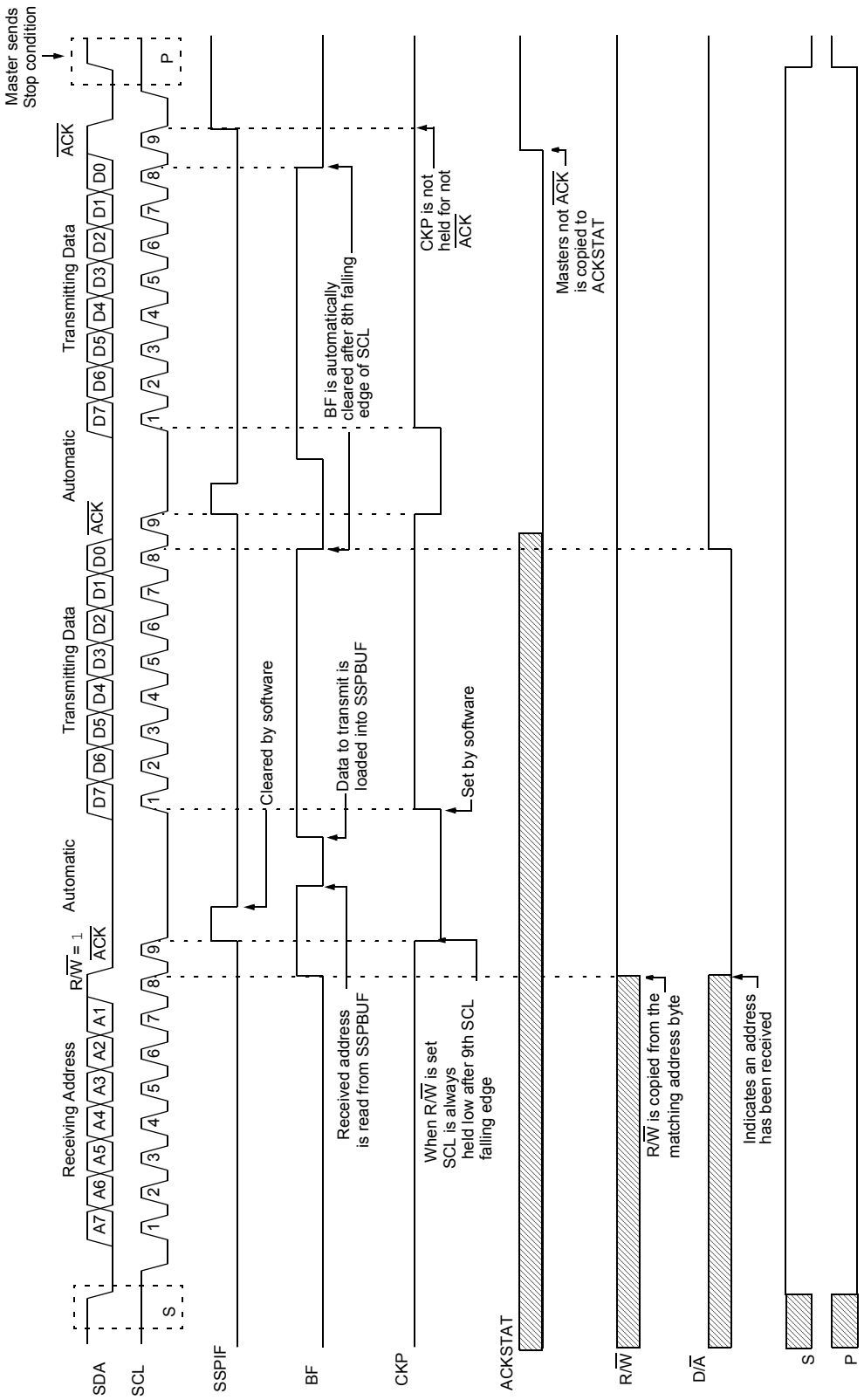

 © 2012 Microchip Technology Inc.

22.5.3.3 7-bit Transmission with Address Hold Enabled

Setting the AHEN bit of the SSPCON3 register enables additional clock stretching and interrupt generation after the 8th falling edge of a received matching address. Once a matching address has been clocked in, CKP is cleared and the SSPIF interrupt is set.

Figure 22-19 displays a standard waveform of a 7-bit Address Slave Transmission with AHEN enabled.

1. Bus starts Idle.
2. Master sends Start condition; the S bit of SSPSTAT is set; SSPIF is set if interrupt on Start detect is enabled.
3. Master sends matching address with R/$\overline{W}$ bit set. After the 8th falling edge of the SCL line the CKP bit is cleared and SSPIF interrupt is generated.
4. Slave software clears SSPIF.
5. Slave software reads ACKTIM bit of SSPCON3 register, and R/$\overline{W}$ and D/$\overline{A}$ of the SSPSTAT register to determine the source of the interrupt.
6. Slave reads the address value from the SSPBUF register clearing the BF bit.
7. Slave software decides from this information if it wishes to $\overline{ACK}$ or not $\overline{ACK}$ and sets ACKDT bit of the SSPCON2 register accordingly.
8. Slave sets the CKP bit releasing SCL.
9. Master clocks in the $\overline{ACK}$ value from the slave.
10. Slave hardware automatically clears the CKP bit and sets SSPIF after the $\overline{ACK}$ if the R/$\overline{W}$ bit is set.
11. Slave software clears SSPIF.
12. Slave loads value to transmit to the master into SSPBUF setting the BF bit.

> **Note:** SSPBUF cannot be loaded until after the $\overline{ACK}$.

13. Slave sets CKP bit releasing the clock.
14. Master clocks out the data from the slave and sends an $\overline{ACK}$ value on the 9th SCL pulse.
15. Slave hardware copies the $\overline{ACK}$ value into the ACKSTAT bit of the SSPCON2 register.
16. Steps 10-15 are repeated for each byte transmitted to the master from the slave.
17. If the master sends a not $\overline{ACK}$ the slave releases the bus allowing the master to send a Stop and end the communication.

> **Note:** Master must send a not $\overline{ACK}$ on the last byte to ensure that the slave releases the SCL line to receive a Stop.

FIGURE 22-19: I²C SLAVE, 7-BIT ADDRESS, TRANSMISSION (AHEN = 1)

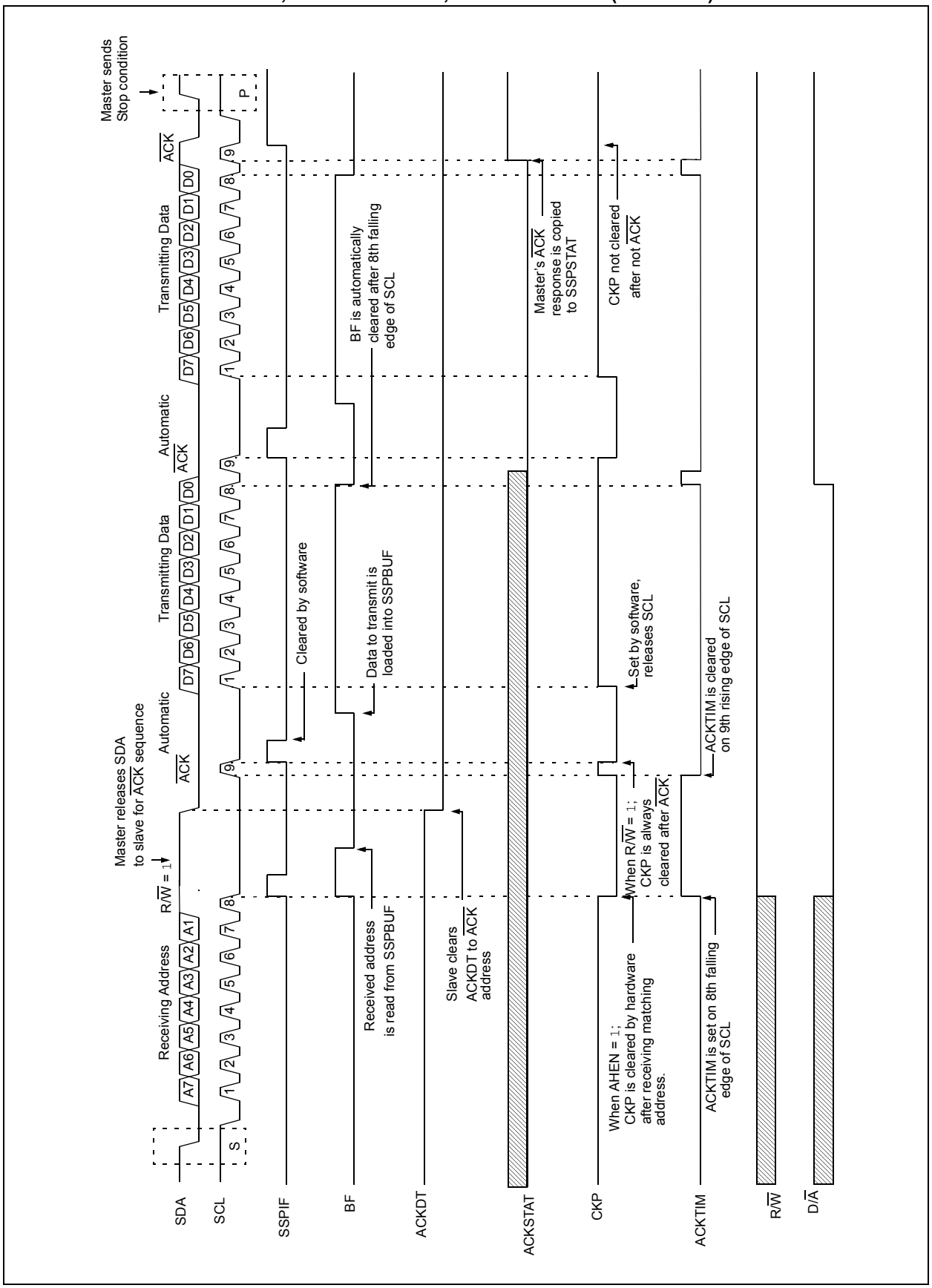

 © 2012 Microchip Technology Inc.

22.5.4 SLAVE MODE 10-BIT ADDRESS RECEPTION

This section describes a standard sequence of events for the MSSP module configured as an I^2C slave in 10-bit Addressing mode.

Figure 22-20 is used as a visual reference for this description.

This is a step by step process of what must be done by slave software to accomplish I^2C communication.

1. Bus starts Idle.
2. Master sends Start condition; S bit of SSPSTAT is set; SSPIF is set if interrupt on Start detect is enabled.
3. Master sends matching high address with R/$\overline{W}$ bit clear; UA bit of the SSPSTAT register is set.
4. Slave sends $\overline{ACK}$ and SSPIF is set.
5. Software clears the SSPIF bit.
6. Software reads received address from SSPBUF clearing the BF flag.
7. Slave loads low address into SSPADD, releasing SCL.
8. Master sends matching low address byte to the slave; UA bit is set.

> **Note:** Updates to the SSPADD register are not allowed until after the $\overline{ACK}$ sequence.

9. Slave sends $\overline{ACK}$ and SSPIF is set.

> **Note:** If the low address does not match, SSPIF and UA are still set so that the slave software can set SSPADD back to the high address. BF is not set because there is no match. CKP is unaffected.

10. Slave clears SSPIF.
11. Slave reads the received matching address from SSPBUF clearing BF.
12. Slave loads high address into SSPADD.
13. Master clocks a data byte to the slave and clocks out the slaves $\overline{ACK}$ on the 9th SCL pulse; SSPIF is set.
14. If SEN bit of SSPCON2 is set, CKP is cleared by hardware and the clock is stretched.
15. Slave clears SSPIF.
16. Slave reads the received byte from SSPBUF clearing BF.
17. If SEN is set the slave sets CKP to release the SCL.
18. Steps 13-17 repeat for each received byte.
19. Master sends Stop to end the transmission.

22.5.5 10-BIT ADDRESSING WITH ADDRESS OR DATA HOLD

Reception using 10-bit addressing with AHEN or DHEN set is the same as with 7-bit modes. The only difference is the need to update the SSPADD register using the UA bit. All functionality, specifically when the CKP bit is cleared and SCL line is held low are the same. Figure 22-21 can be used as a reference of a slave in 10-bit addressing with AHEN set.

Figure 22-22 shows a standard waveform for a slave transmitter in 10-bit Addressing mode.

FIGURE 22-20: I²C SLAVE, 10-BIT ADDRESS, RECEPTION (SEN = 1, AHEN = 0, DHEN = 0)

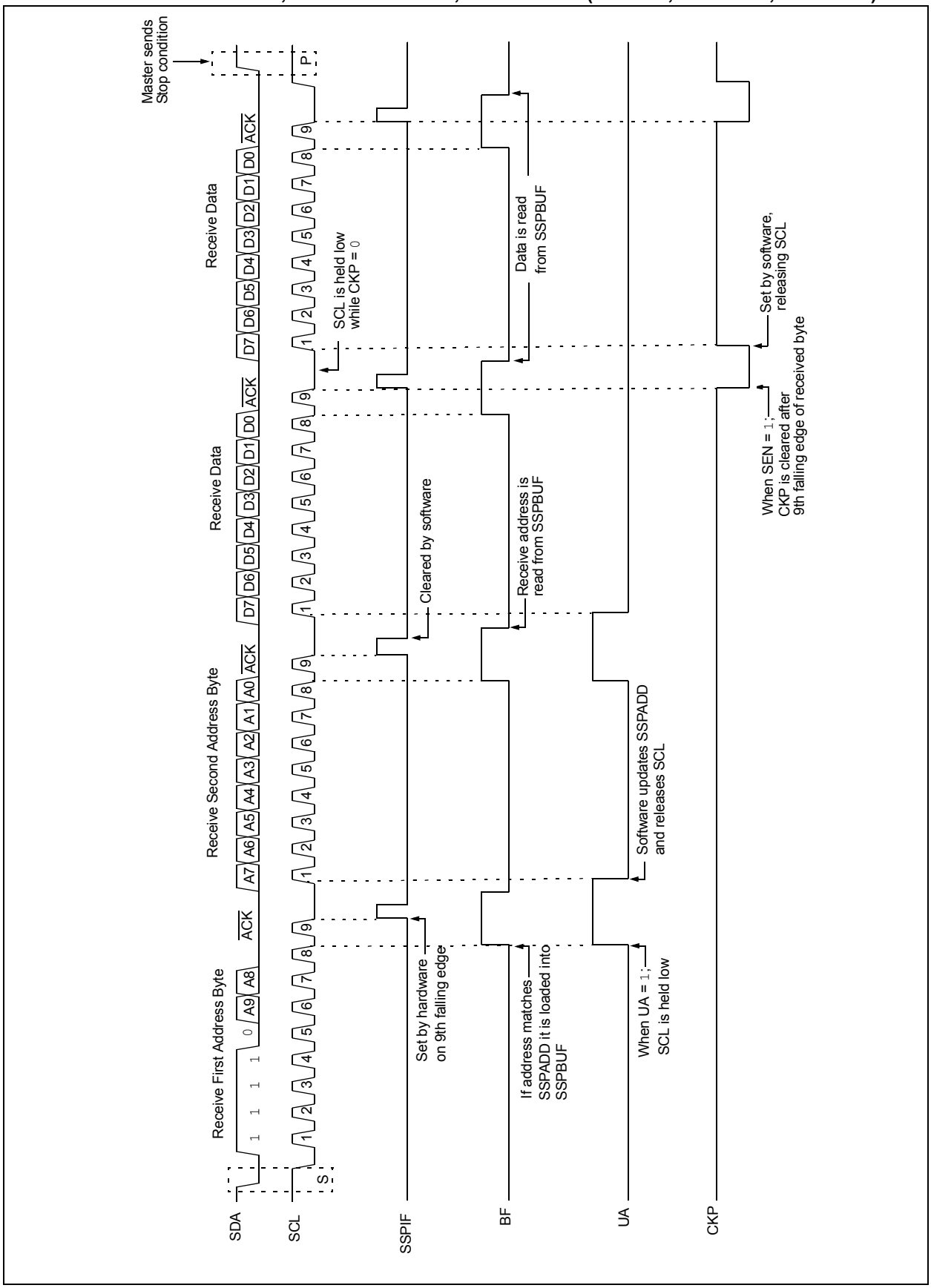

 © 2012 Microchip Technology Inc.

FIGURE 22-21: I²C SLAVE, 10-BIT ADDRESS, RECEPTION (SEN = 0, AHEN = 1, DHEN = 0)

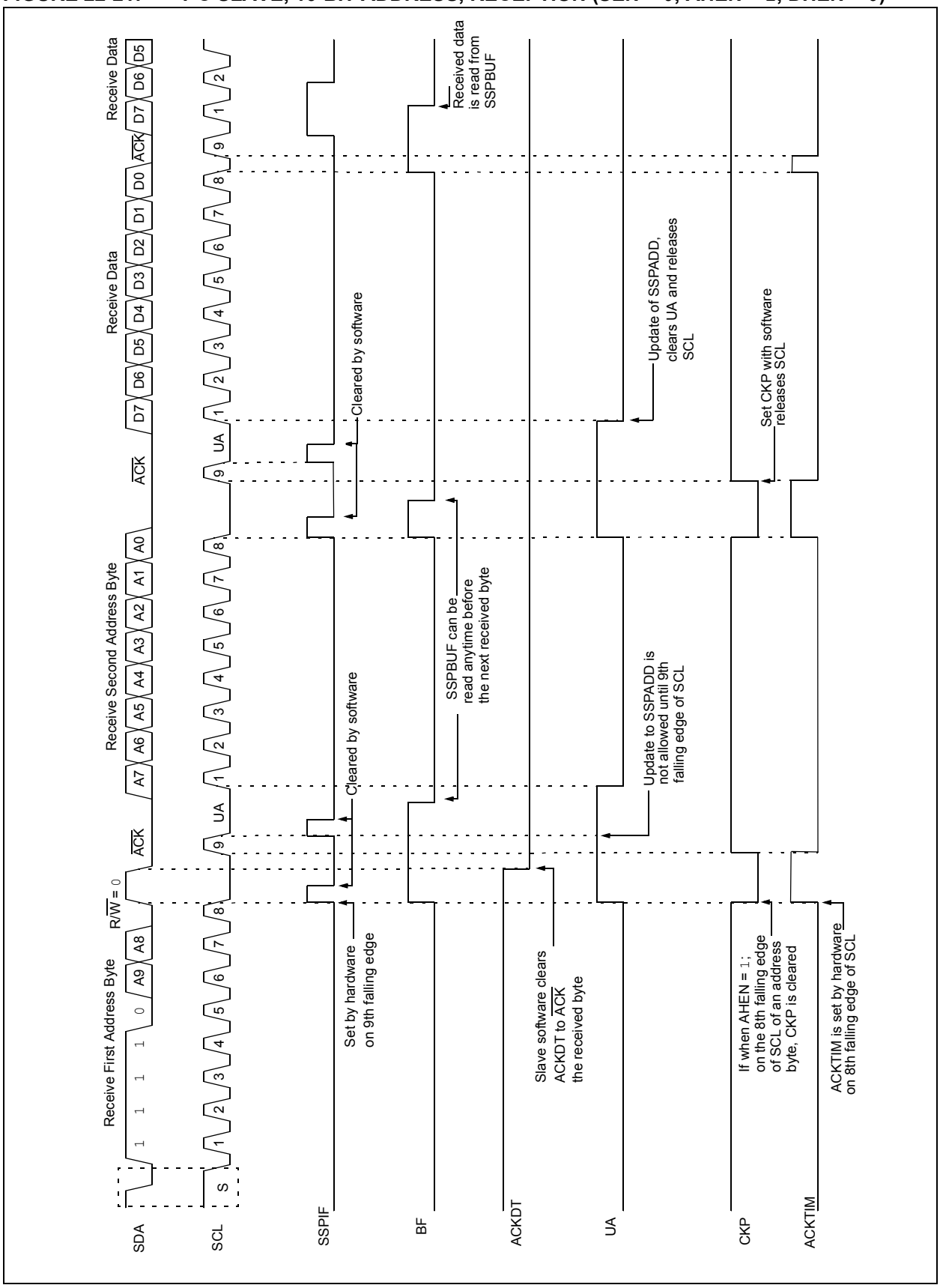

FIGURE 22-22: I²C SLAVE, 10-BIT ADDRESS, TRANSMISSION (SEN = 0, AHEN = 0, DHEN = 0)

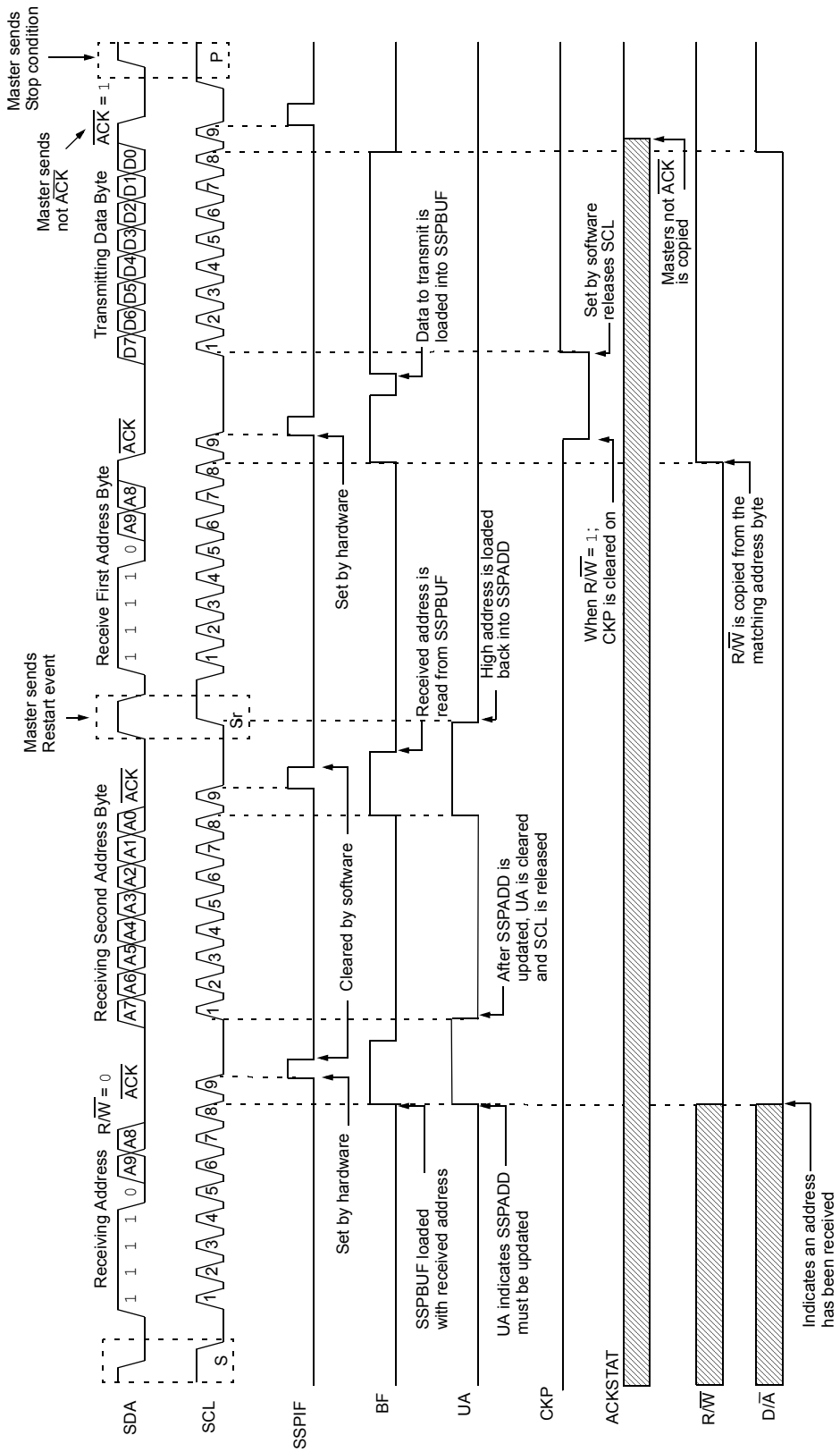

 © 2012 Microchip Technology Inc.

22.5.6 CLOCK STRETCHING

Clock stretching occurs when a device on the bus holds the SCL line low effectively pausing communication. The slave may stretch the clock to allow more time to handle data or prepare a response for the master device. A master device is not concerned with stretching as anytime it is active on the bus and not transferring data it is stretching. Any stretching done by a slave is invisible to the master software and handled by the hardware that generates SCL.

The CKP bit of the SSPCON1 register is used to control stretching in software. Any time the CKP bit is cleared, the module will wait for the SCL line to go low and then hold it. Setting CKP will release SCL and allow more communication.

22.5.6.1 Normal Clock Stretching

Following an $\overline{\text{ACK}}$ if the R/$\overline{\text{W}}$ bit of SSPSTAT is set, a read request, the slave hardware will clear CKP. This allows the slave time to update SSPBUF with data to transfer to the master. If the SEN bit of SSPCON2 is set, the slave hardware will always stretch the clock after the $\overline{\text{ACK}}$ sequence. Once the slave is ready; CKP is set by software and communication resumes.

> **Note 1:** The BF bit has no effect on if the clock will be stretched or not. This is different than previous versions of the module that would not stretch the clock, clear CKP, if SSPBUF was read before the 9th falling edge of SCL.
>
> **2:** Previous versions of the module did not stretch the clock for a transmission if SSPBUF was loaded before the 9th falling edge of SCL. It is now always cleared for read requests.

22.5.6.2 10-bit Addressing Mode

In 10-bit Addressing mode, when the UA bit is set the clock is always stretched. This is the only time, the SCL is stretched without CKP being cleared. SCL is released immediately after a write to SSPADD.

> **Note:** Previous versions of the module did not stretch the clock if the second address byte did not match.

22.5.6.3 Byte NACKing

When AHEN bit of SSPCON3 is set; CKP is cleared by hardware after the 8th falling edge of SCL for a received matching address byte. When DHEN bit of SSPCON3 is set; CKP is cleared after the 8th falling edge of SCL for received data.

Stretching after the 8th falling edge of SCL allows the slave to look at the received address or data and decide if it wants to ACK the received data.

22.5.7 CLOCK SYNCHRONIZATION AND THE CKP BIT

Any time the CKP bit is cleared, the module will wait for the SCL line to go low and then hold it. However, clearing the CKP bit will not assert the SCL output low until the SCL output is already sampled low. Therefore, the CKP bit will not assert the SCL line until an external I^2C master device has already asserted the SCL line. The SCL output will remain low until the CKP bit is set and all other devices on the I^2C bus have released SCL. This ensures that a write to the CKP bit will not violate the minimum high time requirement for SCL (see Figure 22-23).

FIGURE 22-23: CLOCK SYNCHRONIZATION TIMING

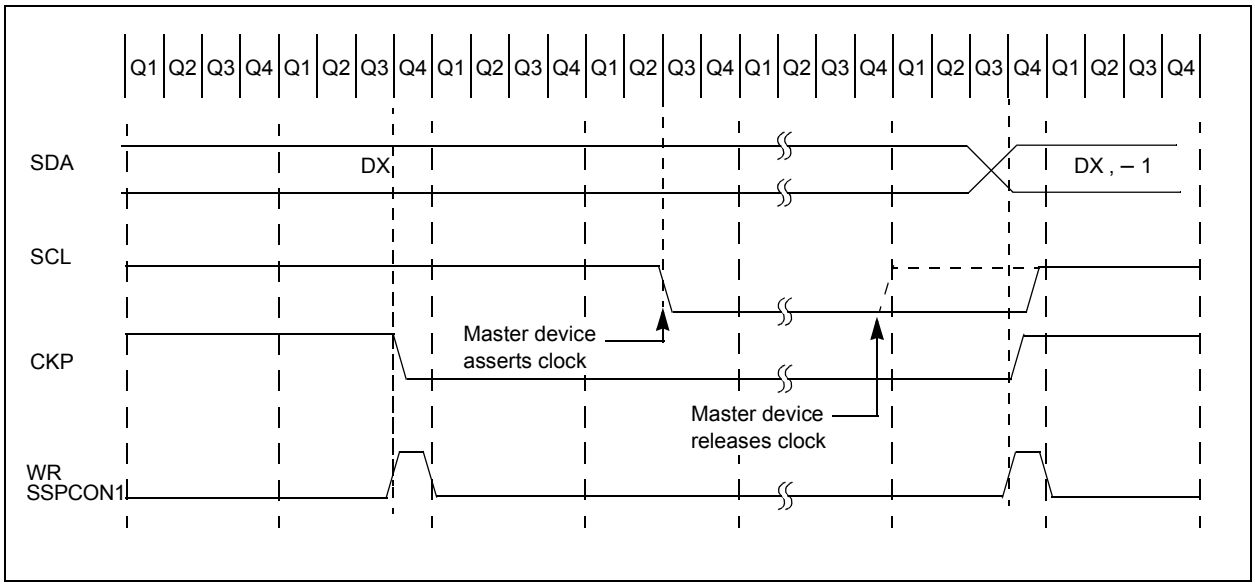

22.5.8 GENERAL CALL ADDRESS SUPPORT

The addressing procedure for the I^{2}C bus is such that the first byte after the Start condition usually determines which device will be the slave addressed by the master device. The exception is the general call address which can address all devices. When this address is used, all devices should, in theory, respond with an acknowledge.

The general call address is a reserved address in the I^{2}C protocol, defined as address 0x00. When the GCEN bit of the SSPCON2 register is set, the slave module will automatically $\overline{\text{ACK}}$ the reception of this address regardless of the value stored in SSPADD. After the slave clocks in an address of all zeros with the R/$\overline{\text{W}}$ bit clear, an interrupt is generated and slave software can read SSPBUF and respond. Figure 22-24 shows a general call reception sequence.

In 10-bit Address mode, the UA bit will not be set on the reception of the general call address. The slave will prepare to receive the second byte as data, just as it would in 7-bit mode.

If the AHEN bit of the SSPCON3 register is set, just as with any other address reception, the slave hardware will stretch the clock after the 8th falling edge of SCL. The slave must then set its ACKDT value and release the clock with communication progressing as it would normally.

FIGURE 22-24: SLAVE MODE GENERAL CALL ADDRESS SEQUENCE

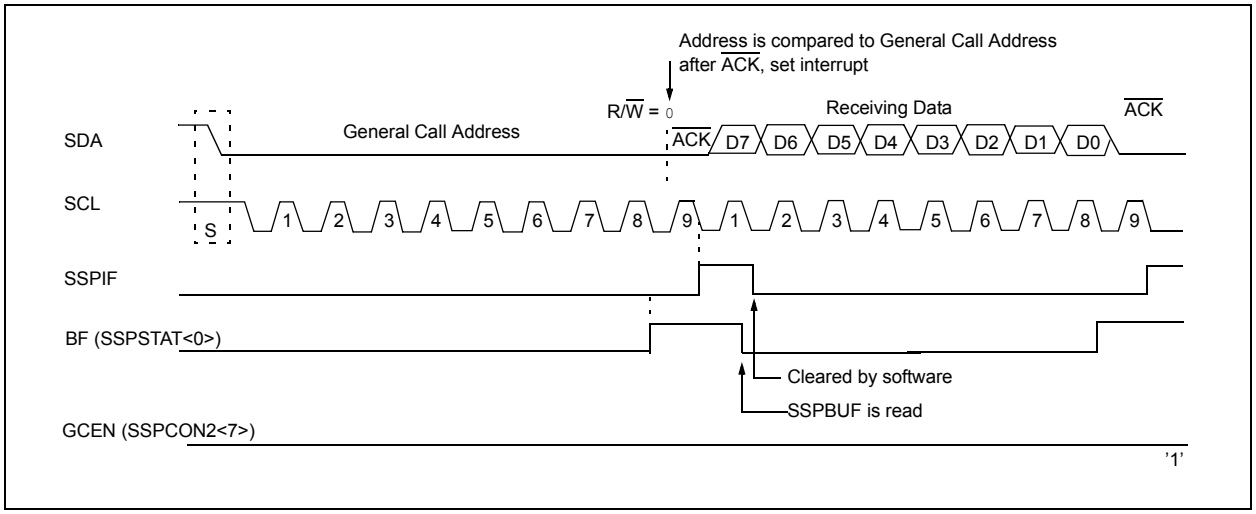

22.5.9 SSP MASK REGISTER

An SSP Mask (SSPMSK) register (Register 22-5) is available in I^{2}C Slave mode as a mask for the value held in the SSPSR register during an address comparison operation. A zero ('0') bit in the SSPMSK register has the effect of making the corresponding bit of the received address a "don't care".

This register is reset to all '1's upon any Reset condition and, therefore, has no effect on standard SSP operation until written with a mask value.

The SSP Mask register is active during:

- 7-bit Address mode: address compare of A<7:1>.
- 10-bit Address mode: address compare of A<7:0> only. The SSP mask has no effect during the reception of the first (high) byte of the address.

 © 2012 Microchip Technology Inc.

22.6 I²C MASTER MODE

Master mode is enabled by setting and clearing the appropriate SSPM bits in the SSPCON1 register and by setting the SSPEN bit. In Master mode, the SDA and SCK pins must be configured as inputs. The MSSP peripheral hardware will override the output driver TRIS controls when necessary to drive the pins low.

Master mode of operation is supported by interrupt generation on the detection of the Start and Stop conditions. The Stop (P) and Start (S) bits are cleared from a Reset or when the MSSP module is disabled. Control of the I²C bus may be taken when the P bit is set, or the bus is Idle.

In Firmware Controlled Master mode, user code conducts all I²C bus operations based on Start and Stop bit condition detection. Start and Stop condition detection is the only active circuitry in this mode. All other communication is done by the user software directly manipulating the SDA and SCL lines.

The following events will cause the SSP Interrupt Flag bit, SSPIF, to be set (SSP interrupt, if enabled):

- Start condition detected
- Stop condition detected
- Data transfer byte transmitted/received
- Acknowledge transmitted/received
- Repeated Start generated

Note 1: The MSSP module, when configured in I²C Master mode, does not allow queueing of events. For instance, the user is not allowed to initiate a Start condition and immediately write the SSPBUF register to initiate transmission before the Start condition is complete. In this case, the SSPBUF will not be written to and the WCOL bit will be set, indicating that a write to the SSPBUF did not occur

2: When in Master mode, Start/Stop detection is masked and an interrupt is generated when the SEN/PEN bit is cleared and the generation is complete.

22.6.1 I²C MASTER MODE OPERATION

The master device generates all of the serial clock pulses and the Start and Stop conditions. A transfer is ended with a Stop condition or with a Repeated Start condition. Since the Repeated Start condition is also the beginning of the next serial transfer, the I²C bus will not be released.

In Master Transmitter mode, serial data is output through SDA, while SCL outputs the serial clock. The first byte transmitted contains the slave address of the receiving device (7 bits) and the Read/Write (R/$\overline{W}$) bit. In this case, the R/$\overline{W}$ bit will be logic ‘0’. Serial data is transmitted eight bits at a time. After each byte is transmitted, an Acknowledge bit is received. Start and Stop conditions are output to indicate the beginning and the end of a serial transfer.

In Master Receive mode, the first byte transmitted contains the slave address of the transmitting device (7 bits) and the R/$\overline{W}$ bit. In this case, the R/$\overline{W}$ bit will be logic ‘1’. Thus, the first byte transmitted is a 7-bit slave address followed by a ‘1’ to indicate the receive bit. Serial data is received via SDA, while SCL outputs the serial clock. Serial data is received eight bits at a time. After each byte is received, an Acknowledge bit is transmitted. Start and Stop conditions indicate the beginning and end of transmission.

A Baud Rate Generator is used to set the clock frequency output on SCL. See **Section 22.7 “Baud Rate Generator”** for more detail.

22.6.2 CLOCK ARBITRATION

Clock arbitration occurs when the master, during any receive, transmit or Repeated Start/Stop condition, releases the SCL pin (SCL allowed to float high). When the SCL pin is allowed to float high, the Baud Rate Generator (BRG) is suspended from counting until the SCL pin is actually sampled high. When the SCL pin is sampled high, the Baud Rate Generator is reloaded with the contents of SSPADD<7:0> and begins counting. This ensures that the SCL high time will always be at least one BRG rollover count in the event that the clock is held low by an external device (Figure 22-25).

FIGURE 22-25: BAUD RATE GENERATOR TIMING WITH CLOCK ARBITRATION

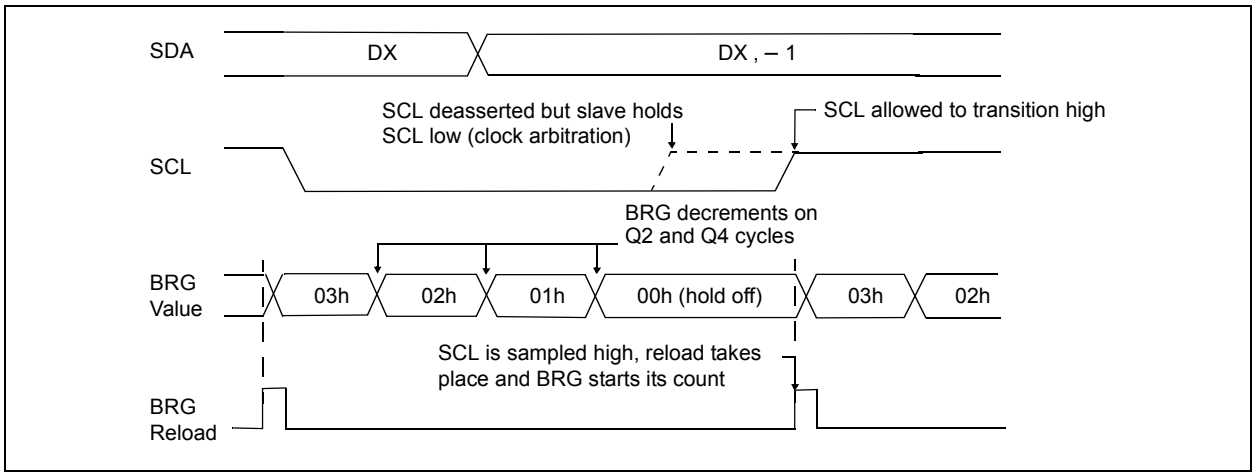

22.6.3 WCOL STATUS FLAG

If the user writes the SSPBUF when a Start, Restart, Stop, Receive or Transmit sequence is in progress, the WCOL is set and the contents of the buffer are unchanged (the write does not occur). Any time the WCOL bit is set it indicates that an action on SSPBUF was attempted while the module was not idle.

Note:	Because queueing of events is not allowed, writing to the lower five bits of SSPCON2 is disabled until the Start condition is complete.

 © 2012 Microchip Technology Inc.

22.6.4 I²C MASTER MODE START CONDITION TIMING

To initiate a Start condition (Figure 22-26), the user sets the Start Enable bit, SEN bit of the SSPCON2 register. If the SDA and SCL pins are sampled high, the Baud Rate Generator is reloaded with the contents of SSPADD<7:0> and starts its count. If SCL and SDA are both sampled high when the Baud Rate Generator times out (TBRG), the SDA pin is driven low. The action of the SDA being driven low while SCL is high is the Start condition and causes the S bit of the SSPSTAT1 register to be set. Following this, the Baud Rate Generator is reloaded with the contents of SSPADD<7:0> and resumes its count. When the Baud Rate Generator times out (TBRG), the SEN bit of the SSPCON2 register will be automatically cleared by hardware; the Baud Rate Generator is suspended, leaving the SDA line held low and the Start condition is complete.

Note 1: If at the beginning of the Start condition, the SDA and SCL pins are already sampled low, or if during the Start condition, the SCL line is sampled low before the SDA line is driven low, a bus collision occurs, the Bus Collision Interrupt Flag, BCLIF, is set, the Start condition is aborted and the I²C module is reset into its Idle state.

2: The Philips I²C™ Specification states that a bus collision cannot occur on a Start.

FIGURE 22-26: FIRST START BIT TIMING

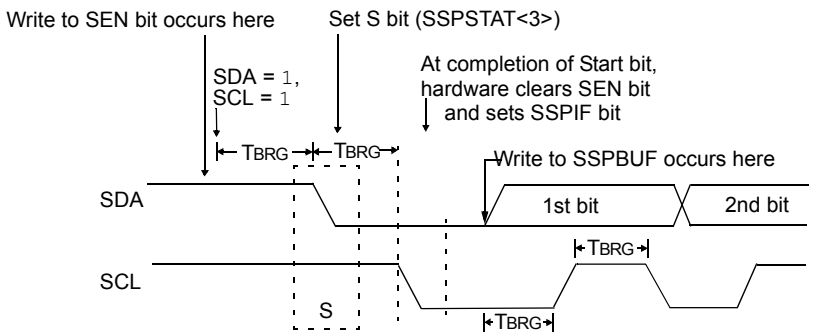

22.6.5 I²C MASTER MODE REPEATED START CONDITION TIMING

A Repeated Start condition (Figure 22-27) occurs when the RSEN bit of the SSPCON2 register is programmed high and the Master state machine is no longer active. When the RSEN bit is set, the SCL pin is asserted low. When the SCL pin is sampled low, the Baud Rate Generator is loaded and begins counting. The SDA pin is released (brought high) for one Baud Rate Generator count (TBRG). When the Baud Rate Generator times out, if SDA is sampled high, the SCL pin will be deasserted (brought high). When SCL is sampled high, the Baud Rate Generator is reloaded and begins counting. SDA and SCL must be sampled high for one TBRG. This action is then followed by assertion of the SDA pin (SDA = 0) for one TBRG while SCL is high. SCL is asserted low. Following this, the RSEN bit of the SSPCON2 register will be automatically cleared and the Baud Rate Generator will not be reloaded, leaving the SDA pin held low. As soon as a Start condition is detected on the SDA and SCL pins, the S bit of the SSPSTAT register will be set. The SSPIF bit will not be set until the Baud Rate Generator has timed out.

Note 1: If RSEN is programmed while any other event is in progress, it will not take effect.

2: A bus collision during the Repeated Start condition occurs if:

- SDA is sampled low when SCL goes from low-to-high.
- SCL goes low before SDA is asserted low. This may indicate that another master is attempting to transmit a data '1'.

FIGURE 22-27: REPEAT START CONDITION WAVEFORM

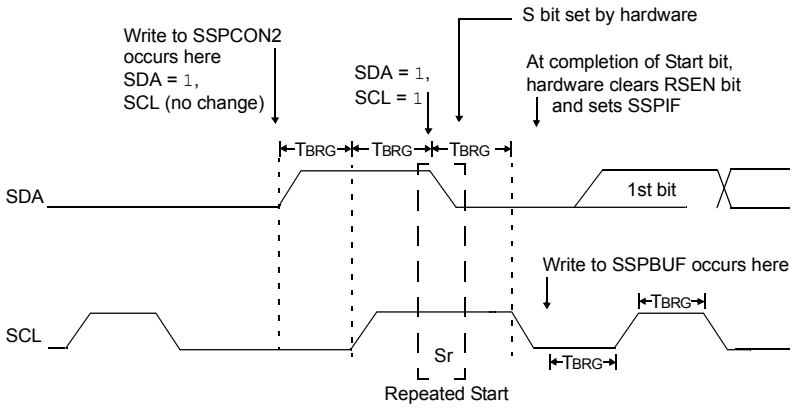

 © 2012 Microchip Technology Inc.

22.6.6 I²C MASTER MODE TRANSMISSION

Transmission of a data byte, a 7-bit address or the other half of a 10-bit address is accomplished by simply writing a value to the SSPBUF register. This action will set the Buffer Full flag bit, BF and allow the Baud Rate Generator to begin counting and start the next transmission. Each bit of address/data will be shifted out onto the SDA pin after the falling edge of SCL is asserted. SCL is held low for one Baud Rate Generator rollover count (TBRG). Data should be valid before SCL is released high. When the SCL pin is released high, it is held that way for TBRG. The data on the SDA pin must remain stable for that duration and some hold time after the next falling edge of SCL. After the eighth bit is shifted out (the falling edge of the eighth clock), the BF flag is cleared and the master releases SDA. This allows the slave device being addressed to respond with an $\overline{ACK}$ bit during the ninth bit time if an address match occurred, or if data was received properly. The status of $\overline{ACK}$ is written into the ACKSTAT bit on the rising edge of the ninth clock. If the master receives an Acknowledge, the Acknowledge Status bit, ACKSTAT, is cleared. If not, the bit is set. After the ninth clock, the SSPIF bit is set and the master clock (Baud Rate Generator) is suspended until the next data byte is loaded into the SSPBUF, leaving SCL low and SDA unchanged (Figure 22-28).

After the write to the SSPBUF, each bit of the address will be shifted out on the falling edge of SCL until all seven address bits and the R/$\overline{W}$ bit are completed. On the falling edge of the eighth clock, the master will release the SDA pin, allowing the slave to respond with an Acknowledge. On the falling edge of the ninth clock, the master will sample the SDA pin to see if the address was recognized by a slave. The status of the $\overline{ACK}$ bit is loaded into the ACKSTAT Status bit of the SSPCON2 register. Following the falling edge of the ninth clock transmission of the address, the SSPIF is set, the BF flag is cleared and the Baud Rate Generator is turned off until another write to the SSPBUF takes place, holding SCL low and allowing SDA to float.

22.6.6.1 BF Status Flag

In Transmit mode, the BF bit of the SSPSTAT register is set when the CPU writes to SSPBUF and is cleared when all eight bits are shifted out.

22.6.6.2 WCOL Status Flag

If the user writes the SSPBUF when a transmit is already in progress (i.e., SSPSR is still shifting out a data byte), the WCOL is set and the contents of the buffer are unchanged (the write does not occur).

WCOL must be cleared by software before the next transmission.

22.6.6.3 ACKSTAT Status Flag

In Transmit mode, the ACKSTAT bit of the SSPCON2 register is cleared when the slave has sent an Acknowledge ($\overline{ACK}$ = 0) and is set when the slave does not Acknowledge ($\overline{ACK}$ = 1). A slave sends an Acknowledge when it has recognized its address (including a general call), or when the slave has properly received its data.

22.6.6.4 Typical transmit sequence:

1. The user generates a Start condition by setting the SEN bit of the SSPCON2 register.
2. SSPIF is set by hardware on completion of the Start.
3. SSPIF is cleared by software.
4. The MSSP module will wait the required start time before any other operation takes place.
5. The user loads the SSPBUF with the slave address to transmit.
6. Address is shifted out the SDA pin until all eight bits are transmitted. Transmission begins as soon as SSPBUF is written to.
7. The MSSP module shifts in the $\overline{ACK}$ bit from the slave device and writes its value into the ACKSTAT bit of the SSPCON2 register.
8. The MSSP module generates an interrupt at the end of the ninth clock cycle by setting the SSPIF bit.
9. The user loads the SSPBUF with eight bits of data.
10. Data is shifted out the SDA pin until all eight bits are transmitted.
11. The MSSP module shifts in the $\overline{ACK}$ bit from the slave device and writes its value into the ACKSTAT bit of the SSPCON2 register.
12. Steps 8-11 are repeated for all transmitted data bytes.
13. The user generates a Stop or Restart condition by setting the PEN or RSEN bits of the SSPCON2 register. Interrupt is generated once the Stop/Restart condition is complete.

FIGURE 22-28: I²C MASTER MODE WAVEFORM (TRANSMISSION, 7 OR 10-BIT ADDRESS)

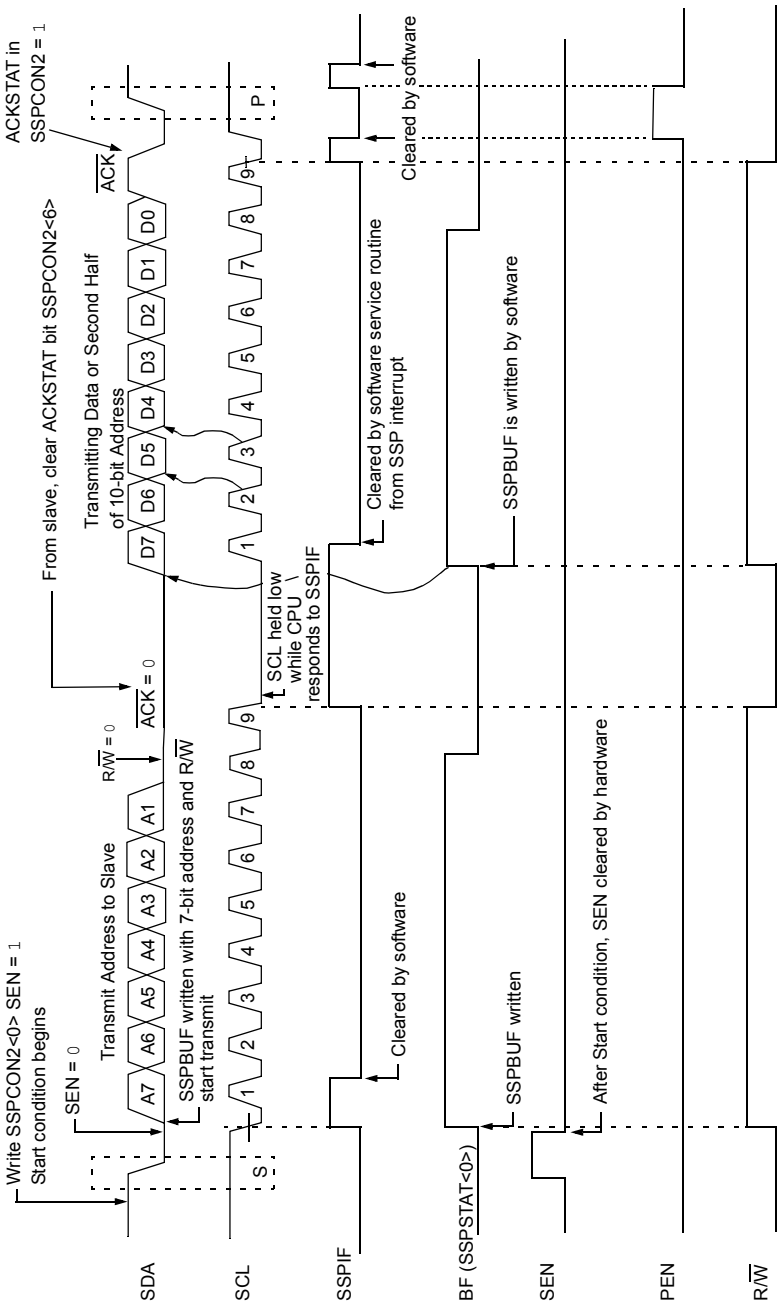

 © 2012 Microchip Technology Inc.

22.6.7 I²C MASTER MODE RECEPTION

Master mode reception (Figure 22-29) is enabled by programming the Receive Enable bit, RCEN bit of the SSPCON2 register.

> **Note:** The MSSP module must be in an Idle state before the RCEN bit is set or the RCEN bit will be disregarded.

The Baud Rate Generator begins counting and on each rollover, the state of the SCL pin changes (high-to-low/low-to-high) and data is shifted into the SSPSR. After the falling edge of the eighth clock, the receive enable flag is automatically cleared, the contents of the SSPSR are loaded into the SSPBUF, the BF flag bit is set, the SSPIF flag bit is set and the Baud Rate Generator is suspended from counting, holding SCL low. The MSSP is now in Idle state awaiting the next command. When the buffer is read by the CPU, the BF flag bit is automatically cleared. The user can then send an Acknowledge bit at the end of reception by setting the Acknowledge Sequence Enable, ACKEN bit of the SSPCON2 register.

22.6.7.1 BF Status Flag

In receive operation, the BF bit is set when an address or data byte is loaded into SSPBUF from SSPSR. It is cleared when the SSPBUF register is read.

22.6.7.2 SSPOV Status Flag

In receive operation, the SSPOV bit is set when eight bits are received into the SSPSR and the BF flag bit is already set from a previous reception.

22.6.7.3 WCOL Status Flag

If the user writes the SSPBUF when a receive is already in progress (i.e., SSPSR is still shifting in a data byte), the WCOL bit is set and the contents of the buffer are unchanged (the write does not occur).

22.6.7.4 Typical Receive Sequence:

1. The user generates a Start condition by setting the SEN bit of the SSPCON2 register.
2. SSPIF is set by hardware on completion of the Start.
3. SSPIF is cleared by software.
4. User writes SSPBUF with the slave address to transmit and the R/$\overline{W}$ bit set.
5. Address is shifted out the SDA pin until all eight bits are transmitted. Transmission begins as soon as SSPBUF is written to.
6. The MSSP module shifts in the $\overline{ACK}$ bit from the slave device and writes its value into the ACKSTAT bit of the SSPCON2 register.
7. The MSSP module generates an interrupt at the end of the ninth clock cycle by setting the SSPIF bit.
8. User sets the RCEN bit of the SSPCON2 register and the master clocks in a byte from the slave.
9. After the 8th falling edge of SCL, SSPIF and BF are set.
10. Master clears SSPIF and reads the received byte from SSPUF, clears BF.
11. Master sets $\overline{ACK}$ value sent to slave in ACKDT bit of the SSPCON2 register and initiates the $\overline{ACK}$ by setting the ACKEN bit.
12. Masters $\overline{ACK}$ is clocked out to the slave and SSPIF is set.
13. User clears SSPIF.
14. Steps 8-13 are repeated for each received byte from the slave.
15. Master sends a not $\overline{ACK}$ or Stop to end communication.

FIGURE 22-29: I²C MASTER MODE WAVEFORM (RECEPTION, 7-BIT ADDRESS)

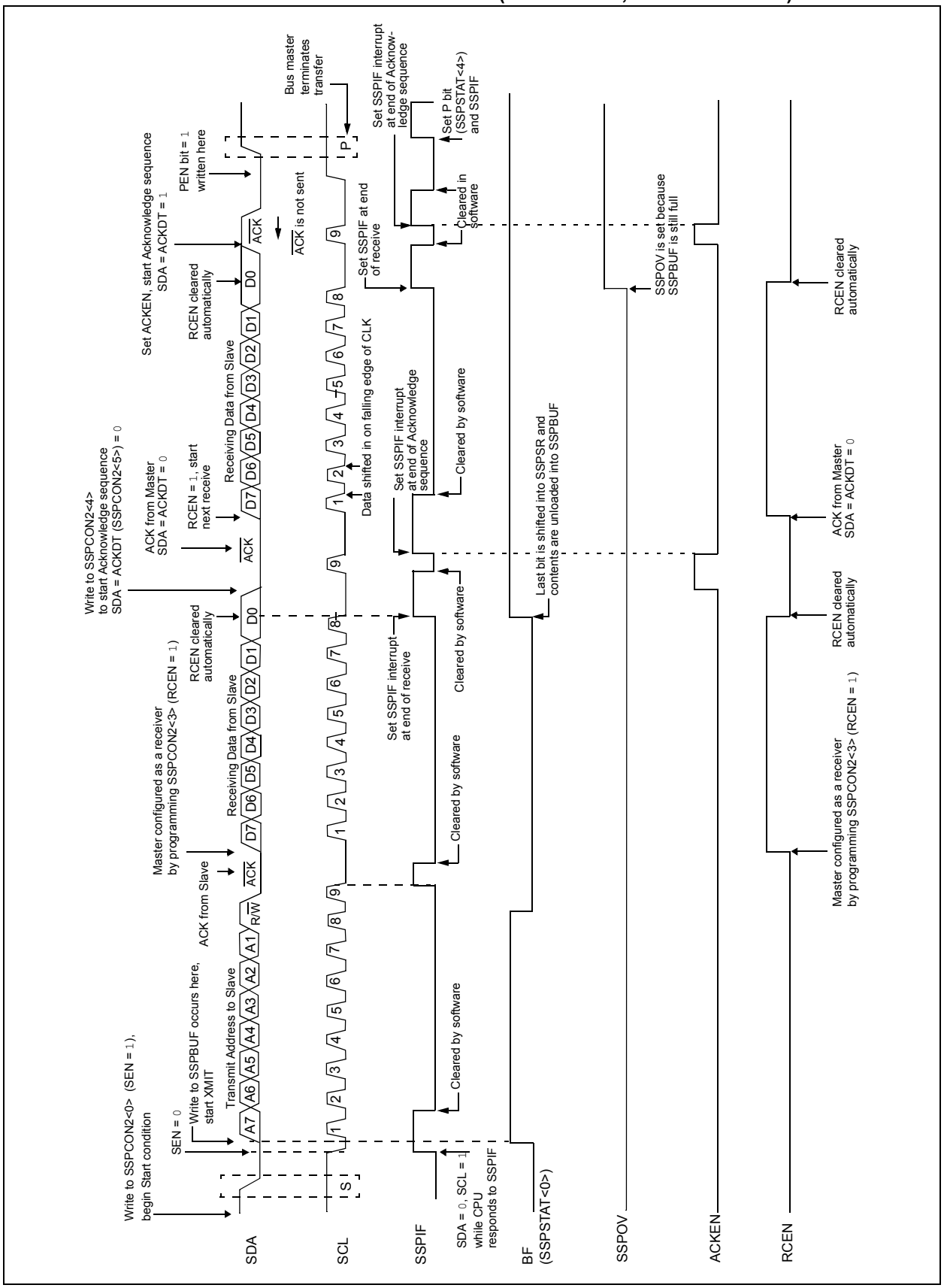

 © 2012 Microchip Technology Inc.

22.6.8 ACKNOWLEDGE SEQUENCE TIMING

An Acknowledge sequence is enabled by setting the Acknowledge Sequence Enable bit, ACKEN bit of the SSPCON2 register. When this bit is set, the SCL pin is pulled low and the contents of the Acknowledge data bit are presented on the SDA pin. If the user wishes to generate an Acknowledge, then the ACKDT bit should be cleared. If not, the user should set the ACKDT bit before starting an Acknowledge sequence. The Baud Rate Generator then counts for one rollover period (TBRG) and the SCL pin is deasserted (pulled high). When the SCL pin is sampled high (clock arbitration), the Baud Rate Generator counts for TBRG. The SCL pin is then pulled low. Following this, the ACKEN bit is automatically cleared, the Baud Rate Generator is turned off and the MSSP module then goes into Idle mode (Figure 22-30).

22.6.8.1 WCOL Status Flag

If the user writes the SSPBUF when an Acknowledge sequence is in progress, then WCOL is set and the contents of the buffer are unchanged (the write does not occur).

22.6.9 STOP CONDITION TIMING

A Stop bit is asserted on the SDA pin at the end of a receive/transmit by setting the Stop Sequence Enable bit, PEN bit of the SSPCON2 register. At the end of a receive/transmit, the SCL line is held low after the falling edge of the ninth clock. When the PEN bit is set, the master will assert the SDA line low. When the SDA line is sampled low, the Baud Rate Generator is reloaded and counts down to '0'. When the Baud Rate Generator times out, the SCL pin will be brought high and one TBRG (Baud Rate Generator rollover count) later, the SDA pin will be deasserted. When the SDA pin is sampled high while SCL is high, the P bit of the SSPSTAT register is set. A TBRG later, the PEN bit is cleared and the SSPIF bit is set (Figure 22-31).

22.6.9.1 WCOL Status Flag

If the user writes the SSPBUF when a Stop sequence is in progress, then the WCOL bit is set and the contents of the buffer are unchanged (the write does not occur).

FIGURE 22-30: ACKNOWLEDGE SEQUENCE WAVEFORM

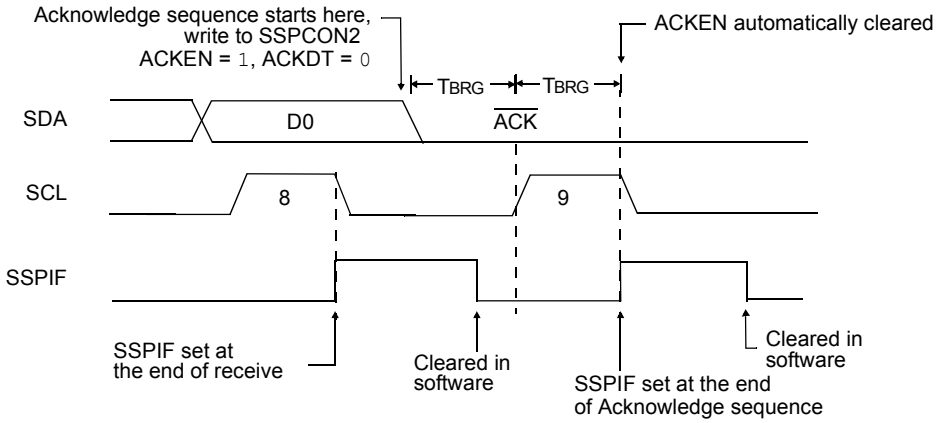

Note: TBRG = one Baud Rate Generator period.

FIGURE 22-31: STOP CONDITION RECEIVE OR TRANSMIT MODE

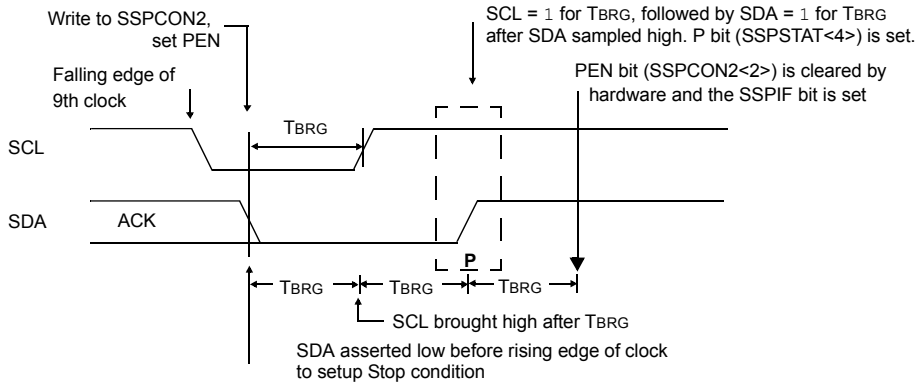

Note: TBRG = one Baud Rate Generator period.

22.6.10 SLEEP OPERATION

While in Sleep mode, the I^{2}C slave module can receive addresses or data and when an address match or complete byte transfer occurs, wake the processor from Sleep (if the MSSP interrupt is enabled).

22.6.11 EFFECTS OF A RESET

A Reset disables the MSSP module and terminates the current transfer.

22.6.12 MULTI-MASTER MODE

In Multi-Master mode, the interrupt generation on the detection of the Start and Stop conditions allows the determination of when the bus is free. The Stop (P) and Start (S) bits are cleared from a Reset or when the MSSP module is disabled. Control of the I^{2}C bus may be taken when the P bit of the SSPSTAT register is set, or the bus is Idle, with both the S and P bits clear. When the bus is busy, enabling the SSP interrupt will generate the interrupt when the Stop condition occurs.

In multi-master operation, the SDA line must be monitored for arbitration to see if the signal level is the expected output level. This check is performed by hardware with the result placed in the BCLIF bit.

The states where arbitration can be lost are:

- Address Transfer
- Data Transfer
- A Start Condition
- A Repeated Start Condition
- An Acknowledge Condition

22.6.13 MULTI -MASTER COMMUNICATION, BUS COLLISION AND BUS ARBITRATION

Multi-Master mode support is achieved by bus arbitration. When the master outputs address/data bits onto the SDA pin, arbitration takes place when the master outputs a '1' on SDA, by letting SDA float high and another master asserts a '0'. When the SCL pin floats high, data should be stable. If the expected data on SDA is a '1' and the data sampled on the SDA pin is '0', then a bus collision has taken place. The master will set the Bus Collision Interrupt Flag, BCLIF and reset the I^{2}C port to its Idle state (Figure 22-32).

If a transmit was in progress when the bus collision occurred, the transmission is halted, the BF flag is cleared, the SDA and SCL lines are deasserted and the SSPBUF can be written to. When the user services the bus collision Interrupt Service Routine and if the I^{2}C bus is free, the user can resume communication by asserting a Start condition.

If a Start, Repeated Start, Stop or Acknowledge condition was in progress when the bus collision occurred, the condition is aborted, the SDA and SCL lines are deasserted and the respective control bits in the SSPCON2 register are cleared. When the user services the bus collision Interrupt Service Routine and if the I^{2}C bus is free, the user can resume communication by asserting a Start condition.

The master will continue to monitor the SDA and SCL pins. If a Stop condition occurs, the SSPIF bit will be set.

A write to the SSPBUF will start the transmission of data at the first data bit, regardless of where the transmitter left off when the bus collision occurred.

In Multi-Master mode, the interrupt generation on the detection of Start and Stop conditions allows the determination of when the bus is free. Control of the I^{2}C bus can be taken when the P bit is set in the SSPSTAT register, or the bus is Idle and the S and P bits are cleared.

FIGURE 22-32: BUS COLLISION TIMING FOR TRANSMIT AND ACKNOWLEDGE

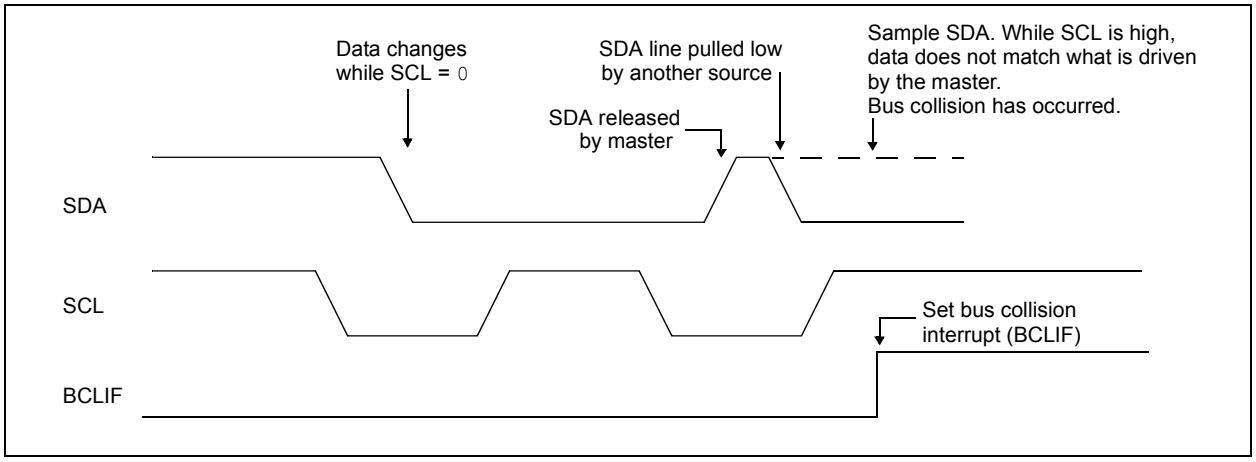

 © 2012 Microchip Technology Inc.

22.6.13.1 Bus Collision During a Start Condition

During a Start condition, a bus collision occurs if:

a) SDA or SCL are sampled low at the beginning of the Start condition (Figure 22-33).

b) SCL is sampled low before SDA is asserted low (Figure 22-34).

During a Start condition, both the SDA and the SCL pins are monitored.

If the SDA pin is already low, or the SCL pin is already low, then all of the following occur:

- the Start condition is aborted,
- the BCLIF flag is set and
- the MSSP module is reset to its Idle state (Figure 22-33).

The Start condition begins with the SDA and SCL pins deasserted. When the SDA pin is sampled high, the Baud Rate Generator is loaded and counts down. If the SCL pin is sampled low while SDA is high, a bus collision occurs because it is assumed that another master is attempting to drive a data '1' during the Start condition.

If the SDA pin is sampled low during this count, the BRG is reset and the SDA line is asserted early (Figure 22-35). If, however, a '1' is sampled on the SDA pin, the SDA pin is asserted low at the end of the BRG count. The Baud Rate Generator is then reloaded and counts down to zero; if the SCL pin is sampled as '0' during this time, a bus collision does not occur. At the end of the BRG count, the SCL pin is asserted low.

> **Note:** The reason that bus collision is not a factor during a Start condition is that no two bus masters can assert a Start condition at the exact same time. Therefore, one master will always assert SDA before the other. This condition does not cause a bus collision because the two masters must be allowed to arbitrate the first address following the Start condition. If the address is the same, arbitration must be allowed to continue into the data portion, Repeated Start or Stop conditions.

FIGURE 22-33: BUS COLLISION DURING START CONDITION (SDA ONLY)

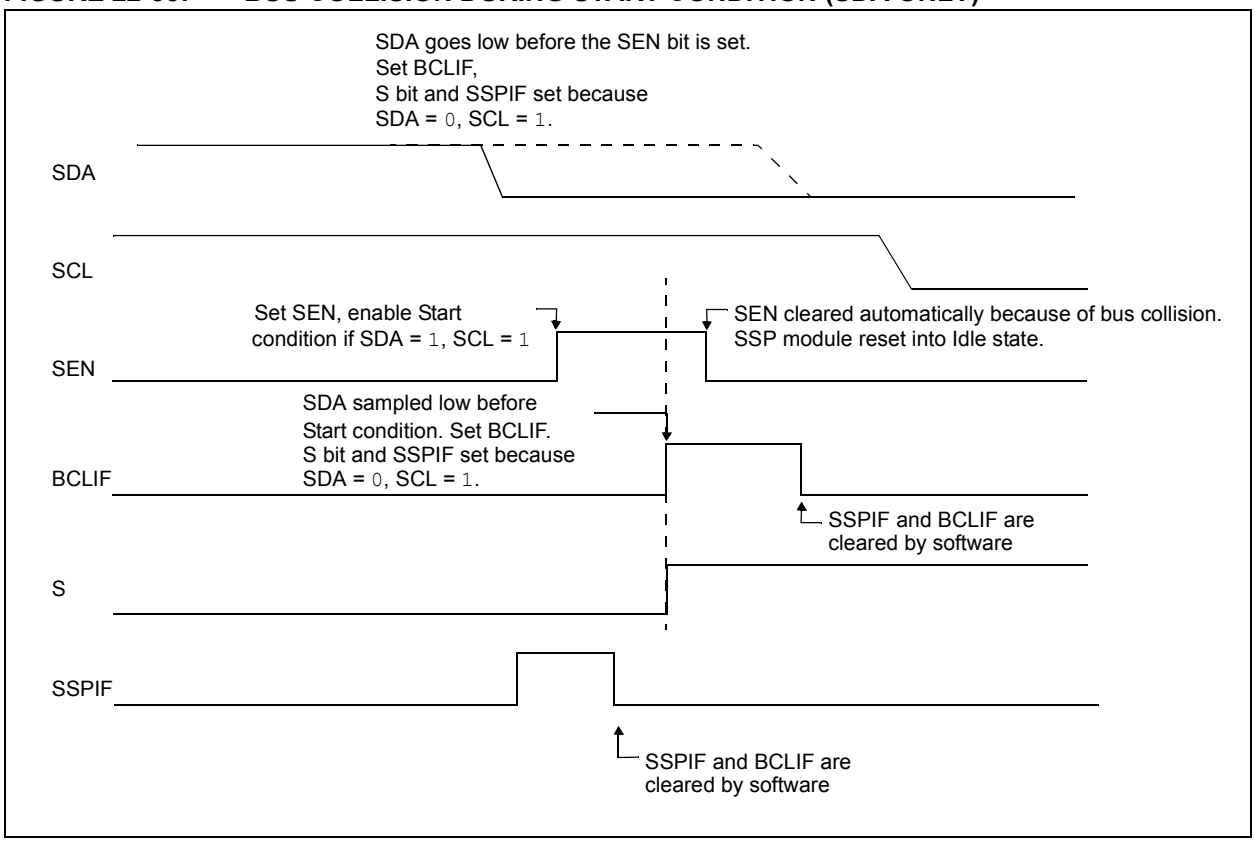

FIGURE 22-34: BUS COLLISION DURING START CONDITION (SCL = 0)

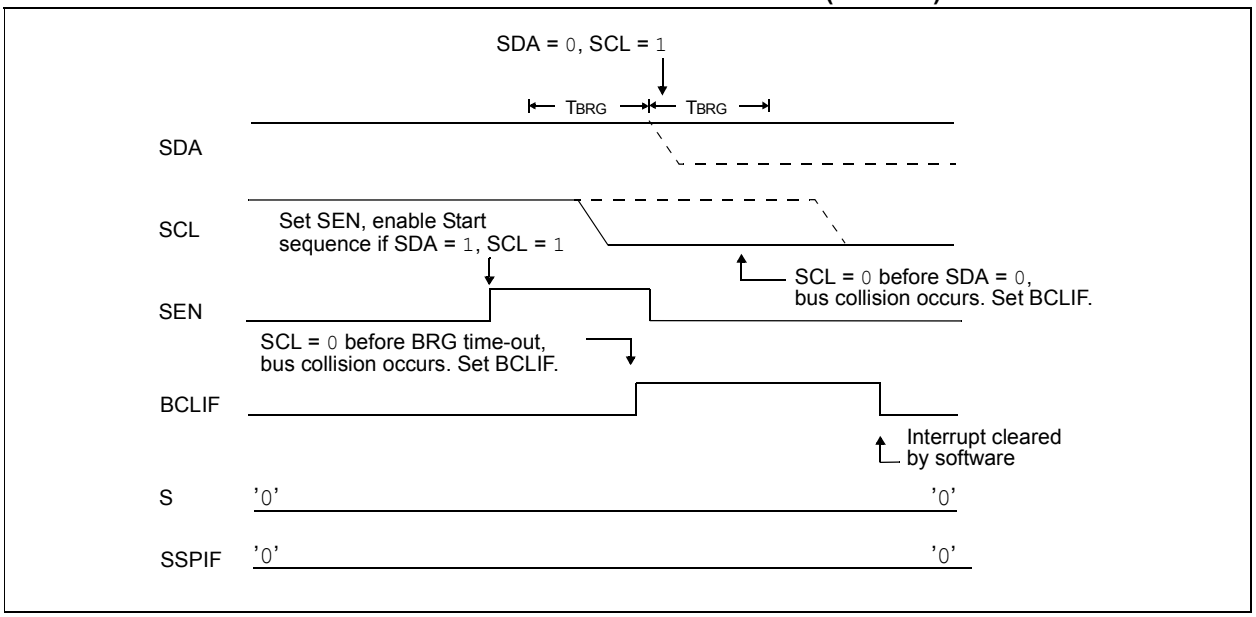

FIGURE 22-35: BRG RESET DUE TO SDA ARBITRATION DURING START CONDITION

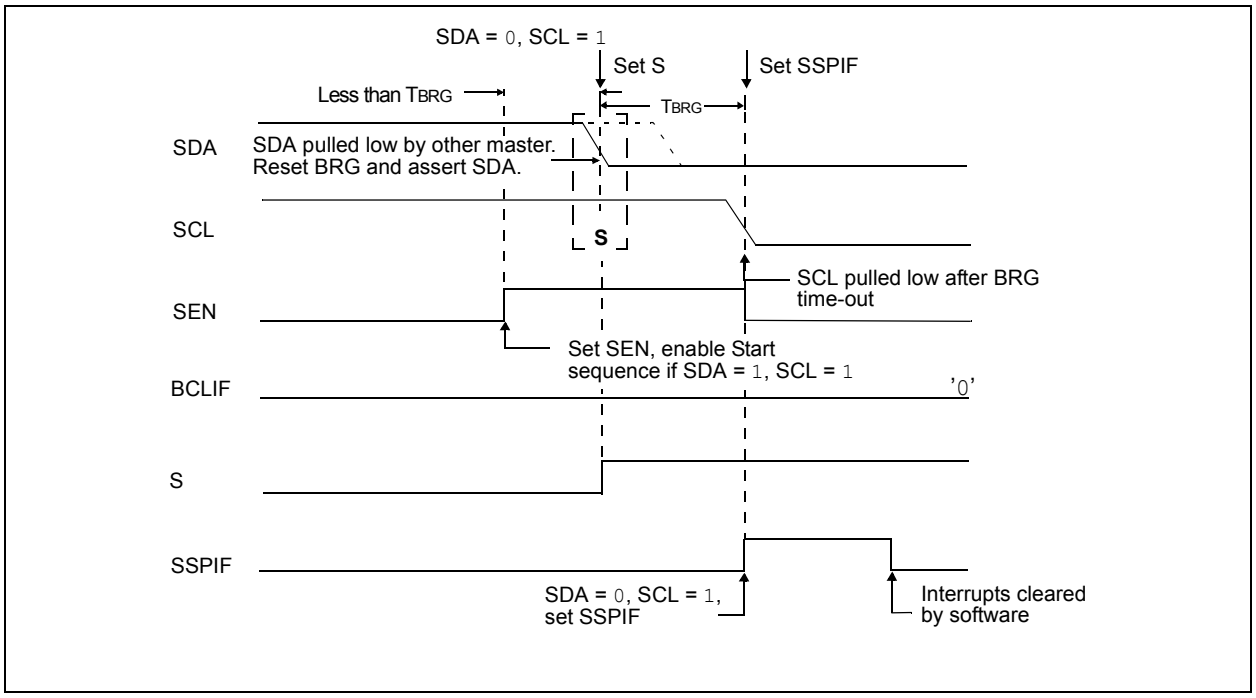

 © 2012 Microchip Technology Inc.

22.6.13.2 Bus Collision During a Repeated Start Condition

During a Repeated Start condition, a bus collision occurs if:

a) A low level is sampled on SDA when SCL goes from low level to high level (Case 1).

b) SCL goes low before SDA is asserted low, indicating that another master is attempting to transmit a data '1' (Case 2).

When the user releases SDA and the pin is allowed to float high, the BRG is loaded with SSPADD and counts down to zero. The SCL pin is then deasserted and when sampled high, the SDA pin is sampled.

If SDA is low, a bus collision has occurred (i.e., another master is attempting to transmit a data '0', Figure 22-36). If SDA is sampled high, the BRG is reloaded and begins counting. If SDA goes from high-to-low before the BRG times out, no bus collision occurs because no two masters can assert SDA at exactly the same time.

If SCL goes from high-to-low before the BRG times out and SDA has not already been asserted, a bus collision occurs. In this case, another master is attempting to transmit a data '1' during the Repeated Start condition, see Figure 22-37.

If, at the end of the BRG time-out, both SCL and SDA are still high, the SDA pin is driven low and the BRG is reloaded and begins counting. At the end of the count, regardless of the status of the SCL pin, the SCL pin is driven low and the Repeated Start condition is complete.

FIGURE 22-36: BUS COLLISION DURING A REPEATED START CONDITION (CASE 1)

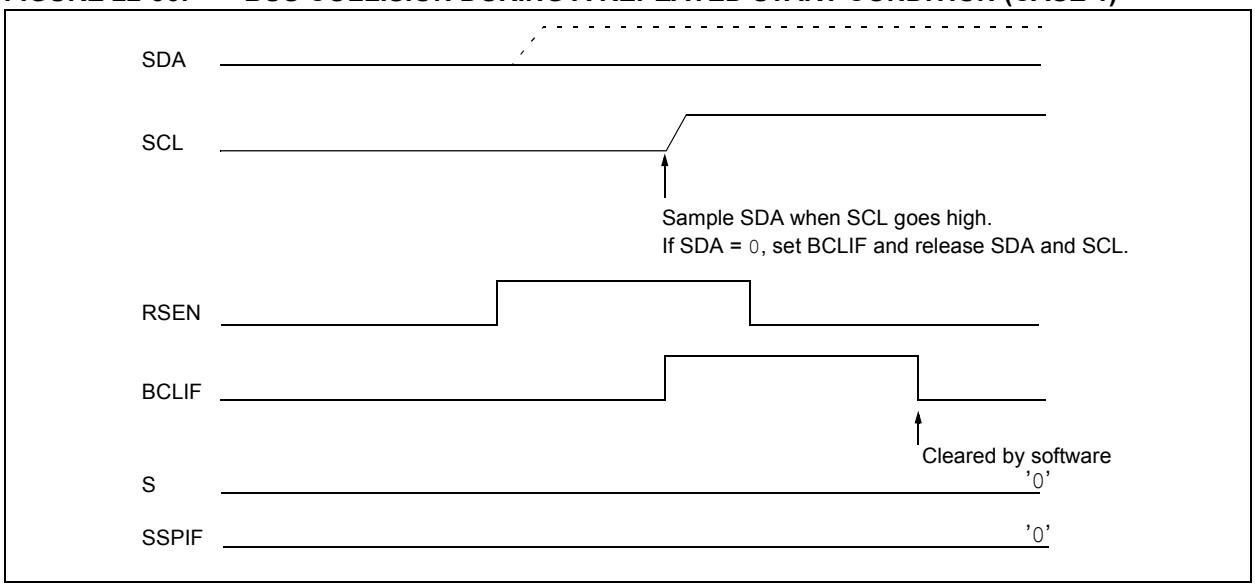

FIGURE 22-37: BUS COLLISION DURING REPEATED START CONDITION (CASE 2)

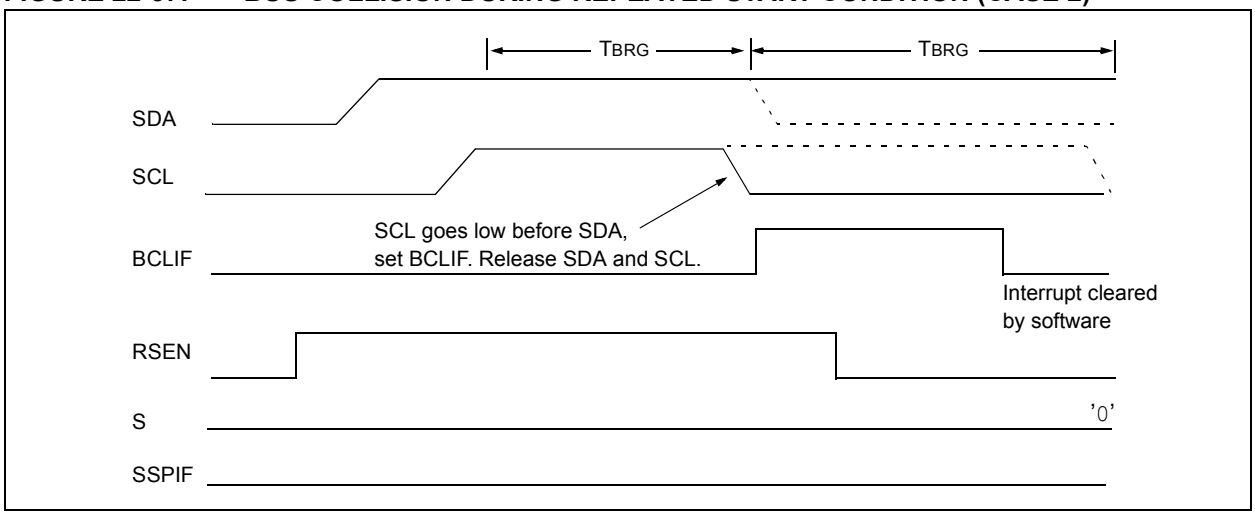

22.6.13.3 Bus Collision During a Stop Condition

Bus collision occurs during a Stop condition if:

a) After the SDA pin has been deasserted and allowed to float high, SDA is sampled low after the BRG has timed out (Case 1).

b) After the SCL pin is deasserted, SCL is sampled low before SDA goes high (Case 2).

The Stop condition begins with SDA asserted low. When SDA is sampled low, the SCL pin is allowed to float. When the pin is sampled high (clock arbitration), the Baud Rate Generator is loaded with SSPADD and counts down to zero. After the BRG times out, SDA is sampled. If SDA is sampled low, a bus collision has occurred. This is due to another master attempting to drive a data '0' (Figure 22-34). If the SCL pin is sampled low before SDA is allowed to float high, a bus collision occurs. This is another case of another master attempting to drive a data '0' (Figure 22-34).

FIGURE 22-38: BUS COLLISION DURING A STOP CONDITION (CASE 1)

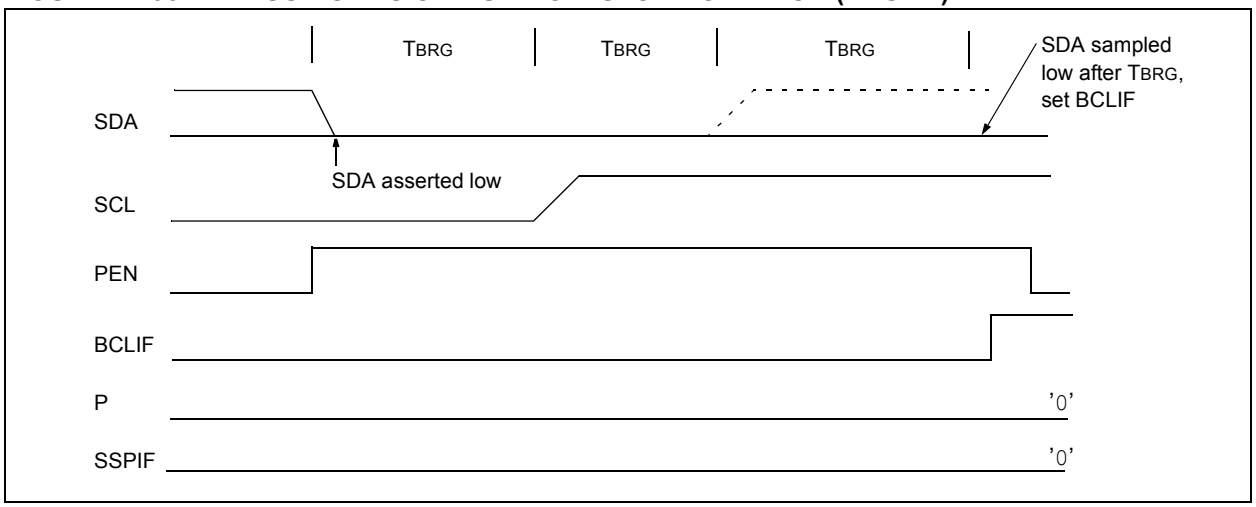

FIGURE 22-39: BUS COLLISION DURING A STOP CONDITION (CASE 2)

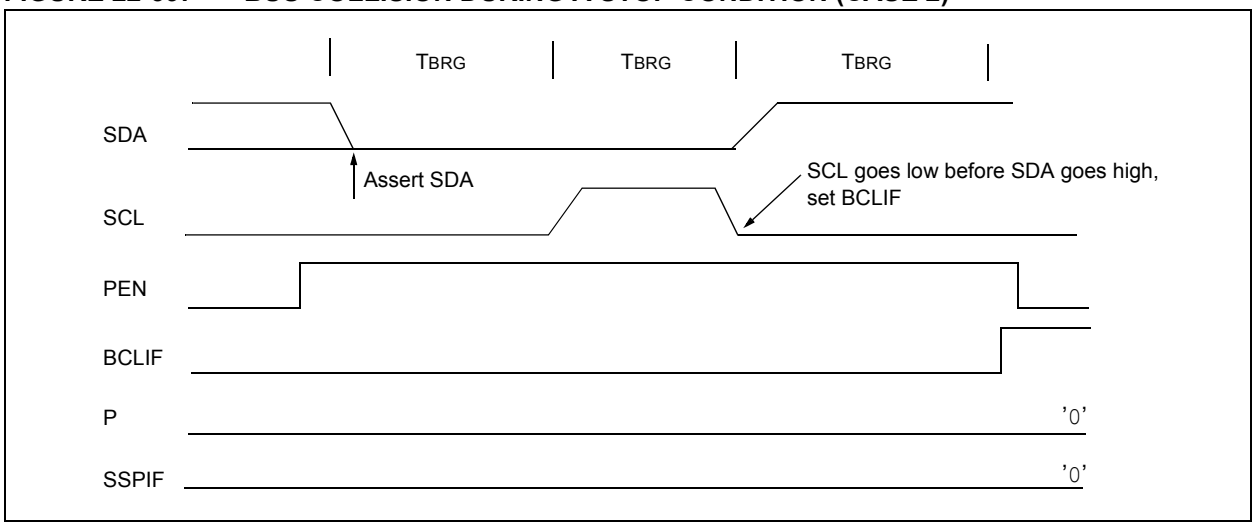

 © 2012 Microchip Technology Inc.

TABLE 22-3: SUMMARY OF REGISTERS ASSOCIATED WITH I²C™ OPERATION

Name	Bit 7	Bit 6	Bit 5	Bit 4	Bit 3	Bit 2	Bit 1	Bit 0	Reset Values on Page:
INTCON	GIE	PEIE	TMR0IE	INTE	IOCIE	TMR0IF	INTF	IOCIF	96
PIE1	TMR1GIE	ADIE(2)	RCIE	TXIE	SSP1IE	—	TMR2IE	TMR1IE	97
PIE2	OSFIE	C2IE	C1IE	—	BCL1IE	USBIE	ACTIE	—	98
PIR1	TMR1GIF	ADIF(2)	RCIF	TXIF	SSP1IF	—	TMR2IF	TMR1IF	99
PIR2	OSFIF	C2IF	C1IF	—	BCL1IF	USBIF	ACTIF	—	100
TRISA	—	—	TRISA5	TRISA4	—(1)	—	—(1)	—(1)	132
SSP1ADD	ADD<7:0>								256
SSP1BUF	MSSP Receive Buffer/Transmit Register								207*
SSP1CON1	WCOL	SSPOV	SSPEN	CKP	SSPM<3:0>				253
SSP1CON2	GCEN	ACKSTAT	ACKDT	ACKEN	RCEN	PEN	RSEN	SEN	254
SSP1CON3	ACKTIM	PCIE	SCIE	BOEN	SDAHT	SBCDE	AHEN	DHEN	255
SSP1MSK	MSK<7:0>								256
SSP1STAT	SMP	CKE	D/$\overline{A}$	P	S	R/$\overline{W}$	UA	BF	251

Legend: — = unimplemented location, read as '0'. Shaded cells are not used by the MSSP module in I²C™ mode.
* Page provides register information.

Note 1: Unimplemented, read as '1'.
2: PIC16(L)F1455/9 only.

22.7 BAUD RATE GENERATOR

The MSSP module has a Baud Rate Generator available for clock generation in both I^2C and SPI Master modes. The Baud Rate Generator (BRG) reload value is placed in the SSPADD register (Register 22-6). When a write occurs to SSPBUF, the Baud Rate Generator will automatically begin counting down.

Once the given operation is complete, the internal clock will automatically stop counting and the clock pin will remain in its last state.

An internal signal "Reload" in Figure 22-40 triggers the value from SSPADD to be loaded into the BRG counter. This occurs twice for each oscillation of the module clock line. The logic dictating when the reload signal is asserted depends on the mode the MSSP is being operated in.

Table 22-4 demonstrates clock rates based on instruction cycles and the BRG value loaded into SSPADD.

EQUATION 22-1:

$$F_{CLOCK} = \frac{F_{OSC}}{(SSPxADD + 1)(4)}$$

FIGURE 22-40: BAUD RATE GENERATOR BLOCK DIAGRAM

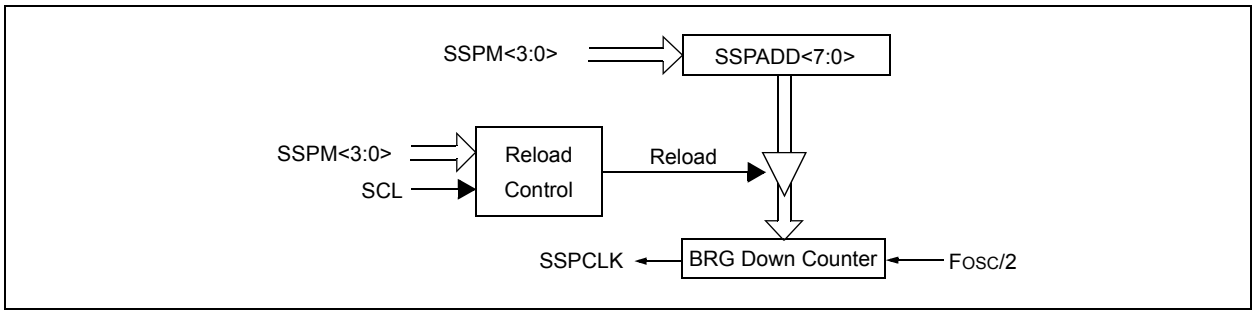

Note: Values of 0x00, 0x01 and 0x02 are not valid for SSPADD when used as a Baud Rate Generator for I^2C. This is an implementation limitation.

TABLE 22-4: MSSP CLOCK RATE W/BRG

FOSC	FCY	BRG Value	FCLOCK (2 Rollovers of BRG)
16 MHz	4 MHz	09h	400 kHz(1)
16 MHz	4 MHz	0Ch	308 kHz
16 MHz	4 MHz	27h	100 kHz
4 MHz	1 MHz	09h	100 kHz

Note 1: The I^2C interface does not conform to the 400 kHz I^2C specification (which applies to rates greater than 100 kHz) in all details, but may be used with care where higher rates are required by the application.

 © 2012 Microchip Technology Inc.

22.8 Register Definitions: MSSP Control

REGISTER 22-1: SSPSTAT: SSP STATUS REGISTER

R/W-0/0	R/W-0/0	R-0/0	R-0/0	R-0/0	R-0/0	R-0/0	R-0/0
SMP	CKE	D/$\overline{A}$	P	S	R/$\overline{W}$	UA	BF
bit 7							bit 0

Legend:		
R = Readable bit	W = Writable bit	U = Unimplemented bit, read as ‘0’
u = Bit is unchanged	x = Bit is unknown	-n/n = Value at POR and BOR/Value at all other Resets
‘1’ = Bit is set	‘0’ = Bit is cleared	

bit 7 **SMP:** SPI Data Input Sample bit

SPI Master mode:
1 = Input data sampled at end of data output time
0 = Input data sampled at middle of data output time

SPI Slave mode:
SMP must be cleared when SPI is used in Slave mode

In I^2C Master or Slave mode:
1 = Slew rate control disabled for Standard-Speed mode (100 kHz and 1 MHz)
0 = Slew rate control enabled for High-Speed mode (400 kHz)

bit 6 **CKE:** SPI Clock Edge Select bit (SPI mode only)

In SPI Master or Slave mode:
1 = Transmit occurs on transition from active to Idle clock state
0 = Transmit occurs on transition from Idle to active clock state

In I^2C™ mode only:
1 = Enable input logic so that thresholds are compliant with SMbus specification
0 = Disable SMbus specific inputs

bit 5 **D/$\overline{A}$:** Data/$\overline{\text{Address}}$ bit (I^2C mode only)
1 = Indicates that the last byte received or transmitted was data
0 = Indicates that the last byte received or transmitted was address

bit 4 **P:** Stop bit
(I^2C mode only. This bit is cleared when the MSSP module is disabled, SSPEN is cleared.)
1 = Indicates that a Stop bit has been detected last (this bit is ‘0’ on Reset)
0 = Stop bit was not detected last

bit 3 **S:** Start bit
(I^2C mode only. This bit is cleared when the MSSP module is disabled, SSPEN is cleared.)
1 = Indicates that a Start bit has been detected last (this bit is ‘0’ on Reset)
0 = Start bit was not detected last

bit 2 **R/$\overline{W}$:** Read/$\overline{\text{Write}}$ bit information (I^2C mode only)
This bit holds the R/$\overline{W}$ bit information following the last address match. This bit is only valid from the address match to the next Start bit, Stop bit, or not $\overline{\text{ACK}}$ bit.

In I^2C Slave mode:
1 = Read
0 = Write

In I^2C Master mode:
1 = Transmit is in progress
0 = Transmit is not in progress
OR-ing this bit with SEN, RSEN, PEN, RCEN or ACKEN will indicate if the MSSP is in Idle mode.

bit 1 **UA:** Update Address bit (10-bit I^2C mode only)
1 = Indicates that the user needs to update the address in the SSPADD register
0 = Address does not need to be updated

REGISTER 22-1: SSPSTAT: SSP STATUS REGISTER (CONTINUED)

bit 0 **BF:** Buffer Full Status bit

Receive (SPI and I^2C modes):
1 = Receive complete, SSPBUF is full
0 = Receive not complete, SSPBUF is empty

Transmit (I^2C mode only):
1 = Data transmit in progress (does not include the $\overline{ACK}$ and Stop bits), SSPBUF is full
0 = Data transmit complete (does not include the $\overline{ACK}$ and Stop bits), SSPBUF is empty

 © 2012 Microchip Technology Inc.

REGISTER 22-2: SSPCON1: SSP CONTROL REGISTER 1

R/C/HS-0/0	R/C/HS-0/0	R/W-0/0	R/W-0/0	R/W-0/0	R/W-0/0	R/W-0/0	R/W-0/0
WCOL	SSPOV	SSPEN	CKP	SSPM<3:0>			
bit 7							bit 0

Legend:			
R = Readable bit	W = Writable bit	U = Unimplemented bit, read as ‘0’	
u = Bit is unchanged	x = Bit is unknown	-n/n = Value at POR and BOR/Value at all other Resets	
‘1’ = Bit is set	‘0’ = Bit is cleared	HS = Bit is set by hardware	C = User cleared

bit 7 **WCOL:** Write Collision Detect bit
Master mode:
1 = A write to the SSPBUF register was attempted while the I^2C conditions were not valid for a transmission to be started
0 = No collision
Slave mode:
1 = The SSPBUF register is written while it is still transmitting the previous word (must be cleared in software)
0 = No collision

bit 6 **SSPOV:** Receive Overflow Indicator bit(1)
In SPI mode:
1 = A new byte is received while the SSPBUF register is still holding the previous data. In case of overflow, the data in SSPSR is lost. Overflow can only occur in Slave mode. In Slave mode, the user must read the SSPBUF, even if only transmitting data, to avoid setting overflow. In Master mode, the overflow bit is not set since each new reception (and transmission) is initiated by writing to the SSPBUF register (must be cleared in software).
0 = No overflow
In I^2C mode:
1 = A byte is received while the SSPBUF register is still holding the previous byte. SSPOV is a “don’t care” in Transmit mode (must be cleared in software).
0 = No overflow

bit 5 **SSPEN:** Synchronous Serial Port Enable bit
In both modes, when enabled, these pins must be properly configured as input or output
In SPI mode:
1 = Enables serial port and configures SCK, SDO, SDI and $\overline{SS}$ as the source of the serial port pins(2)
0 = Disables serial port and configures these pins as I/O port pins
In I^2C mode:
1 = Enables the serial port and configures the SDA and SCL pins as the source of the serial port pins(3)
0 = Disables serial port and configures these pins as I/O port pins

bit 4 **CKP:** Clock Polarity Select bit
In SPI mode:
1 = Idle state for clock is a high level
0 = Idle state for clock is a low level
In I^2C Slave mode:
SCL release control
1 = Enable clock
0 = Holds clock low (clock stretch). (Used to ensure data setup time.)
In I^2C Master mode:
Unused in this mode

bit 3-0 **SSPM<3:0>:** Synchronous Serial Port Mode Select bits
0000 = SPI Master mode, clock = FOSC/4
0001 = SPI Master mode, clock = FOSC/16
0010 = SPI Master mode, clock = FOSC/64
0011 = SPI Master mode, clock = TMR2 output/2
0100 = SPI Slave mode, clock = SCK pin, $\overline{SS}$ pin control enabled
0101 = SPI Slave mode, clock = SCK pin, $\overline{SS}$ pin control disabled, $\overline{SS}$ can be used as I/O pin
0110 = I^2C Slave mode, 7-bit address
0111 = I^2C Slave mode, 10-bit address
1000 = I^2C Master mode, clock = FOSC / (4 * (SSPADD+1))(4)
1001 = Reserved
1010 = SPI Master mode, clock = FOSC/(4 * (SSPADD+1))(5)
1011 = I^2C firmware controlled Master mode (Slave idle)
1100 = Reserved
1101 = Reserved
1110 = I^2C Slave mode, 7-bit address with Start and Stop bit interrupts enabled
1111 = I^2C Slave mode, 10-bit address with Start and Stop bit interrupts enabled

Note 1: In Master mode, the overflow bit is not set since each new reception (and transmission) is initiated by writing to the SSPBUF register.
2: When enabled, these pins must be properly configured as input or output.
3: When enabled, the SDA and SCL pins must be configured as inputs.
4: SSPADD values of 0, 1 or 2 are not supported for I^2C mode.
5: SSPADD value of ‘0’ is not supported. Use SSPM = 0000 instead.

REGISTER 22-3: SSPCON2: SSP CONTROL REGISTER 2

R/W-0/0	R-0/0	R/W-0/0	R/S/HS-0/0	R/S/HS-0/0	R/S/HS-0/0	R/S/HS-0/0	R/W/HS-0/0
GCEN	ACKSTAT	ACKDT	ACKEN	RCEN	PEN	RSEN	SEN
bit 7							bit 0

Legend:		
R = Readable bit	W = Writable bit	U = Unimplemented bit, read as ‘0’
u = Bit is unchanged	x = Bit is unknown	-n/n = Value at POR and BOR/Value at all other Resets
‘1’ = Bit is set	‘0’ = Bit is cleared	HC = Cleared by hardware S = User set

bit 7 **GCEN:** General Call Enable bit (in I^2C Slave mode only)
1 = Enable interrupt when a general call address (0x00 or 00h) is received in the SSPSR
0 = General call address disabled

bit 6 **ACKSTAT:** Acknowledge Status bit (in I^2C mode only)
1 = Acknowledge was not received
0 = Acknowledge was received

bit 5 **ACKDT:** Acknowledge Data bit (in I^2C mode only)
In Receive mode:
Value transmitted when the user initiates an Acknowledge sequence at the end of a receive
1 = Not Acknowledge
0 = Acknowledge

bit 4 **ACKEN:** Acknowledge Sequence Enable bit (in I^2C Master mode only)
In Master Receive mode:
1 = Initiate Acknowledge sequence on SDA and SCL pins, and transmit ACKDT data bit. Automatically cleared by hardware.
0 = Acknowledge sequence idle

bit 3 **RCEN:** Receive Enable bit (in I^2C Master mode only)
1 = Enables Receive mode for I^2C
0 = Receive idle

bit 2 **PEN:** Stop Condition Enable bit (in I^2C Master mode only)
SCKMSSP Release Control:
1 = Initiate Stop condition on SDA and SCL pins. Automatically cleared by hardware.
0 = Stop condition Idle

bit 1 **RSEN:** Repeated Start Condition Enable bit (in I^2C Master mode only)
1 = Initiate Repeated Start condition on SDA and SCL pins. Automatically cleared by hardware.
0 = Repeated Start condition Idle

bit 0 **SEN:** Start Condition Enable/Stretch Enable bit
In Master mode:
1 = Initiate Start condition on SDA and SCL pins. Automatically cleared by hardware.
0 = Start condition Idle
In Slave mode:
1 = Clock stretching is enabled for both slave transmit and slave receive (stretch enabled)
0 = Clock stretching is disabled

Note 1: For bits ACKEN, RCEN, PEN, RSEN, SEN: If the I^2C module is not in the Idle mode, this bit may not be set (no spooling) and the SSPBUF may not be written (or writes to the SSPBUF are disabled).

 © 2012 Microchip Technology Inc.

REGISTER 22-4: SSPCON3: SSP CONTROL REGISTER 3

R-0/0	R/W-0/0	R/W-0/0	R/W-0/0	R/W-0/0	R/W-0/0	R/W-0/0	R/W-0/0
ACKTIM	PCIE	SCIE	BOEN	SDAHT	SBCDE	AHEN	DHEN
bit 7							bit 0

Legend:		
R = Readable bit	W = Writable bit	U = Unimplemented bit, read as ‘0’
u = Bit is unchanged	x = Bit is unknown	-n/n = Value at POR and BOR/Value at all other Resets
‘1’ = Bit is set	‘0’ = Bit is cleared	

bit 7 **ACKTIM:** Acknowledge Time Status bit (I^2C mode only)(3)
1 = Indicates the I^2C bus is in an Acknowledge sequence, set on 8TH falling edge of SCL clock
0 = Not an Acknowledge sequence, cleared on 9TH rising edge of SCL clock

bit 6 **PCIE**: Stop Condition Interrupt Enable bit (I^2C mode only)
1 = Enable interrupt on detection of Stop condition
0 = Stop detection interrupts are disabled(2)

bit 5 **SCIE**: Start Condition Interrupt Enable bit (I^2C mode only)
1 = Enable interrupt on detection of Start or Restart conditions
0 = Start detection interrupts are disabled(2)

bit 4 **BOEN:** Buffer Overwrite Enable bit
In SPI Slave mode:(1)
1 = SSPBUF updates every time that a new data byte is shifted in ignoring the BF bit
0 = If new byte is received with BF bit of the SSPSTAT register already set, SSPOV bit of the SSPCON1 register is set, and the buffer is not updated
In I^2C Master mode and SPI Master mode:
This bit is ignored.
In I^2C Slave mode:
1 = SSPBUF is updated and $\overline{ACK}$ is generated for a received address/data byte, ignoring the state of the SSPOV bit only if the BF bit = 0.
0 = SSPBUF is only updated when SSPOV is clear

bit 3 **SDAHT:** SDA Hold Time Selection bit (I^2C mode only)
1 = Minimum of 300 ns hold time on SDA after the falling edge of SCL
0 = Minimum of 100 ns hold time on SDA after the falling edge of SCL

bit 2 **SBCDE:** Slave Mode Bus Collision Detect Enable bit (I^2C Slave mode only)
If on the rising edge of SCL, SDA is sampled low when the module is outputting a high state, the BCL1IF bit of the PIR2 register is set, and bus goes idle
1 = Enable slave bus collision interrupts
0 = Slave bus collision interrupts are disabled

bit 1 **AHEN:** Address Hold Enable bit (I^2C Slave mode only)
1 = Following the 8th falling edge of SCL for a matching received address byte; CKP bit of the SSPCON1 register will be cleared and the SCL will be held low.
0 = Address holding is disabled

bit 0 **DHEN:** Data Hold Enable bit (I^2C Slave mode only)
1 = Following the 8th falling edge of SCL for a received data byte; slave hardware clears the CKP bit of the SSPCON1 register and SCL is held low.
0 = Data holding is disabled

Note 1: For daisy-chained SPI operation; allows the user to ignore all but the last received byte. SSPOV is still set when a new byte is received and BF = 1, but hardware continues to write the most recent byte to SSPBUF.
2: This bit has no effect in Slave modes that Start and Stop condition detection is explicitly listed as enabled.
3: The ACKTIM Status bit is only active when the AHEN bit or DHEN bit is set.

REGISTER 22-5: SSPMSK: SSP MASK REGISTER

R/W-1/1	R/W-1/1	R/W-1/1	R/W-1/1	R/W-1/1	R/W-1/1	R/W-1/1	R/W-1/1
MSK<7:0>							
bit 7							bit 0

Legend:		
R = Readable bit	W = Writable bit	U = Unimplemented bit, read as ‘0’
u = Bit is unchanged	x = Bit is unknown	-n/n = Value at POR and BOR/Value at all other Resets
‘1’ = Bit is set	‘0’ = Bit is cleared	

bit 7-1 **MSK<7:1>:** Mask bits
`1` = The received address bit n is compared to SSPADD<n> to detect I^2C address match
`0` = The received address bit n is not used to detect I^2C address match

bit 0 **MSK<0>:** Mask bit for I^2C Slave mode, 10-bit Address
I^2C Slave mode, 10-bit address (SSPM<3:0> = `0111` or `1111`):
`1` = The received address bit 0 is compared to SSPADD<0> to detect I^2C address match
`0` = The received address bit 0 is not used to detect I^2C address match
I^2C Slave mode, 7-bit address, the bit is ignored

REGISTER 22-6: SSPADD: MSSP ADDRESS AND BAUD RATE REGISTER (I^2C MODE)

R/W-0/0	R/W-0/0	R/W-0/0	R/W-0/0	R/W-0/0	R/W-0/0	R/W-0/0	R/W-0/0
ADD<7:0>							
bit 7							bit 0

Legend:		
R = Readable bit	W = Writable bit	U = Unimplemented bit, read as ‘0’
u = Bit is unchanged	x = Bit is unknown	-n/n = Value at POR and BOR/Value at all other Resets
‘1’ = Bit is set	‘0’ = Bit is cleared	

Master mode:

bit 7-0 **ADD<7:0>:** Baud Rate Clock Divider bits
SCL pin clock period = ((ADD<7:0> + 1) *4)/FOSC

10-Bit Slave mode — Most Significant Address Byte:

bit 7-3 **Not used:** Unused for Most Significant Address Byte. Bit state of this register is a “don’t care”. Bit pattern sent by master is fixed by I^2C specification and must be equal to ‘`11110`’. However, those bits are compared by hardware and are not affected by the value in this register.

bit 2-1 **ADD<2:1>:** Two Most Significant bits of 10-bit address

bit 0 **Not used:** Unused in this mode. Bit state is a “don’t care”.

10-Bit Slave mode — Least Significant Address Byte:

bit 7-0 **ADD<7:0>:** Eight Least Significant bits of 10-bit address

7-Bit Slave mode:

bit 7-1 **ADD<7:1>:** 7-bit address

bit 0 **Not used:** Unused in this mode. Bit state is a “don’t care”.

 © 2012 Microchip Technology Inc.

23.0 ENHANCED UNIVERSAL SYNCHRONOUS ASYNCHRONOUS RECEIVER TRANSMITTER (EUSART)

The Enhanced Universal Synchronous Asynchronous Receiver Transmitter (EUSART) module is a serial I/O communications peripheral. It contains all the clock generators, shift registers and data buffers necessary to perform an input or output serial data transfer independent of device program execution. The EUSART, also known as a Serial Communications Interface (SCI), can be configured as a full-duplex asynchronous system or half-duplex synchronous system. Full-Duplex mode is useful for communications with peripheral systems, such as CRT terminals and personal computers. Half-Duplex Synchronous mode is intended for communications with peripheral devices, such as A/D or D/A integrated circuits, serial EEPROMs or other microcontrollers. These devices typically do not have internal clocks for baud rate generation and require the external clock signal provided by a master synchronous device.

The EUSART module includes the following capabilities:

- Full-duplex asynchronous transmit and receive
- Two-character input buffer
- One-character output buffer
- Programmable 8-bit or 9-bit character length
- Address detection in 9-bit mode
- Input buffer overrun error detection
- Received character framing error detection
- Half-duplex synchronous master
- Half-duplex synchronous slave
- Programmable clock polarity in Synchronous modes
- Sleep operation

The EUSART module implements the following additional features, making it ideally suited for use in Local Interconnect Network (LIN) bus systems:

- Automatic detection and calibration of the baud rate
- Wake-up on Break reception
- 13-bit Break character transmit

Block diagrams of the EUSART transmitter and receiver are shown in Figure 23-1 and Figure 23-2.

FIGURE 23-1: EUSART TRANSMIT BLOCK DIAGRAM

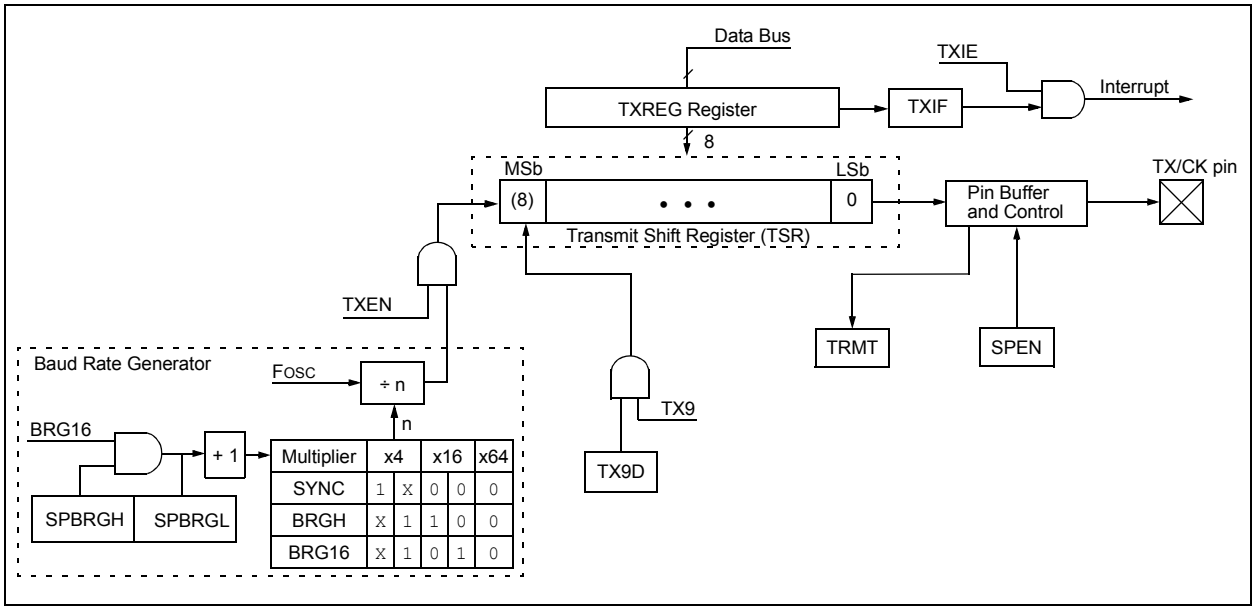

FIGURE 23-2: EUSART RECEIVE BLOCK DIAGRAM

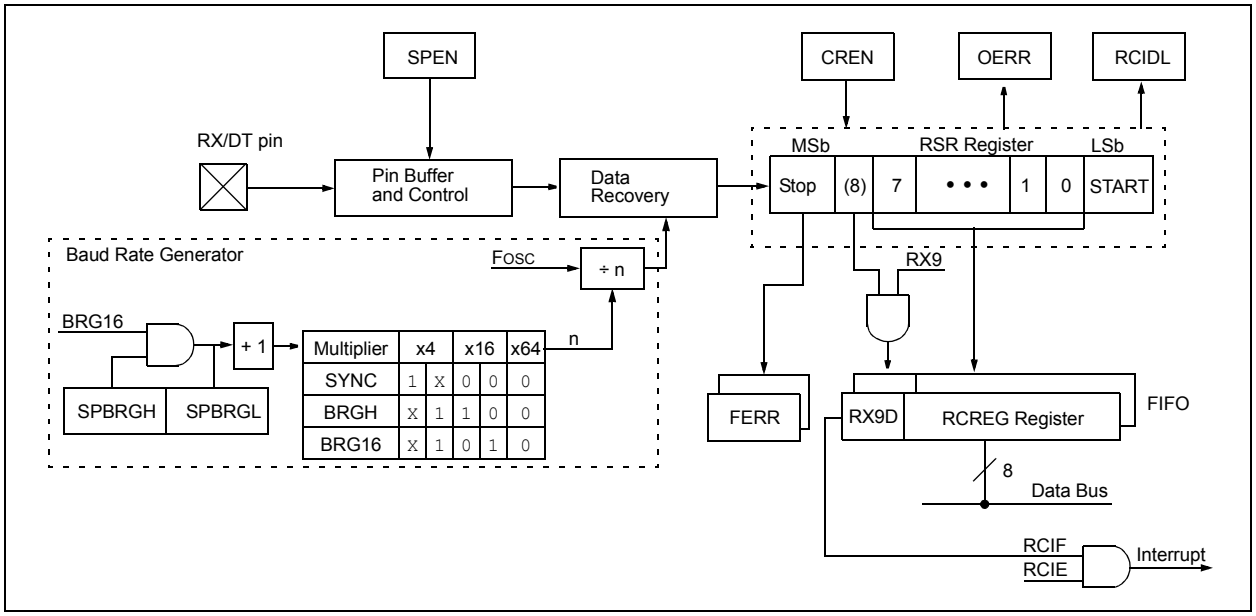

The operation of the EUSART module is controlled through three registers:

- Transmit Status and Control (TXSTA)
- Receive Status and Control (RCSTA)
- Baud Rate Control (BAUDCON)

These registers are detailed in Register 23-1, Register 23-2 and Register 23-3, respectively.

When the receiver or transmitter section is not enabled then the corresponding RX or TX pin may be used for general purpose input and output.

 © 2012 Microchip Technology Inc.

23.1 EUSART Asynchronous Mode

The EUSART transmits and receives data using the standard non-return-to-zero (NRZ) format. NRZ is implemented with two levels: a VOH mark state which represents a '1' data bit, and a VOL space state which represents a '0' data bit. NRZ refers to the fact that consecutively transmitted data bits of the same value stay at the output level of that bit without returning to a neutral level between each bit transmission. An NRZ transmission port idles in the Mark state. Each character transmission consists of one Start bit followed by eight or nine data bits and is always terminated by one or more Stop bits. The Start bit is always a space and the Stop bits are always marks. The most common data format is eight bits. Each transmitted bit persists for a period of 1/(Baud Rate). An on-chip dedicated 8-bit/16-bit Baud Rate Generator is used to derive standard baud rate frequencies from the system oscillator. See Table 23-5 for examples of baud rate configurations.

The EUSART transmits and receives the LSb first. The EUSART's transmitter and receiver are functionally independent, but share the same data format and baud rate. Parity is not supported by the hardware, but can be implemented in software and stored as the ninth data bit.

23.1.1 EUSART ASYNCHRONOUS TRANSMITTER

The EUSART transmitter block diagram is shown in Figure 23-1. The heart of the transmitter is the serial Transmit Shift Register (TSR), which is not directly accessible by software. The TSR obtains its data from the transmit buffer, which is the TXREG register.

23.1.1.1 Enabling the Transmitter

The EUSART transmitter is enabled for asynchronous operations by configuring the following three control bits:

- TXEN = 1
- SYNC = 0
- SPEN = 1

All other EUSART control bits are assumed to be in their default state.

Setting the TXEN bit of the TXSTA register enables the transmitter circuitry of the EUSART. Clearing the SYNC bit of the TXSTA register configures the EUSART for asynchronous operation. Setting the SPEN bit of the RCSTA register enables the EUSART and automatically configures the TX/CK I/O pin as an output. If the TX/CK pin is shared with an analog peripheral, the analog I/O function must be disabled by clearing the corresponding ANSEL bit.

Note:	The TXIF Transmitter Interrupt flag is set when the TXEN enable bit is set.

23.1.1.2 Transmitting Data

A transmission is initiated by writing a character to the TXREG register. If this is the first character, or the previous character has been completely flushed from the TSR, the data in the TXREG is immediately transferred to the TSR register. If the TSR still contains all or part of a previous character, the new character data is held in the TXREG until the Stop bit of the previous character has been transmitted. The pending character in the TXREG is then transferred to the TSR in one TCY immediately following the Stop bit transmission. The transmission of the Start bit, data bits and Stop bit sequence commences immediately following the transfer of the data to the TSR from the TXREG.

23.1.1.3 Transmit Data Polarity

The polarity of the transmit data can be controlled with the SCKP bit of the BAUDCON register. The default state of this bit is '0' which selects high true transmit idle and data bits. Setting the SCKP bit to '1' will invert the transmit data resulting in low true Idle and data bits. The SCKP bit controls transmit data polarity in Asynchronous mode only. In Synchronous mode, the SCKP bit has a different function. See **Section 23.5.1.2 "Clock Polarity"**.

23.1.1.4 Transmit Interrupt Flag

The TXIF interrupt flag bit of the PIR1 register is set whenever the EUSART transmitter is enabled and no character is being held for transmission in the TXREG. In other words, the TXIF bit is only clear when the TSR is busy with a character and a new character has been queued for transmission in the TXREG. The TXIF flag bit is not cleared immediately upon writing TXREG. TXIF becomes valid in the second instruction cycle following the write execution. Polling TXIF immediately following the TXREG write will return invalid results. The TXIF bit is read-only, it cannot be set or cleared by software.

The TXIF interrupt can be enabled by setting the TXIE interrupt enable bit of the PIE1 register. However, the TXIF flag bit will be set whenever the TXREG is empty, regardless of the state of TXIE enable bit.

To use interrupts when transmitting data, set the TXIE bit only when there is more data to send. Clear the TXIE interrupt enable bit upon writing the last character of the transmission to the TXREG.

23.1.1.5 TSR Status

The TRMT bit of the TXSTA register indicates the status of the TSR register. This is a read-only bit. The TRMT bit is set when the TSR register is empty and is cleared when a character is transferred to the TSR register from the TXREG. The TRMT bit remains clear until all bits have been shifted out of the TSR register. No interrupt logic is tied to this bit, so the user has to poll this bit to determine the TSR status.

Note:	The TSR register is not mapped in data memory, so it is not available to the user.

23.1.1.6 Transmitting 9-Bit Characters

The EUSART supports 9-bit character transmissions. When the TX9 bit of the TXSTA register is set, the EUSART will shift nine bits out for each character transmitted. The TX9D bit of the TXSTA register is the ninth, and Most Significant, data bit. When transmitting 9-bit data, the TX9D data bit must be written before writing the eight Least Significant bits into the TXREG. All nine bits of data will be transferred to the TSR shift register immediately after the TXREG is written.

A special 9-bit Address mode is available for use with multiple receivers. See **Section 23.1.2.7 "Address Detection"** for more information on the address mode.

23.1.1.7 Asynchronous Transmission Set-up:

1. Initialize the SPBRGH, SPBRGL register pair and the BRGH and BRG16 bits to achieve the desired baud rate (see **Section 23.4 "EUSART Baud Rate Generator (BRG)"**).
2. Enable the asynchronous serial port by clearing the SYNC bit and setting the SPEN bit.
3. If 9-bit transmission is desired, set the TX9 control bit. A set ninth data bit will indicate that the eight Least Significant data bits are an address when the receiver is set for address detection.
4. Set SCKP bit if inverted transmit is desired.
5. Enable the transmission by setting the TXEN control bit. This will cause the TXIF interrupt bit to be set.
6. If interrupts are desired, set the TXIE interrupt enable bit of the PIE1 register. An interrupt will occur immediately provided that the GIE and PEIE bits of the INTCON register are also set.
7. If 9-bit transmission is selected, the ninth bit should be loaded into the TX9D data bit.
8. Load 8-bit data into the TXREG register. This will start the transmission.

FIGURE 23-3: ASYNCHRONOUS TRANSMISSION

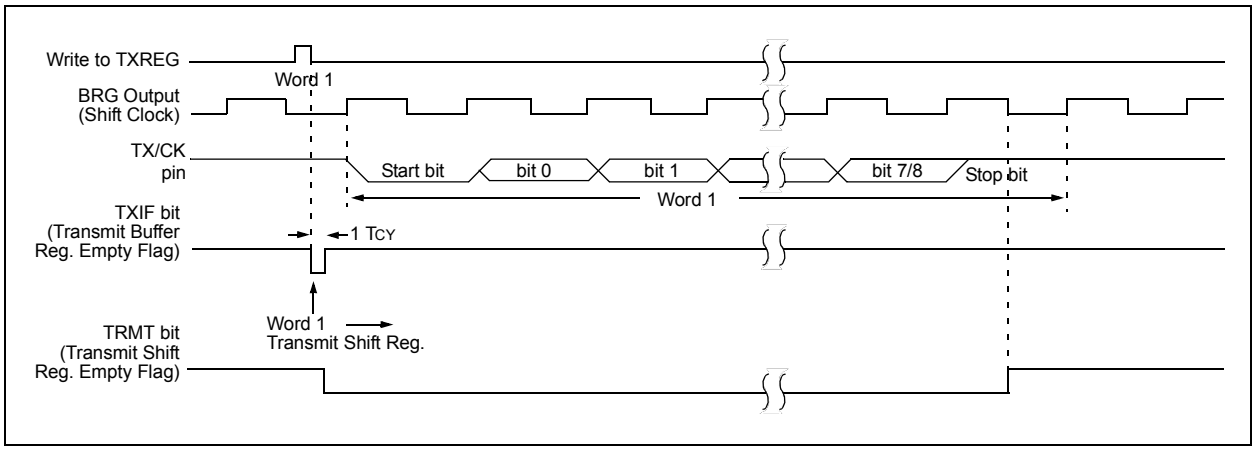

FIGURE 23-4: ASYNCHRONOUS TRANSMISSION (BACK-TO-BACK)

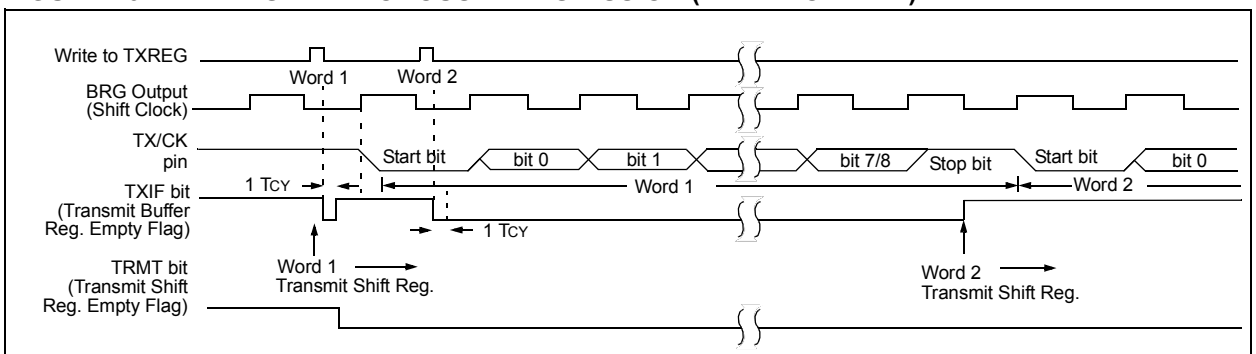

Note: This timing diagram shows two consecutive transmissions.

 © 2012 Microchip Technology Inc.

TABLE 23-1: SUMMARY OF REGISTERS ASSOCIATED WITH ASYNCHRONOUS TRANSMISSION

Name	Bit 7	Bit 6	Bit 5	Bit 4	Bit 3	Bit 2	Bit 1	Bit 0	Register on Page
BAUDCON	ABDOVF	RCIDL	—	SCKP	BRG16	—	WUE	ABDEN	269
INTCON	GIE	PEIE	TMR0IE	INTE	IOCIE	TMR0IF	INTF	IOCIF	96
PIE1	TMR1GIE	ADIE(2)	RCIE	TXIE	SSP1IE	—	TMR2IE	TMR1IE	97
PIR1	TMR1GIF	ADIF(2)	RCIF	TXIF	SSP1IF	—	TMR2IF	TMR1IF	99
RCSTA	SPEN	RX9	SREN	CREN	ADDEN	FERR	OERR	RX9D	268*
SPBRGL	BRG<7:0>								270*
SPBRGH	BRG<15:8>								270*
TRISC	TRISC7(1)	TRISC6(1)	TRISC5	TRISC4	TRISC3	TRISC2	TRISC1	TRISC0	140
TXREG	EUSART Transmit Data Register								259
TXSTA	CSRC	TX9	TXEN	SYNC	SENDB	BRGH	TRMT	TX9D	267

Legend: — = unimplemented location, read as '0'. Shaded cells are not used for asynchronous transmission.

* Page provides register information.

Note 1: PIC16(L)F1459 only.

2: PIC16(L)F1455/9 only.

23.1.2 EUSART ASYNCHRONOUS RECEIVER

The Asynchronous mode is typically used in RS-232 systems. The receiver block diagram is shown in Figure 23-2. The data is received on the RX/DT pin and drives the data recovery block. The data recovery block is actually a high-speed shifter operating at 16 times the baud rate, whereas the serial Receive Shift Register (RSR) operates at the bit rate. When all eight or nine bits of the character have been shifted in, they are immediately transferred to a two character First-In-First-Out (FIFO) memory. The FIFO buffering allows reception of two complete characters and the start of a third character before software must start servicing the EUSART receiver. The FIFO and RSR registers are not directly accessible by software. Access to the received data is via the RCREG register.

23.1.2.1 Enabling the Receiver

The EUSART receiver is enabled for asynchronous operation by configuring the following three control bits:

- CREN = 1
- SYNC = 0
- SPEN = 1

All other EUSART control bits are assumed to be in their default state.

Setting the CREN bit of the RCSTA register enables the receiver circuitry of the EUSART. Clearing the SYNC bit of the TXSTA register configures the EUSART for asynchronous operation. Setting the SPEN bit of the RCSTA register enables the EUSART. The programmer must set the corresponding TRIS bit to configure the RX/DT I/O pin as an input.

Note:	If the RX/DT function is on an analog pin, the corresponding ANSEL bit must be cleared for the receiver to function.

23.1.2.2 Receiving Data

The receiver data recovery circuit initiates character reception on the falling edge of the first bit. The first bit, also known as the Start bit, is always a zero. The data recovery circuit counts one-half bit time to the center of the Start bit and verifies that the bit is still a zero. If it is not a zero then the data recovery circuit aborts character reception, without generating an error, and resumes looking for the falling edge of the Start bit. If the Start bit zero verification succeeds then the data recovery circuit counts a full bit time to the center of the next bit. The bit is then sampled by a majority detect circuit and the resulting '0' or '1' is shifted into the RSR. This repeats until all data bits have been sampled and shifted into the RSR. One final bit time is measured and the level sampled. This is the Stop bit, which is always a '1'. If the data recovery circuit samples a '0' in the Stop bit position, then a framing error is set for this character, otherwise, the framing error is cleared for this character. See **Section 23.1.2.4 "Receive Framing Error"** for more information on framing errors.

Immediately after all data bits and the Stop bit have been received, the character in the RSR is transferred to the EUSART receive FIFO and the RCIF interrupt flag bit of the PIR1 register is set. The top character in the FIFO is transferred out of the FIFO by reading the RCREG register.

Note:	If the receive FIFO is overrun, no additional characters will be received until the overrun condition is cleared. See **Section 23.1.2.5 "Receive Overrun Error"** for more information on overrun errors.

23.1.2.3 Receive Interrupts

The RCIF interrupt flag bit of the PIR1 register is set whenever the EUSART receiver is enabled and there is an unread character in the receive FIFO. The RCIF interrupt flag bit is read-only, it cannot be set or cleared by software.

RCIF interrupts are enabled by setting all of the following bits:

- RCIE interrupt enable bit of the PIE1 register
- PEIE peripheral interrupt enable bit of the INTCON register
- GIE Global Interrupt Enable bit of the INTCON register

The RCIF interrupt flag bit will be set when there is an unread character in the FIFO, regardless of the state of interrupt enable bits.

 © 2012 Microchip Technology Inc.

23.1.2.4 Receive Framing Error

Each character in the receive FIFO buffer has a corresponding framing error Status bit. A framing error indicates that a Stop bit was not seen at the expected time. The framing error status is accessed via the FERR bit of the RCSTA register. The FERR bit represents the status of the top unread character in the receive FIFO. Therefore, the FERR bit must be read before reading the RCREG.

The FERR bit is read-only and only applies to the top unread character in the receive FIFO. A framing error (FERR = 1) does not preclude reception of additional characters. It is not necessary to clear the FERR bit. Reading the next character from the FIFO buffer will advance the FIFO to the next character and the next corresponding framing error.

The FERR bit can be forced clear by clearing the SPEN bit of the RCSTA register which resets the EUSART. Clearing the CREN bit of the RCSTA register does not affect the FERR bit. A framing error by itself does not generate an interrupt.

Note:	If all receive characters in the receive FIFO have framing errors, repeated reads of the RCREG will not clear the FERR bit.

23.1.2.5 Receive Overrun Error

The receive FIFO buffer can hold two characters. An overrun error will be generated if a third character, in its entirety, is received before the FIFO is accessed. When this happens the OERR bit of the RCSTA register is set. The characters already in the FIFO buffer can be read but no additional characters will be received until the error is cleared. The error must be cleared by either clearing the CREN bit of the RCSTA register or by resetting the EUSART by clearing the SPEN bit of the RCSTA register.

23.1.2.6 Receiving 9-bit Characters

The EUSART supports 9-bit character reception. When the RX9 bit of the RCSTA register is set the EUSART will shift nine bits into the RSR for each character received. The RX9D bit of the RCSTA register is the ninth and Most Significant data bit of the top unread character in the receive FIFO. When reading 9-bit data from the receive FIFO buffer, the RX9D data bit must be read before reading the eight Least Significant bits from the RCREG.

23.1.2.7 Address Detection

A special Address Detection mode is available for use when multiple receivers share the same transmission line, such as in RS-485 systems. Address detection is enabled by setting the ADDEN bit of the RCSTA register.

Address detection requires 9-bit character reception. When address detection is enabled, only characters with the ninth data bit set will be transferred to the receive FIFO buffer, thereby setting the RCIF interrupt bit. All other characters will be ignored.

Upon receiving an address character, user software determines if the address matches its own. Upon address match, user software must disable address detection by clearing the ADDEN bit before the next Stop bit occurs. When user software detects the end of the message, determined by the message protocol used, software places the receiver back into the Address Detection mode by setting the ADDEN bit.

23.1.2.8 Asynchronous Reception Set-up:

1. Initialize the SPBRGH, SPBRGL register pair and the BRGH and BRG16 bits to achieve the desired baud rate (see **Section 23.4 "EUSART Baud Rate Generator (BRG)"**).
2. Clear the ANSEL bit for the RX pin (if applicable).
3. Enable the serial port by setting the SPEN bit. The SYNC bit must be clear for asynchronous operation.
4. If interrupts are desired, set the RCIE bit of the PIE1 register and the GIE and PEIE bits of the INTCON register.
5. If 9-bit reception is desired, set the RX9 bit.
6. Enable reception by setting the CREN bit.
7. The RCIF interrupt flag bit will be set when a character is transferred from the RSR to the receive buffer. An interrupt will be generated if the RCIE interrupt enable bit was also set.
8. Read the RCSTA register to get the error flags and, if 9-bit data reception is enabled, the ninth data bit.
9. Get the received eight Least Significant data bits from the receive buffer by reading the RCREG register.
10. If an overrun occurred, clear the OERR flag by clearing the CREN receiver enable bit.

23.1.2.9 9-bit Address Detection Mode Set-up

This mode would typically be used in RS-485 systems. To set up an Asynchronous Reception with Address Detect Enable:

1. Initialize the SPBRGH, SPBRGL register pair and the BRGH and BRG16 bits to achieve the desired baud rate (see **Section 23.4 "EUSART Baud Rate Generator (BRG)"**).
2. Clear the ANSEL bit for the RX pin (if applicable).
3. Enable the serial port by setting the SPEN bit. The SYNC bit must be clear for asynchronous operation.
4. If interrupts are desired, set the RCIE bit of the PIE1 register and the GIE and PEIE bits of the INTCON register.
5. Enable 9-bit reception by setting the RX9 bit.
6. Enable address detection by setting the ADDEN bit.
7. Enable reception by setting the CREN bit.
8. The RCIF interrupt flag bit will be set when a character with the ninth bit set is transferred from the RSR to the receive buffer. An interrupt will be generated if the RCIE interrupt enable bit was also set.
9. Read the RCSTA register to get the error flags. The ninth data bit will always be set.
10. Get the received eight Least Significant data bits from the receive buffer by reading the RCREG register. Software determines if this is the device's address.
11. If an overrun occurred, clear the OERR flag by clearing the CREN receiver enable bit.
12. If the device has been addressed, clear the ADDEN bit to allow all received data into the receive buffer and generate interrupts.

FIGURE 23-5: ASYNCHRONOUS RECEPTION

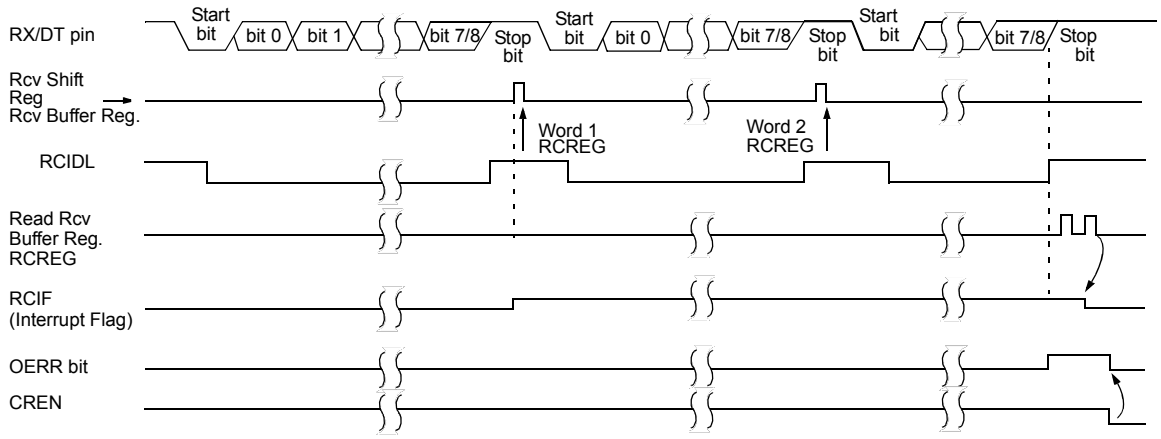

Note: This timing diagram shows three words appearing on the RX input. The RCREG (receive buffer) is read after the third word, causing the OERR (overrun) bit to be set.

 © 2012 Microchip Technology Inc.

TABLE 23-2: SUMMARY OF REGISTERS ASSOCIATED WITH ASYNCHRONOUS RECEPTION

Name	Bit 7	Bit 6	Bit 5	Bit 4	Bit 3	Bit 2	Bit 1	Bit 0	Register on Page
BAUDCON	ABDOVF	RCIDL	—	SCKP	BRG16	—	WUE	ABDEN	269
INTCON	GIE	PEIE	TMR0IE	INTE	IOCIE	TMR0IF	INTF	IOCIF	96
PIE1	TMR1GIE	ADIE(2)	RCIE	TXIE	SSP1IE	—	TMR2IE	TMR1IE	97
PIR1	TMR1GIF	ADIF(2)	RCIF	TXIF	SSP1IF	—	TMR2IF	TMR1IF	99
RCREG	EUSART Receive Data Register								262*
RCSTA	SPEN	RX9	SREN	CREN	ADDEN	FERR	OERR	RX9D	268*
SPBRGL	BRG<7:0>								270*
SPBRGH	BRG<15:8>								270*
TRISC	TRISC7(1)	TRISC6(1)	TRISC5	TRISC4	TRISC3	TRISC2	TRISC1	TRISC0	140
TXSTA	CSRC	TX9	TXEN	SYNC	SENDB	BRGH	TRMT	TX9D	267

Legend: — = unimplemented location, read as '0'. Shaded cells are not used for asynchronous reception.

* Page provides register information.

Note 1: PIC16(L)F1459 only.

2: PIC16(L)F1455/9 only.

23.2 Clock Accuracy with Asynchronous Operation

The factory calibrates the internal oscillator block output (INTOSC). However, the INTOSC frequency may drift as VDD or temperature changes, and this directly affects the asynchronous baud rate. Two methods may be used to adjust the baud rate clock, but both require a reference clock source of some kind.

The first (preferred) method uses the OSCTUNE register to adjust the INTOSC output. Adjusting the value in the OSCTUNE register allows for fine resolution changes to the system clock source. See **Section 5.2.2 "Internal Clock Sources"** for more information.

The other method adjusts the value in the Baud Rate Generator. This can be done automatically with the Auto-Baud Detect feature (see **Section 23.4.1 "Auto-Baud Detect"**). There may not be fine enough resolution when adjusting the Baud Rate Generator to compensate for a gradual change in the peripheral clock frequency.

 © 2012 Microchip Technology Inc.

23.3 Register Definitions: EUSART Control

REGISTER 23-1: TXSTA: TRANSMIT STATUS AND CONTROL REGISTER

R/W-/0	R/W-0/0	R/W-0/0	R/W-0/0	R/W-0/0	R/W-0/0	R-1/1	R/W-0/0
CSRC	TX9	TXEN(1)	SYNC	SENDB	BRGH	TRMT	TX9D
bit 7							bit 0

Legend:		
R = Readable bit	W = Writable bit	U = Unimplemented bit, read as ‘0’
u = Bit is unchanged	x = Bit is unknown	-n/n = Value at POR and BOR/Value at all other Resets
‘1’ = Bit is set	‘0’ = Bit is cleared	

bit 7 **CSRC:** Clock Source Select bit
Asynchronous mode:
Don’t care
Synchronous mode:
1 = Master mode (clock generated internally from BRG)
0 = Slave mode (clock from external source)

bit 6 **TX9:** 9-bit Transmit Enable bit
1 = Selects 9-bit transmission
0 = Selects 8-bit transmission

bit 5 **TXEN:** Transmit Enable bit(1)
1 = Transmit enabled
0 = Transmit disabled

bit 4 **SYNC:** EUSART Mode Select bit
1 = Synchronous mode
0 = Asynchronous mode

bit 3 **SENDB:** Send Break Character bit
Asynchronous mode:
1 = Send Sync Break on next transmission (cleared by hardware upon completion)
0 = Sync Break transmission completed
Synchronous mode:
Don’t care

bit 2 **BRGH:** High Baud Rate Select bit
Asynchronous mode:
1 = High speed
0 = Low speed
Synchronous mode:
Unused in this mode

bit 1 **TRMT:** Transmit Shift Register Status bit
1 = TSR empty
0 = TSR full

bit 0 **TX9D:** Ninth bit of Transmit Data
Can be address/data bit or a parity bit.

Note 1: SREN/CREN overrides TXEN in Sync mode.

REGISTER 23-2: RCSTA: RECEIVE STATUS AND CONTROL REGISTER(1)

R/W-0/0	R/W-0/0	R/W-0/0	R/W-0/0	R/W-0/0	R-0/0	R-0/0	R-0/0
SPEN	RX9	SREN	CREN	ADDEN	FERR	OERR	RX9D
bit 7							bit 0

Legend:		
R = Readable bit	W = Writable bit	U = Unimplemented bit, read as ‘0’
u = Bit is unchanged	x = Bit is unknown	-n/n = Value at POR and BOR/Value at all other Resets
‘1’ = Bit is set	‘0’ = Bit is cleared	

bit 7 **SPEN:** Serial Port Enable bit
1 = Serial port enabled (configures RX/DT and TX/CK pins as serial port pins)
0 = Serial port disabled (held in Reset)

bit 6 **RX9:** 9-bit Receive Enable bit
1 = Selects 9-bit reception
0 = Selects 8-bit reception

bit 5 **SREN:** Single Receive Enable bit
Asynchronous mode:
Don’t care
Synchronous mode – Master:
1 = Enables single receive
0 = Disables single receive
This bit is cleared after reception is complete.
Synchronous mode – Slave
Don’t care

bit 4 **CREN:** Continuous Receive Enable bit
Asynchronous mode:
1 = Enables receiver
0 = Disables receiver
Synchronous mode:
1 = Enables continuous receive until enable bit CREN is cleared (CREN overrides SREN)
0 = Disables continuous receive

bit 3 **ADDEN:** Address Detect Enable bit
Asynchronous mode 9-bit (RX9 = 1):
1 = Enables address detection, enable interrupt and load the receive buffer when RSR<8> is set
0 = Disables address detection, all bytes are received and ninth bit can be used as parity bit
Asynchronous mode 8-bit (RX9 = 0):
Don’t care

bit 2 **FERR:** Framing Error bit
1 = Framing error (can be updated by reading RCREG register and receive next valid byte)
0 = No framing error

bit 1 **OERR:** Overrun Error bit
1 = Overrun error (can be cleared by clearing bit CREN)
0 = No overrun error

bit 0 **RX9D:** Ninth bit of Received Data
This can be address/data bit or a parity bit and must be calculated by user firmware.

 © 2012 Microchip Technology Inc.

REGISTER 23-3: BAUDCON: BAUD RATE CONTROL REGISTER

R-0/0	R-1/1	U-0	R/W-0/0	R/W-0/0	U-0	R/W-0/0	R/W-0/0
ABDOVF	RCIDL	—	SCKP	BRG16	—	WUE	ABDEN
bit 7							bit 0

Legend:		
R = Readable bit	W = Writable bit	U = Unimplemented bit, read as ‘0’
u = Bit is unchanged	x = Bit is unknown	-n/n = Value at POR and BOR/Value at all other Resets
‘1’ = Bit is set	‘0’ = Bit is cleared	

bit 7 **ABDOVF:** Auto-Baud Detect Overflow bit
Asynchronous mode:
1 = Auto-baud timer overflowed
0 = Auto-baud timer did not overflow
Synchronous mode:
Don’t care

bit 6 **RCIDL**: Receive Idle Flag bit
Asynchronous mode:
1 = Receiver is idle
0 = Start bit has been received and the receiver is receiving
Synchronous mode:
Don’t care

bit 5 **Unimplemented:** Read as ‘0’

bit 4 **SCKP**: Synchronous Clock Polarity Select bit
Asynchronous mode:
1 = Transmit inverted data to the TX/CK pin
0 = Transmit non-inverted data to the TX/CK pin
Synchronous mode:
1 = Data is clocked on rising edge of the clock
0 = Data is clocked on falling edge of the clock

bit 3 **BRG16:** 16-bit Baud Rate Generator bit
1 = 16-bit Baud Rate Generator is used
0 = 8-bit Baud Rate Generator is used

bit 2 **Unimplemented:** Read as ‘0’

bit 1 **WUE:** Wake-up Enable bit
Asynchronous mode:
1 = Receiver is waiting for a falling edge. No character will be received, byte RCIF will be set. WUE will automatically clear after RCIF is set.
0 = Receiver is operating normally
Synchronous mode:
Don’t care

bit 0 **ABDEN**: Auto-Baud Detect Enable bit
Asynchronous mode:
1 = Auto-Baud Detect mode is enabled (clears when auto-baud is complete)
0 = Auto-Baud Detect mode is disabled
Synchronous mode:
Don’t care

23.4 EUSART Baud Rate Generator (BRG)

The Baud Rate Generator (BRG) is an 8-bit or 16-bit timer that is dedicated to the support of both the asynchronous and synchronous EUSART operation. By default, the BRG operates in 8-bit mode. Setting the BRG16 bit of the BAUDCON register selects 16-bit mode.

The SPBRGH, SPBRGL register pair determines the period of the free running baud rate timer. In Asynchronous mode the multiplier of the baud rate period is determined by both the BRGH bit of the TXSTA register and the BRG16 bit of the BAUDCON register. In Synchronous mode, the BRGH bit is ignored.

Table 23-3 contains the formulas for determining the baud rate. Example 23-1 provides a sample calculation for determining the baud rate and baud rate error.

Typical baud rates and error values for various Asynchronous modes have been computed for your convenience and are shown in Table 23-3. It may be advantageous to use the high baud rate (BRGH = `1`), or the 16-bit BRG (BRG16 = `1`) to reduce the baud rate error. The 16-bit BRG mode is used to achieve slow baud rates for fast oscillator frequencies.

Writing a new value to the SPBRGH, SPBRGL register pair causes the BRG timer to be reset (or cleared). This ensures that the BRG does not wait for a timer overflow before outputting the new baud rate.

If the system clock is changed during an active receive operation, a receive error or data loss may result. To avoid this problem, check the status of the RCIDL bit to make sure that the receive operation is idle before changing the system clock.

EXAMPLE 23-1: CALCULATING BAUD RATE ERROR

For a device with FOSC of 16 MHz, desired baud rate of 9600, Asynchronous mode, 8-bit BRG:

$$\text{Desired Baud Rate} = \frac{F_{OSC}}{64([SPBRGH:SPBRGL] + 1)}$$

Solving for SPBRGH:SPBRGL:

$$X = \frac{\frac{F_{OSC}}{\text{Desired Baud Rate}}}{64} - 1$$

$$= \frac{\frac{16000000}{9600}}{64} - 1$$

$$= [25.042] = 25$$

$$\text{Calculated Baud Rate} = \frac{16000000}{64(25 + 1)}$$

$$= 9615$$

$$\text{Error} = \frac{\text{Calc. Baud Rate} - \text{Desired Baud Rate}}{\text{Desired Baud Rate}}$$

$$= \frac{(9615 - 9600)}{9600} = 0.16\%$$

 © 2012 Microchip Technology Inc.

TABLE 23-3: BAUD RATE FORMULAS

Configuration Bits			BRG/EUSART Mode	Baud Rate Formula
SYNC	BRG16	BRGH		
0	0	0	8-bit/Asynchronous	FOSC/[64 (n+1)]
0	0	1	8-bit/Asynchronous	FOSC/[16 (n+1)]
0	1	0	16-bit/Asynchronous	
0	1	1	16-bit/Asynchronous	FOSC/[4 (n+1)]
1	0	x	8-bit/Synchronous	
1	1	x	16-bit/Synchronous	

Legend: x = Don't care, n = value of SPBRGH, SPBRGL register pair.

TABLE 23-4: SUMMARY OF REGISTERS ASSOCIATED WITH THE BAUD RATE GENERATOR

Name	Bit 7	Bit 6	Bit 5	Bit 4	Bit 3	Bit 2	Bit 1	Bit 0	Register on Page
BAUDCON	ABDOVF	RCIDL	—	SCKP	BRG16	—	WUE	ABDEN	269
RCSTA	SPEN	RX9	SREN	CREN	ADDEN	FERR	OERR	RX9D	268
SPBRGL	BRG<7:0>								270*
SPBRGH	BRG<15:8>								270*
TXSTA	CSRC	TX9	TXEN	SYNC	SENDB	BRGH	TRMT	TX9D	267

Legend: — = unimplemented location, read as '0'. Shaded cells are not used for the Baud Rate Generator.
* Page provides register information.

TABLE 23-5: BAUD RATES FOR ASYNCHRONOUS MODES

BAUD RATE	SYNC = 0, BRGH = 0, BRG16 = 0											
	Fosc = 20.000 MHz			Fosc = 18.432 MHz			Fosc = 16.000 MHz			Fosc = 11.0592 MHz		
	Actual Rate	% Error	SPBRG value (decimal)	Actual Rate	% Error	SPBRG value (decimal)	Actual Rate	% Error	SPBRG value (decimal)	Actual Rate	% Error	SPBRG value (decimal)
300	—	—	—	—	—	—	—	—	—	—	—	—
1200	1221	1.73	255	1200	0.00	239	1202	0.16	207	1200	0.00	143
2400	2404	0.16	129	2400	0.00	119	2404	0.16	103	2400	0.00	71
9600	9470	-1.36	32	9600	0.00	29	9615	0.16	25	9600	0.00	17
10417	10417	0.00	29	10286	-1.26	27	10417	0.00	23	10165	-2.42	16
19.2k	19.53k	1.73	15	19.20k	0.00	14	19.23k	0.16	12	19.20k	0.00	8
57.6k	—	—	—	57.60k	0.00	7	—	—	—	57.60k	0.00	2
115.2k	—	—	—	—	—	—	—	—	—	—	—	—

BAUD RATE	SYNC = 0, BRGH = 0, BRG16 = 0											
	Fosc = 8.000 MHz			Fosc = 4.000 MHz			Fosc = 3.6864 MHz			Fosc = 1.000 MHz		
	Actual Rate	% Error	SPBRG value (decimal)	Actual Rate	% Error	SPBRG value (decimal)	Actual Rate	% Error	SPBRG value (decimal)	Actual Rate	% Error	SPBRG value (decimal)
300	—	—	—	300	0.16	207	300	0.00	191	300	0.16	51
1200	1202	0.16	103	1202	0.16	51	1200	0.00	47	1202	0.16	12
2400	2404	0.16	51	2404	0.16	25	2400	0.00	23	—	—	—
9600	9615	0.16	12	—	—	—	9600	0.00	5	—	—	—
10417	10417	0.00	11	10417	0.00	5	—	—	—	—	—	—
19.2k	—	—	—	—	—	—	19.20k	0.00	2	—	—	—
57.6k	—	—	—	—	—	—	57.60k	0.00	0	—	—	—
115.2k	—	—	—	—	—	—	—	—	—	—	—	—

BAUD RATE	SYNC = 0, BRGH = 1, BRG16 = 0											
	Fosc = 20.000 MHz			Fosc = 18.432 MHz			Fosc = 16.000 MHz			Fosc = 11.0592 MHz		
	Actual Rate	% Error	SPBRG value (decimal)	Actual Rate	% Error	SPBRG value (decimal)	Actual Rate	% Error	SPBRG value (decimal)	Actual Rate	% Error	SPBRG value (decimal)
300	—	—	—	—	—	—	—	—	—	—	—	—
1200	—	—	—	—	—	—	—	—	—	—	—	—
2400	—	—	—	—	—	—	—	—	—	—	—	—
9600	9615	0.16	129	9600	0.00	119	9615	0.16	103	9600	0.00	71
10417	10417	0.00	119	10378	-0.37	110	10417	0.00	95	10473	0.53	65
19.2k	19.23k	0.16	64	19.20k	0.00	59	19.23k	0.16	51	19.20k	0.00	35
57.6k	56.82k	-1.36	21	57.60k	0.00	19	58.82k	2.12	16	57.60k	0.00	11
115.2k	113.64k	-1.36	10	115.2k	0.00	9	111.1k	-3.55	8	115.2k	0.00	5

 © 2012 Microchip Technology Inc.

TABLE 23-5: BAUD RATES FOR ASYNCHRONOUS MODES (CONTINUED)

BAUD RATE	SYNC = 0, BRGH = 1, BRG16 = 0											
	Fosc = 8.000 MHz			Fosc = 4.000 MHz			Fosc = 3.6864 MHz			Fosc = 1.000 MHz		
	Actual Rate	% Error	SPBRG value (decimal)	Actual Rate	% Error	SPBRG value (decimal)	Actual Rate	% Error	SPBRG value (decimal)	Actual Rate	% Error	SPBRG value (decimal)
300	—	—	—	—	—	—	—	—	—	300	0.16	207
1200	—	—	—	1202	0.16	207	1200	0.00	191	1202	0.16	51
2400	2404	0.16	207	2404	0.16	103	2400	0.00	95	2404	0.16	25
9600	9615	0.16	51	9615	0.16	25	9600	0.00	23	—	—	—
10417	10417	0.00	47	10417	0.00	23	10473	0.53	21	10417	0.00	5
19.2k	19231	0.16	25	19.23k	0.16	12	19.2k	0.00	11	—	—	—
57.6k	55556	-3.55	8	—	—	—	57.60k	0.00	3	—	—	—
115.2k	—	—	—	—	—	—	115.2k	0.00	1	—	—	—

BAUD RATE	SYNC = 0, BRGH = 0, BRG16 = 1											
	Fosc = 20.000 MHz			Fosc = 18.432 MHz			Fosc = 16.000 MHz			Fosc = 11.0592 MHz		
	Actual Rate	% Error	SPBRG value (decimal)	Actual Rate	% Error	SPBRG value (decimal)	Actual Rate	% Error	SPBRG value (decimal)	Actual Rate	% Error	SPBRG value (decimal)
300	300.0	-0.01	4166	300.0	0.00	3839	300.03	0.01	3332	300.0	0.00	2303
1200	1200	-0.03	1041	1200	0.00	959	1200.5	0.04	832	1200	0.00	575
2400	2399	-0.03	520	2400	0.00	479	2398	-0.08	416	2400	0.00	287
9600	9615	0.16	129	9600	0.00	119	9615	0.16	103	9600	0.00	71
10417	10417	0.00	119	10378	-0.37	110	10417	0.00	95	10473	0.53	65
19.2k	19.23k	0.16	64	19.20k	0.00	59	19.23k	0.16	51	19.20k	0.00	35
57.6k	56.818	-1.36	21	57.60k	0.00	19	58.82k	2.12	16	57.60k	0.00	11
115.2k	113.636	-1.36	10	115.2k	0.00	9	111.11k	-3.55	8	115.2k	0.00	5

BAUD RATE	SYNC = 0, BRGH = 0, BRG16 = 1											
	Fosc = 8.000 MHz			Fosc = 4.000 MHz			Fosc = 3.6864 MHz			Fosc = 1.000 MHz		
	Actual Rate	% Error	SPBRG value (decimal)	Actual Rate	% Error	SPBRG value (decimal)	Actual Rate	% Error	SPBRG value (decimal)	Actual Rate	% Error	SPBRG value (decimal)
300	299.9	-0.02	1666	300.1	0.04	832	300.0	0.00	767	300.5	0.16	207
1200	1199	-0.08	416	1202	0.16	207	1200	0.00	191	1202	0.16	51
2400	2404	0.16	207	2404	0.16	103	2400	0.00	95	2404	0.16	25
9600	9615	0.16	51	9615	0.16	25	9600	0.00	23	—	—	—
10417	10417	0.00	47	10417	0.00	23	10473	0.53	21	10417	0.00	5
19.2k	19.23k	0.16	25	19.23k	0.16	12	19.20k	0.00	11	—	—	—
57.6k	55556	-3.55	8	—	—	—	57.60k	0.00	3	—	—	—
115.2k	—	—	—	—	—	—	115.2k	0.00	1	—	—	—

TABLE 23-5: BAUD RATES FOR ASYNCHRONOUS MODES (CONTINUED)

BAUD RATE	SYNC = 0, BRGH = 1, BRG16 = 1 or SYNC = 1, BRG16 = 1											
	FOSC = 20.000 MHz			FOSC = 18.432 MHz			FOSC = 16.000 MHz			FOSC = 11.0592 MHz		
	Actual Rate	% Error	SPBRG value (decimal)	Actual Rate	% Error	SPBRG value (decimal)	Actual Rate	% Error	SPBRG value (decimal)	Actual Rate	% Error	SPBRG value (decimal)
300	300.0	0.00	16665	300.0	0.00	15359	300.0	0.00	13332	300.0	0.00	9215
1200	1200	-0.01	4166	1200	0.00	3839	1200.1	0.01	3332	1200	0.00	2303
2400	2400	0.02	2082	2400	0.00	1919	2399.5	-0.02	1666	2400	0.00	1151
9600	9597	-0.03	520	9600	0.00	479	9592	-0.08	416	9600	0.00	287
10417	10417	0.00	479	10425	0.08	441	10417	0.00	383	10433	0.16	264
19.2k	19.23k	0.16	259	19.20k	0.00	239	19.23k	0.16	207	19.20k	0.00	143
57.6k	57.47k	-0.22	86	57.60k	0.00	79	57.97k	0.64	68	57.60k	0.00	47
115.2k	116.3k	0.94	42	115.2k	0.00	39	114.29k	-0.79	34	115.2k	0.00	23

BAUD RATE	SYNC = 0, BRGH = 1, BRG16 = 1 or SYNC = 1, BRG16 = 1											
	FOSC = 8.000 MHz			FOSC = 4.000 MHz			FOSC = 3.6864 MHz			FOSC = 1.000 MHz		
	Actual Rate	% Error	SPBRG value (decimal)	Actual Rate	% Error	SPBRG value (decimal)	Actual Rate	% Error	SPBRG value (decimal)	Actual Rate	% Error	SPBRG value (decimal)
300	300.0	0.00	6666	300.0	0.01	3332	300.0	0.00	3071	300.1	0.04	832
1200	1200	-0.02	1666	1200	0.04	832	1200	0.00	767	1202	0.16	207
2400	2401	0.04	832	2398	0.08	416	2400	0.00	383	2404	0.16	103
9600	9615	0.16	207	9615	0.16	103	9600	0.00	95	9615	0.16	25
10417	10417	0	191	10417	0.00	95	10473	0.53	87	10417	0.00	23
19.2k	19.23k	0.16	103	19.23k	0.16	51	19.20k	0.00	47	19.23k	0.16	12
57.6k	57.14k	-0.79	34	58.82k	2.12	16	57.60k	0.00	15	—	—	—
115.2k	117.6k	2.12	16	111.1k	-3.55	8	115.2k	0.00	7	—	—	—

 © 2012 Microchip Technology Inc.

23.4.1 AUTO-BAUD DETECT

The EUSART module supports automatic detection and calibration of the baud rate.

In the Auto-Baud Detect (ABD) mode, the clock to the BRG is reversed. Rather than the BRG clocking the incoming RX signal, the RX signal is timing the BRG. The Baud Rate Generator is used to time the period of a received 55h (ASCII "U") which is the Sync character for the LIN bus. The unique feature of this character is that it has five rising edges including the Stop bit edge.

Setting the ABDEN bit of the BAUDCON register starts the auto-baud calibration sequence (Figure 23-6). While the ABD sequence takes place, the EUSART state machine is held in Idle. On the first rising edge of the receive line, after the Start bit, the SPBRG begins counting up using the BRG counter clock as shown in Table 23-6. The fifth rising edge will occur on the RX pin at the end of the eighth bit period. At that time, an accumulated value totaling the proper BRG period is left in the SPBRGH, SPBRGL register pair, the ABDEN bit is automatically cleared and the RCIF interrupt flag is set. The value in the RCREG needs to be read to clear the RCIF interrupt. RCREG content should be discarded. When calibrating for modes that do not use the SPBRGH register the user can verify that the SPBRGL register did not overflow by checking for 00h in the SPBRGH register.

The BRG auto-baud clock is determined by the BRG16 and BRGH bits as shown in Table 23-6. During ABD, both the SPBRGH and SPBRGL registers are used as a 16-bit counter, independent of the BRG16 bit setting. While calibrating the baud rate period, the SPBRGH and SPBRGL registers are clocked at 1/8th the BRG base clock rate. The resulting byte measurement is the average bit time when clocked at full speed.

Note 1: If the WUE bit is set with the ABDEN bit, auto-baud detection will occur on the byte following the Break character (see **Section 23.4.3 "Auto-Wake-up on Break"**).

2: It is up to the user to determine that the incoming character baud rate is within the range of the selected BRG clock source. Some combinations of oscillator frequency and EUSART baud rates are not possible.

3: During the auto-baud process, the auto-baud counter starts counting at one. Upon completion of the auto-baud sequence, to achieve maximum accuracy, subtract one from the SPBRGH:SPBRGL register pair.

TABLE 23-6: BRG COUNTER CLOCK RATES

BRG16	BRGH	BRG Base Clock	BRG ABD Clock
0	0	FOSC/64	FOSC/512
0	1	FOSC/16	FOSC/128
1	0	FOSC/16	FOSC/128
1	1	FOSC/4	FOSC/32

Note: During the ABD sequence, SPBRGL and SPBRGH registers are both used as a 16-bit counter, independent of BRG16 setting.

FIGURE 23-6: AUTOMATIC BAUD RATE CALIBRATION

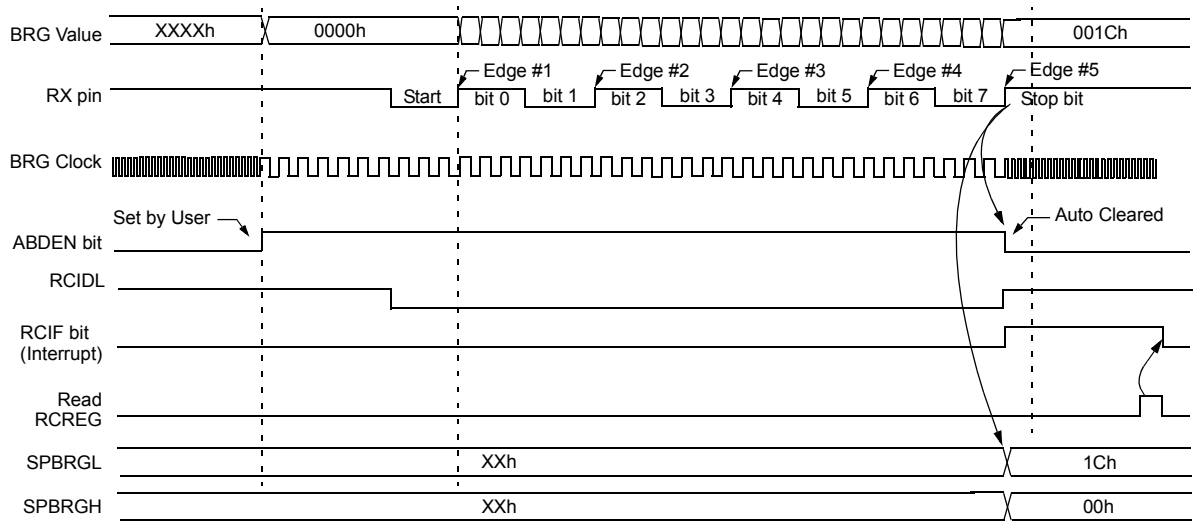

Note 1: The ABD sequence requires the **EUSART** module to be configured in Asynchronous mode.

23.4.2 AUTO-BAUD OVERFLOW

During the course of automatic baud detection, the ABDOVF bit of the BAUDCON register will be set if the baud rate counter overflows before the fifth rising edge is detected on the RX pin. The ABDOVF bit indicates that the counter has exceeded the maximum count that can fit in the 16 bits of the SPBRGH:SPBRGL register pair. After the ABDOVF bit has been set, the counter continues to count until the fifth rising edge is detected on the RX pin. Upon detecting the fifth RX edge, the hardware will set the RCIF interrupt flag and clear the ABDEN bit of the BAUDCON register. The RCIF flag can be subsequently cleared by reading the RCREG register. The ABDOVF flag of the BAUDCON register can be cleared by software directly.

To terminate the auto-baud process before the RCIF flag is set, clear the ABDEN bit then clear the ABDOVF bit of the BAUDCON register. The ABDOVF bit will remain set if the ABDEN bit is not cleared first.

23.4.3 AUTO-WAKE-UP ON BREAK

During Sleep mode, all clocks to the EUSART are suspended. Because of this, the Baud Rate Generator is inactive and a proper character reception cannot be performed. The Auto-Wake-up feature allows the controller to wake-up due to activity on the RX/DT line. This feature is available only in Asynchronous mode.

The Auto-Wake-up feature is enabled by setting the WUE bit of the BAUDCON register. Once set, the normal receive sequence on RX/DT is disabled, and the EUSART remains in an Idle state, monitoring for a wake-up event independent of the CPU mode. A wake-up event consists of a high-to-low transition on the RX/DT line. (This coincides with the start of a Sync Break or a wake-up signal character for the LIN protocol.)

The EUSART module generates an RCIF interrupt coincident with the wake-up event. The interrupt is generated synchronously to the Q clocks in normal CPU operating modes (Figure 23-7), and asynchronously if the device is in Sleep mode (Figure 23-8). The interrupt condition is cleared by reading the RCREG register.

The WUE bit is automatically cleared by the low-to-high transition on the RX line at the end of the Break. This signals to the user that the Break event is over. At this point, the EUSART module is in Idle mode waiting to receive the next character.

23.4.3.1 Special Considerations

Break Character

To avoid character errors or character fragments during a wake-up event, the wake-up character must be all zeros.

When the wake-up is enabled the function works independent of the low time on the data stream. If the WUE bit is set and a valid non-zero character is received, the low time from the Start bit to the first rising edge will be interpreted as the wake-up event. The remaining bits in the character will be received as a fragmented character and subsequent characters can result in framing or overrun errors.

Therefore, the initial character in the transmission must be all '0's. This must be ten or more bit times, 13-bit times recommended for LIN bus, or any number of bit times for standard RS-232 devices.

Oscillator Start-up Time

Oscillator start-up time must be considered, especially in applications using oscillators with longer start-up intervals (i.e., LP, XT or HS/PLL mode). The Sync Break (or wake-up signal) character must be of sufficient length, and be followed by a sufficient interval, to allow enough time for the selected oscillator to start and provide proper initialization of the EUSART.

WUE Bit

The wake-up event causes a receive interrupt by setting the RCIF bit. The WUE bit is cleared in hardware by a rising edge on RX/DT. The interrupt condition is then cleared in software by reading the RCREG register and discarding its contents.

To ensure that no actual data is lost, check the RCIDL bit to verify that a receive operation is not in process before setting the WUE bit. If a receive operation is not occurring, the WUE bit may then be set just prior to entering the Sleep mode.

 © 2012 Microchip Technology Inc.

FIGURE 23-7: AUTO-WAKE-UP BIT (WUE) TIMING DURING NORMAL OPERATION

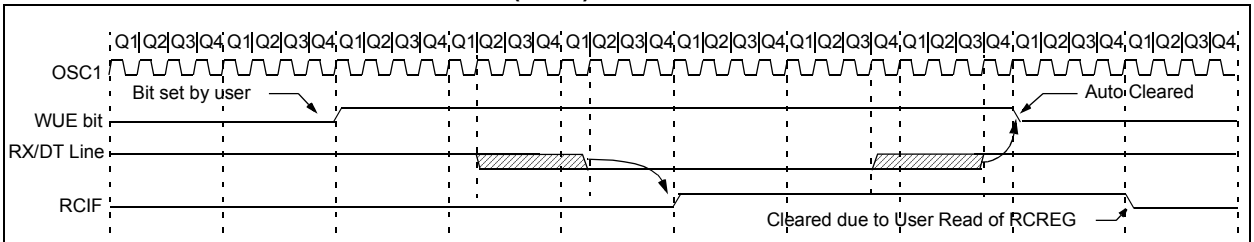

Note 1: The **EUSART** remains in Idle while the WUE bit is set.

FIGURE 23-8: AUTO-WAKE-UP BIT (WUE) TIMINGS DURING SLEEP

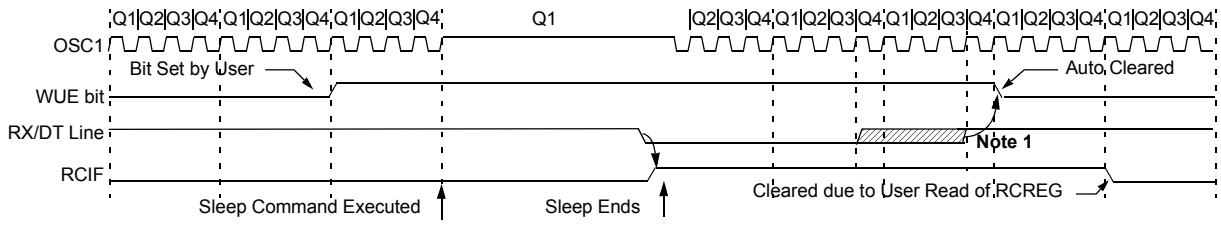

Note 1: If the wake-up event requires long oscillator warm-up time, the automatic clearing of the WUE bit can occur while the `stposc` signal is still active. This sequence should not depend on the presence of Q clocks.

2: The **EUSART** remains in Idle while the WUE bit is set.

23.4.4 BREAK CHARACTER SEQUENCE

The EUSART module has the capability of sending the special Break character sequences that are required by the LIN bus standard. A Break character consists of a Start bit, followed by 12 '0' bits and a Stop bit.

To send a Break character, set the SENDB and TXEN bits of the TXSTA register. The Break character transmission is then initiated by a write to the TXREG. The value of data written to TXREG will be ignored and all '0's will be transmitted.

The SENDB bit is automatically reset by hardware after the corresponding Stop bit is sent. This allows the user to preload the transmit FIFO with the next transmit byte following the Break character (typically, the Sync character in the LIN specification).

The TRMT bit of the TXSTA register indicates when the transmit operation is active or idle, just as it does during normal transmission. See Figure 23-9 for the timing of the Break character sequence.

23.4.4.1 Break and Sync Transmit Sequence

The following sequence will start a message frame header made up of a Break, followed by an auto-baud Sync byte. This sequence is typical of a LIN bus master.

1. Configure the EUSART for the desired mode.
2. Set the TXEN and SENDB bits to enable the Break sequence.
3. Load the TXREG with a dummy character to initiate transmission (the value is ignored).
4. Write '55h' to TXREG to load the Sync character into the transmit FIFO buffer.
5. After the Break has been sent, the SENDB bit is reset by hardware and the Sync character is then transmitted.

When the TXREG becomes empty, as indicated by the TXIF, the next data byte can be written to TXREG.

23.4.5 RECEIVING A BREAK CHARACTER

The Enhanced EUSART module can receive a Break character in two ways.

The first method to detect a Break character uses the FERR bit of the RCSTA register and the Received data as indicated by RCREG. The Baud Rate Generator is assumed to have been initialized to the expected baud rate.

A Break character has been received when;

- RCIF bit is set
- FERR bit is set
- RCREG = 00h

The second method uses the Auto-Wake-up feature described in **Section 23.4.3 "Auto-Wake-up on Break"**. By enabling this feature, the EUSART will sample the next two transitions on RX/DT, cause an RCIF interrupt, and receive the next data byte followed by another interrupt.

Note that following a Break character, the user will typically want to enable the Auto-Baud Detect feature. For both methods, the user can set the ABDEN bit of the BAUDCON register before placing the EUSART in Sleep mode.

FIGURE 23-9: SEND BREAK CHARACTER SEQUENCE

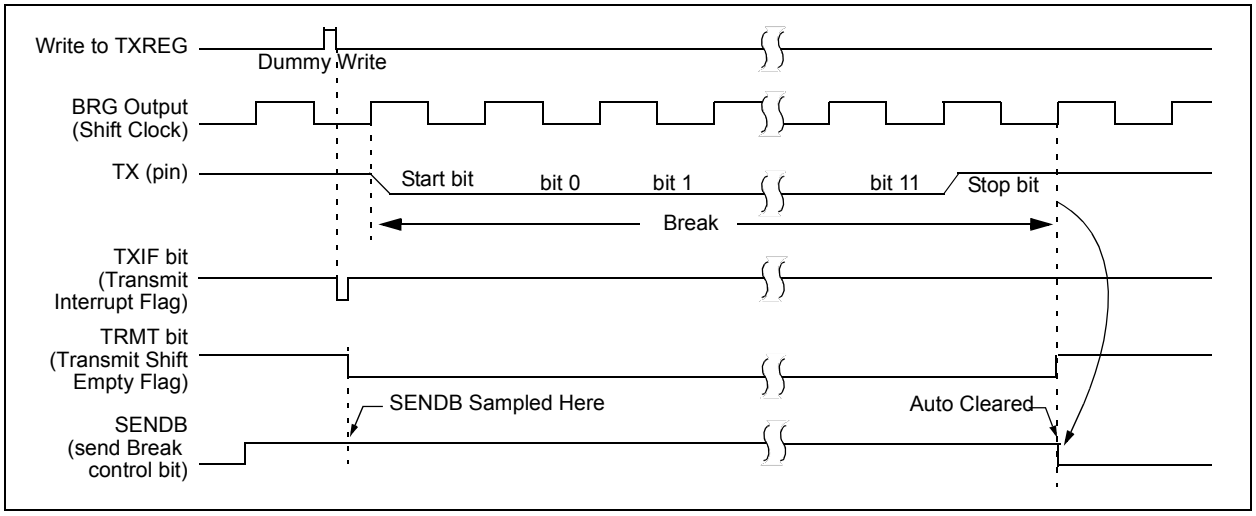

 © 2012 Microchip Technology Inc.

23.5 EUSART Synchronous Mode

Synchronous serial communications are typically used in systems with a single master and one or more slaves. The master device contains the necessary circuitry for baud rate generation and supplies the clock for all devices in the system. Slave devices can take advantage of the master clock by eliminating the internal clock generation circuitry.

There are two signal lines in Synchronous mode: a bidirectional data line and a clock line. Slaves use the external clock supplied by the master to shift the serial data into and out of their respective receive and transmit shift registers. Since the data line is bidirectional, synchronous operation is half-duplex only. Half-duplex refers to the fact that master and slave devices can receive and transmit data but not both simultaneously. The EUSART can operate as either a master or slave device.

Start and Stop bits are not used in synchronous transmissions.

23.5.1 SYNCHRONOUS MASTER MODE

The following bits are used to configure the EUSART for synchronous master operation:

- SYNC = 1
- CSRC = 1
- SREN = 0 (for transmit); SREN = 1 (for receive)
- CREN = 0 (for transmit); CREN = 1 (for receive)
- SPEN = 1

Setting the SYNC bit of the TXSTA register configures the device for synchronous operation. Setting the CSRC bit of the TXSTA register configures the device as a master. Clearing the SREN and CREN bits of the RCSTA register ensures that the device is in the Transmit mode; otherwise, the device will be configured to receive. Setting the SPEN bit of the RCSTA register enables the EUSART.

23.5.1.1 Master Clock

Synchronous data transfers use a separate clock line, which is synchronous with the data. A device configured as a master transmits the clock on the TX/CK line. The TX/CK pin output driver is automatically enabled when the EUSART is configured for synchronous transmit or receive operation. Serial data bits change on the leading edge to ensure they are valid at the trailing edge of each clock. One clock cycle is generated for each data bit. Only as many clock cycles are generated as there are data bits.

23.5.1.2 Clock Polarity

A clock polarity option is provided for Microwire compatibility. Clock polarity is selected with the SCKP bit of the BAUDCON register. Setting the SCKP bit sets the clock Idle state as high. When the SCKP bit is set, the data changes on the falling edge of each clock. Clearing the SCKP bit sets the Idle state as low. When the SCKP bit is cleared, the data changes on the rising edge of each clock.

23.5.1.3 Synchronous Master Transmission

Data is transferred out of the device on the RX/DT pin. The RX/DT and TX/CK pin output drivers are automatically enabled when the EUSART is configured for synchronous master transmit operation.

A transmission is initiated by writing a character to the TXREG register. If the TSR still contains all or part of a previous character, the new character data is held in the TXREG until the last bit of the previous character has been transmitted. If this is the first character, or the previous character has been completely flushed from the TSR, the data in the TXREG is immediately transferred to the TSR. The transmission of the character commences immediately following the transfer of the data to the TSR from the TXREG.

Each data bit changes on the leading edge of the master clock and remains valid until the subsequent leading clock edge.

Note:	The TSR register is not mapped in data memory so it is not available to the user.

23.5.1.4 Synchronous Master Transmission Set-up:

1. Initialize the SPBRGH, SPBRGL register pair and the BRGH and BRG16 bits to achieve the desired baud rate (see **Section 23.4 "EUSART Baud Rate Generator (BRG)"**).
2. Enable the synchronous master serial port by setting bits SYNC, SPEN and CSRC.
3. Disable Receive mode by clearing bits SREN and CREN.
4. Enable Transmit mode by setting the TXEN bit.
5. If 9-bit transmission is desired, set the TX9 bit.
6. If interrupts are desired, set the TXIE bit of the PIE1 register and the GIE and PEIE bits of the INTCON register.
7. If 9-bit transmission is selected, the ninth bit should be loaded in the TX9D bit.
8. Start transmission by loading data to the TXREG register.

FIGURE 23-10: SYNCHRONOUS TRANSMISSION

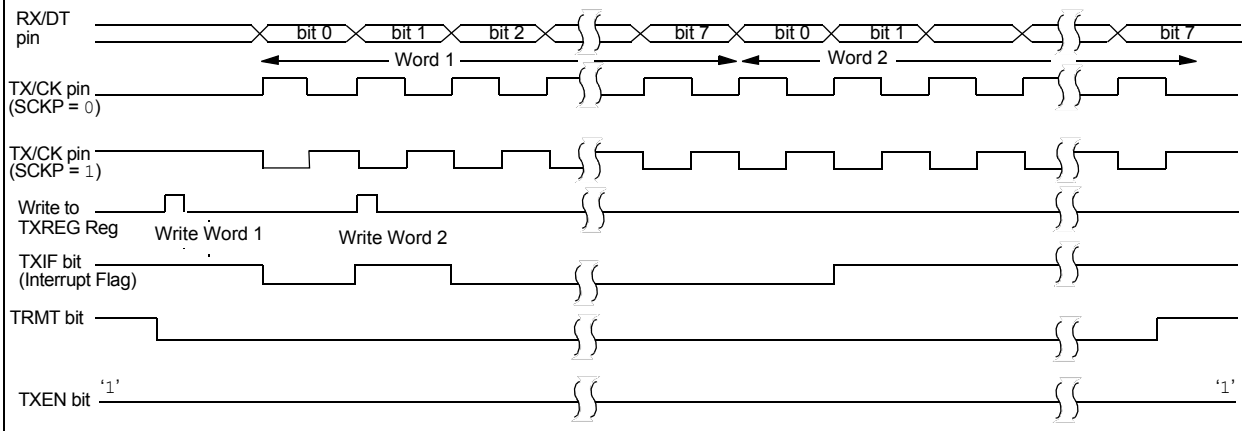

Note: Sync Master mode, SPBRGL = 0, continuous transmission of two 8-bit words.

FIGURE 23-11: SYNCHRONOUS TRANSMISSION (THROUGH TXEN)

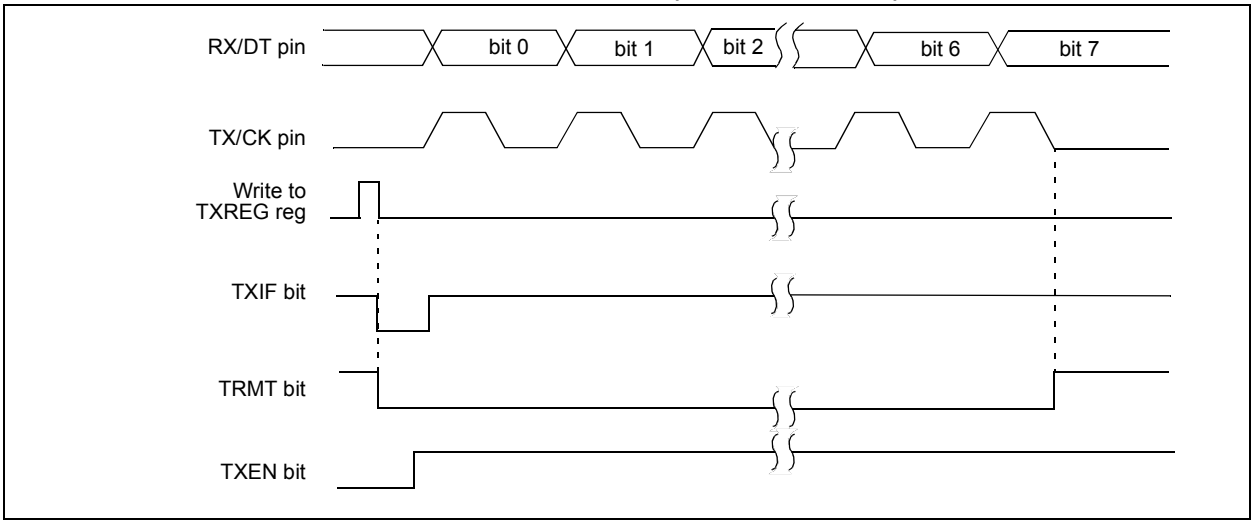

TABLE 23-7: SUMMARY OF REGISTERS ASSOCIATED WITH SYNCHRONOUS MASTER TRANSMISSION

Name	Bit 7	Bit 6	Bit 5	Bit 4	Bit 3	Bit 2	Bit 1	Bit 0	Register on Page
BAUDCON	ABDOVF	RCIDL	—	SCKP	BRG16	—	WUE	ABDEN	269
INTCON	GIE	PEIE	TMR0IE	INTE	IOCIE	TMR0IF	INTF	IOCIF	96
PIE1	TMR1GIE	ADIE(2)	RCIE	TXIE	SSP1IE	—	TMR2IE	TMR1IE	97
PIR1	TMR1GIF	ADIF(2)	RCIF	TXIF	SSP1IF	—	TMR2IF	TMR1IF	99
RCSTA	SPEN	RX9	SREN	CREN	ADDEN	FERR	OERR	RX9D	268
SPBRGL	BRG<7:0>								270*
SPBRGH	BRG<15:8>								270*
TRISC	TRISC7(1)	TRISC6(1)	TRISC5	TRISC4	TRISC3	TRISC2	TRISC1	TRISC0	140
TXREG	EUSART Transmit Data Register								259*
TXSTA	CSRC	TX9	TXEN	SYNC	SENDB	BRGH	TRMT	TX9D	267

Legend: — = unimplemented location, read as '0'. Shaded cells are not used for synchronous master transmission.
* Page provides register information.

Note 1: PIC16(L)F1459 only.

2: PIC16(L)F1455/9 only.

 © 2012 Microchip Technology Inc.

23.5.1.5 Synchronous Master Reception

Data is received at the RX/DT pin. The RX/DT pin output driver is automatically disabled when the EUSART is configured for synchronous master receive operation.

In Synchronous mode, reception is enabled by setting either the Single Receive Enable bit (SREN of the RCSTA register) or the Continuous Receive Enable bit (CREN of the RCSTA register).

When SREN is set and CREN is clear, only as many clock cycles are generated as there are data bits in a single character. The SREN bit is automatically cleared at the completion of one character. When CREN is set, clocks are continuously generated until CREN is cleared. If CREN is cleared in the middle of a character, the CK clock stops immediately and the partial character is discarded. If SREN and CREN are both set, then SREN is cleared at the completion of the first character and CREN takes precedence.

To initiate reception, set either SREN or CREN. Data is sampled at the RX/DT pin on the trailing edge of the TX/CK clock pin and is shifted into the Receive Shift Register (RSR). When a complete character is received into the RSR, the RCIF bit is set and the character is automatically transferred to the two character receive FIFO. The Least Significant eight bits of the top character in the receive FIFO are available in RCREG. The RCIF bit remains set as long as there are unread characters in the receive FIFO.

Note:	If the RX/DT function is on an analog pin, the corresponding ANSEL bit must be cleared for the receiver to function.

23.5.1.6 Slave Clock

Synchronous data transfers use a separate clock line, which is synchronous with the data. A device configured as a slave receives the clock on the TX/CK line. The TX/CK pin output driver is automatically disabled when the device is configured for synchronous slave transmit or receive operation. Serial data bits change on the leading edge to ensure they are valid at the trailing edge of each clock. One data bit is transferred for each clock cycle. Only as many clock cycles should be received as there are data bits.

Note:	If the device is configured as a slave and the TX/CK function is on an analog pin, the corresponding ANSEL bit must be cleared.

23.5.1.7 Receive Overrun Error

The receive FIFO buffer can hold two characters. An overrun error will be generated if a third character, in its entirety, is received before RCREG is read to access the FIFO. When this happens, the OERR bit of the RCSTA register is set. Previous data in the FIFO will not be overwritten. The two characters in the FIFO buffer can be read; however, no additional characters will be received until the error is cleared. The OERR bit can only be cleared by clearing the overrun condition. If the overrun error occurred when the SREN bit is set and CREN is clear, then the error is cleared by reading RCREG. If the overrun occurred when the CREN bit is set, then the error condition is cleared by either clearing the CREN bit of the RCSTA register, or by clearing the SPEN bit which resets the EUSART.

23.5.1.8 Receiving 9-bit Characters

The EUSART supports 9-bit character reception. When the RX9 bit of the RCSTA register is set, the EUSART will shift 9 bits into the RSR for each character received. The RX9D bit of the RCSTA register is the ninth, and Most Significant, data bit of the top unread character in the receive FIFO. When reading 9-bit data from the receive FIFO buffer, the RX9D data bit must be read before reading the eight Least Significant bits from the RCREG.

23.5.1.9 Synchronous Master Reception Set-up:

1. Initialize the SPBRGH, SPBRGL register pair for the appropriate baud rate. Set or clear the BRGH and BRG16 bits, as required, to achieve the desired baud rate.
2. Clear the ANSEL bit for the RX pin (if applicable).
3. Enable the synchronous master serial port by setting bits SYNC, SPEN and CSRC.
4. Ensure bits CREN and SREN are clear.
5. If interrupts are desired, set the RCIE bit of the PIE1 register and the GIE and PEIE bits of the INTCON register.
6. If 9-bit reception is desired, set bit RX9.
7. Start reception by setting the SREN bit or, for continuous reception, set the CREN bit.
8. Interrupt flag bit RCIF will be set when reception of a character is complete. An interrupt will be generated if the enable bit RCIE was set.
9. Read the RCSTA register to get the ninth bit (if enabled) and determine if any error occurred during reception.
10. Read the 8-bit received data by reading the RCREG register.
11. If an overrun error occurs, clear the error by either clearing the CREN bit of the RCSTA register or by clearing the SPEN bit which resets the EUSART.

FIGURE 23-12: SYNCHRONOUS RECEPTION (MASTER MODE, SREN)

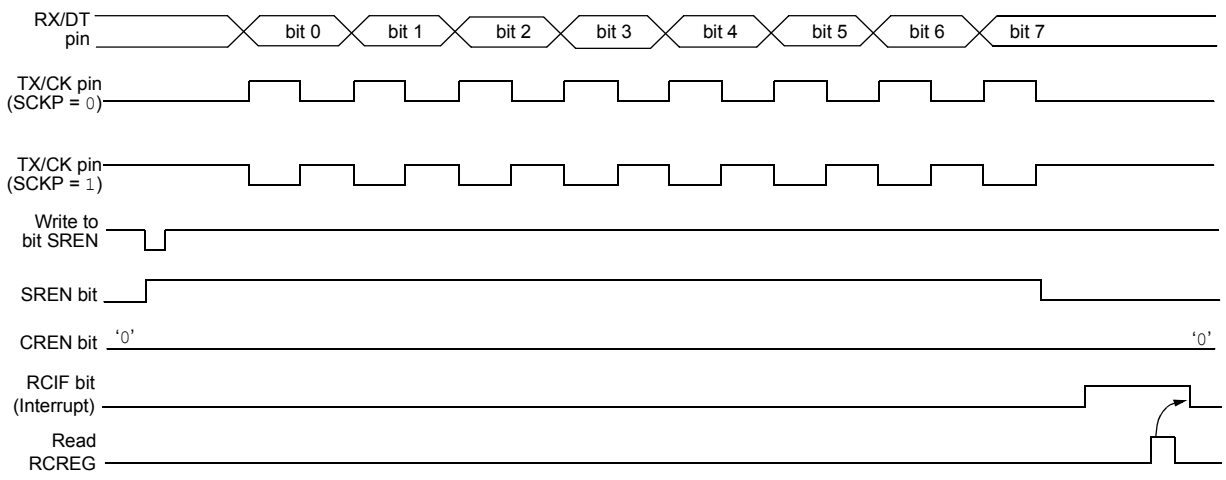

Note: Timing diagram demonstrates Sync Master mode with bit SREN = 1 and bit BRGH = 0.

TABLE 23-8: SUMMARY OF REGISTERS ASSOCIATED WITH SYNCHRONOUS MASTER RECEPTION

Name	Bit 7	Bit 6	Bit 5	Bit 4	Bit 3	Bit 2	Bit 1	Bit 0	Register on Page
BAUDCON	ABDOVF	RCIDL	—	SCKP	BRG16	—	WUE	ABDEN	269
INTCON	GIE	PEIE	TMR0IE	INTE	IOCIE	TMR0IF	INTF	IOCIF	96
PIE1	TMR1GIE	ADIE(2)	RCIE	TXIE	SSP1IE	—	TMR2IE	TMR1IE	97
PIR1	TMR1GIF	ADIF(2)	RCIF	TXIF	SSP1IF	—	TMR2IF	TMR1IF	99
RCREG	EUSART Receive Data Register								262*
RCSTA	SPEN	RX9	SREN	CREN	ADDEN	FERR	OERR	RX9D	268
SPBRGL	BRG<7:0>								270*
SPBRGH	BRG<15:8>								270*
TRISC	TRISC7(1)	TRISC6(1)	TRISC5	TRISC4	TRISC3	TRISC2	TRISC1	TRISC0	140
TXSTA	CSRC	TX9	TXEN	SYNC	SENDB	BRGH	TRMT	TX9D	267

Legend: — = unimplemented location, read as '0'. Shaded cells are not used for synchronous master reception.
* Page provides register information.

Note 1: PIC16(L)F1459 only.
2: PIC16(L)F1455/9 only.

 © 2012 Microchip Technology Inc.

23.5.2 SYNCHRONOUS SLAVE MODE

The following bits are used to configure the EUSART for synchronous slave operation:

- SYNC = 1
- CSRC = 0
- SREN = 0 (for transmit); SREN = 1 (for receive)
- CREN = 0 (for transmit); CREN = 1 (for receive)
- SPEN = 1

Setting the SYNC bit of the TXSTA register configures the device for synchronous operation. Clearing the CSRC bit of the TXSTA register configures the device as a slave. Clearing the SREN and CREN bits of the RCSTA register ensures that the device is in the Transmit mode; otherwise, the device will be configured to receive. Setting the SPEN bit of the RCSTA register enables the EUSART.

23.5.2.1 EUSART Synchronous Slave Transmit

The operation of the Synchronous Master and Slave modes are identical (see **Section 23.5.1.3 "Synchronous Master Transmission"**), except in the case of the Sleep mode.

If two words are written to the TXREG and then the SLEEP instruction is executed, the following will occur:

1. The first character will immediately transfer to the TSR register and transmit.
2. The second word will remain in the TXREG register.
3. The TXIF bit will not be set.
4. After the first character has been shifted out of TSR, the TXREG register will transfer the second character to the TSR and the TXIF bit will now be set.
5. If the PEIE and TXIE bits are set, the interrupt will wake the device from Sleep and execute the next instruction. If the GIE bit is also set, the program will call the Interrupt Service Routine.

23.5.2.2 Synchronous Slave Transmission Set-up:

1. Set the SYNC and SPEN bits and clear the CSRC bit.
2. Clear the ANSEL bit for the CK pin (if applicable).
3. Clear the CREN and SREN bits.
4. If interrupts are desired, set the TXIE bit of the PIE1 register, and the GIE and PEIE bits of the INTCON register.
5. If 9-bit transmission is desired, set the TX9 bit.
6. Enable transmission by setting the TXEN bit.
7. If 9-bit transmission is selected, insert the Most Significant bit into the TX9D bit.
8. Start transmission by writing the Least Significant 8 bits to the TXREG register.

TABLE 23-9: SUMMARY OF REGISTERS ASSOCIATED WITH SYNCHRONOUS SLAVE TRANSMISSION

Name	Bit 7	Bit 6	Bit 5	Bit 4	Bit 3	Bit 2	Bit 1	Bit 0	Register on Page
BAUDCON	ABDOVF	RCIDL	—	SCKP	BRG16	—	WUE	ABDEN	269
INTCON	GIE	PEIE	TMR0IE	INTE	IOCIE	TMR0IF	INTF	IOCIF	96
PIE1	TMR1GIE	ADIE(2)	RCIE	TXIE	SSP1IE	—	TMR2IE	TMR1IE	97
PIR1	TMR1GIF	ADIF(2)	RCIF	TXIF	SSP1IF	—	TMR2IF	TMR1IF	99
RCSTA	SPEN	RX9	SREN	CREN	ADDEN	FERR	OERR	RX9D	268
TRISC	TRISC7(1)	TRISC6(1)	TRISC5	TRISC4	TRISC3	TRISC2	TRISC1	TRISC0	140
TXREG	EUSART Transmit Data Register								259*
TXSTA	CSRC	TX9	TXEN	SYNC	SENDB	BRGH	TRMT	TX9D	267

Legend: — = unimplemented location, read as '0'. Shaded cells are not used for synchronous slave transmission.
* Page provides register information.

Note 1: PIC16(L)F1459 only.
2: PIC16(L)F1455/9 only.

23.5.2.3 EUSART Synchronous Slave Reception

The operation of the Synchronous Master and Slave modes is identical (**Section 23.5.1.5 "Synchronous Master Reception"**), with the following exceptions:

- Sleep
- CREN bit is always set, therefore the receiver is never idle
- SREN bit, which is a "don't care" in Slave mode

A character may be received while in Sleep mode by setting the CREN bit prior to entering Sleep. Once the word is received, the RSR register will transfer the data to the RCREG register. If the RCIE enable bit is set, the interrupt generated will wake the device from Sleep and execute the next instruction. If the GIE bit is also set, the program will branch to the interrupt vector.

23.5.2.4 Synchronous Slave Reception Set-up:

1. Set the SYNC and SPEN bits and clear the CSRC bit.
2. Clear the ANSEL bit for both the CK and DT pins (if applicable).
3. If interrupts are desired, set the RCIE bit of the PIE1 register, and the GIE and PEIE bits of the INTCON register.
4. If 9-bit reception is desired, set the RX9 bit.
5. Set the CREN bit to enable reception.
6. The RCIF bit will be set when reception is complete. An interrupt will be generated if the RCIE bit was set.
7. If 9-bit mode is enabled, retrieve the Most Significant bit from the RX9D bit of the RCSTA register.
8. Retrieve the 8 Least Significant bits from the receive FIFO by reading the RCREG register.
9. If an overrun error occurs, clear the error by either clearing the CREN bit of the RCSTA register or by clearing the SPEN bit which resets the EUSART.

TABLE 23-10: SUMMARY OF REGISTERS ASSOCIATED WITH SYNCHRONOUS SLAVE RECEPTION

Name	Bit 7	Bit 6	Bit 5	Bit 4	Bit 3	Bit 2	Bit 1	Bit 0	Register on Page
BAUDCON	ABDOVF	RCIDL	—	SCKP	BRG16	—	WUE	ABDEN	269
INTCON	GIE	PEIE	TMR0IE	INTE	IOCIE	TMR0IF	INTF	IOCIF	96
PIE1	TMR1GIE	ADIE(2)	RCIE	TXIE	SSP1IE	—	TMR2IE	TMR1IE	97
PIR1	TMR1GIF	ADIF(2)	RCIF	TXIF	SSP1IF	—	TMR2IF	TMR1IF	99
RCREG	EUSART Receive Data Register								262*
RCSTA	SPEN	RX9	SREN	CREN	ADDEN	FERR	OERR	RX9D	268
TRISC	TRISC7(1)	TRISC6(1)	TRISC5	TRISC4	TRISC3	TRISC2	TRISC1	TRISC0	140
TXSTA	CSRC	TX9	TXEN	SYNC	SENDB	BRGH	TRMT	TX9D	267

Legend: — = unimplemented location, read as '0'. Shaded cells are not used for synchronous slave reception.
* Page provides register information.

Note 1: PIC16(L)F1459 only.
2: PIC16(L)F1455/9 only.

 © 2012 Microchip Technology Inc.

23.6 EUSART Operation During Sleep

The EUSART will remain active during Sleep only in the Synchronous Slave mode. All other modes require the system clock and therefore cannot generate the necessary signals to run the Transmit or Receive Shift registers during Sleep.

Synchronous Slave mode uses an externally generated clock to run the Transmit and Receive Shift registers.

23.6.1 SYNCHRONOUS RECEIVE DURING SLEEP

To receive during Sleep, all the following conditions must be met before entering Sleep mode:

- RCSTA and TXSTA Control registers must be configured for Synchronous Slave Reception (see **Section 23.5.2.4 "Synchronous Slave Reception Set-up:"**).
- If interrupts are desired, set the RCIE bit of the PIE1 register, and the GIE and PEIE bits of the INTCON register.
- The RCIF interrupt flag must be cleared by reading RCREG to unload any pending characters in the receive buffer.

Upon entering Sleep mode, the device will be ready to accept data and clocks on the RX/DT and TX/CK pins, respectively. When the data word has been completely clocked in by the external device, the RCIF interrupt flag bit of the PIR1 register will be set. Thereby, waking the processor from Sleep.

Upon waking from Sleep, the instruction following the `SLEEP` instruction will be executed. If the Global Interrupt Enable (GIE) bit of the INTCON register is also set, then the Interrupt Service Routine at address 004h will be called.

23.6.2 SYNCHRONOUS TRANSMIT DURING SLEEP

To transmit during Sleep, all the following conditions must be met before entering Sleep mode:

- RCSTA and TXSTA Control registers must be configured for synchronous slave transmission (see **Section 23.5.2.2 "Synchronous Slave Transmission Set-up:"**).
- The TXIF interrupt flag must be cleared by writing the output data to the TXREG, thereby filling the TSR and transmit buffer.
- If interrupts are desired, set the TXIE bit of the PIE1 register and the PEIE bit of the INTCON register.
- Interrupt enable bits TXIE of the PIE1 register and PEIE of the INTCON register must set.

Upon entering Sleep mode, the device will be ready to accept clocks on the TX/CK pin and transmit data on the RX/DT pin. When the data word in the TSR has been completely clocked out by the external device, the pending byte in the TXREG will transfer to the TSR and the TXIF flag will be set, which wakes the processor from Sleep. At this point, the TXREG is available to accept another character for transmission, which will clear the TXIF flag.

Upon waking from Sleep, the instruction following the `SLEEP` instruction will be executed. If the Global Interrupt Enable (GIE) bit is also set, then the Interrupt Service Routine at address 0004h will be called.

23.6.3 ALTERNATE PIN LOCATIONS

This module incorporates I/O pins that can be moved to other locations with the use of the alternate pin function register, APFCON. To determine which pins can be moved and what their default locations are upon a Reset, see **Section 12.1 "Alternate Pin Function"** for more information.

NOTES:

 © 2012 Microchip Technology Inc.

24.0 PULSE WIDTH MODULATION (PWM) MODULE

The PWM module generates a Pulse-Width Modulated signal determined by the duty cycle, period, and resolution that are configured by the following registers:

- PR2
- T2CON
- PWMxDCH
- PWMxDCL
- PWMxCON

Figure 24-1 shows a typical waveform of the PWM signal. Figure 24-2 shows a simplified block diagram of PWM operation.

For a step-by-step procedure on how to set up this module for PWM operation, refer to **Section 24.1.9 "Setup for PWM Operation using PWMx Pins"**.

FIGURE 24-1: PWM OUTPUT

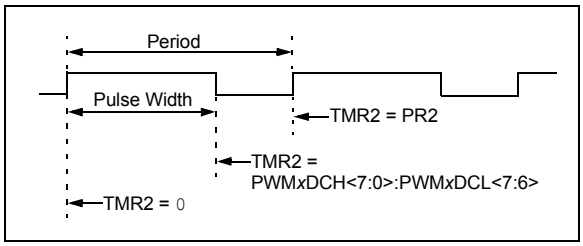

FIGURE 24-2: SIMPLIFIED PWM BLOCK DIAGRAM

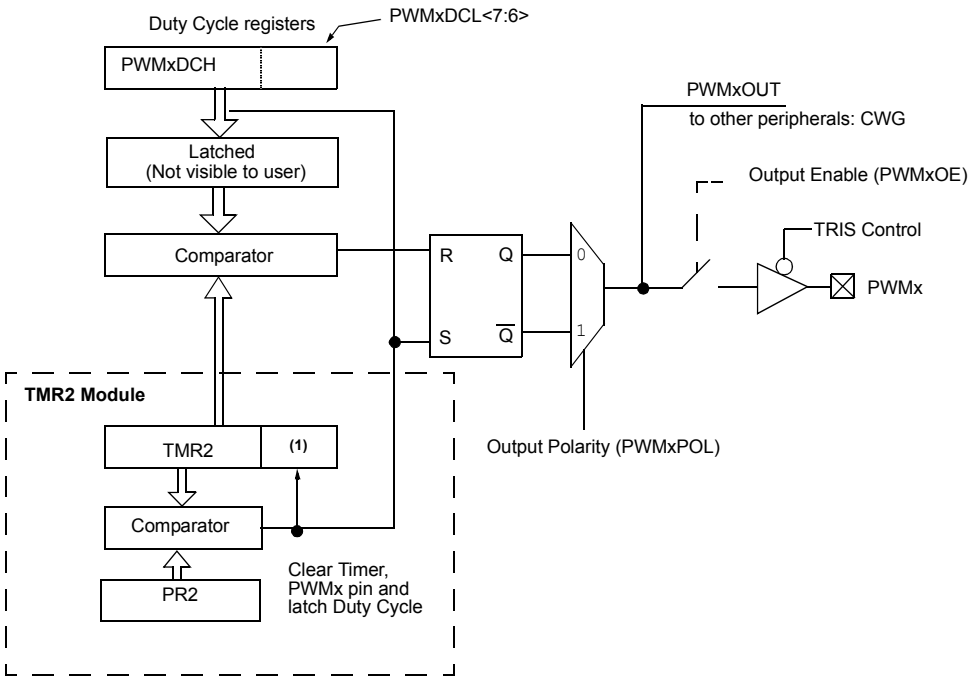

Note 1: 8-bit timer is concatenated with the two Least Significant bits of 1/FOSC adjusted by the Timer2 prescaler to create a 10-bit time base.

24.1 PWMx Pin Configuration

All PWM outputs are multiplexed with the PORT data latch. The user must configure the pins as outputs by clearing the associated TRIS bits.

Note:	Clearing the PWMxOE bit will relinquish control of the PWMx pin.

24.1.1 FUNDAMENTAL OPERATION

The PWM module produces a 10-bit resolution output. Timer2 and PR2 set the period of the PWM. The PWMxDCL and PWMxDCH registers configure the duty cycle. The period is common to all PWM modules, whereas the duty cycle is independently controlled.

Note:	The Timer2 postscaler is not used in the determination of the PWM frequency. The postscaler could be used to have a servo update rate at a different frequency than the PWM output.

All PWM outputs associated with Timer2 are set when TMR2 is cleared. Each PWMx is cleared when TMR2 is equal to the value specified in the corresponding PWMxDCH (8 MSb) and PWMxDCL<7:6> (2 LSb) registers. When the value is greater than or equal to PR2, the PWM output is never cleared (100% duty cycle).

Note:	The PWMxDCH and PWMxDCL registers are double buffered. The buffers are updated when Timer2 matches PR2. Care should be taken to update both registers before the timer match occurs.

24.1.2 PWM OUTPUT POLARITY

The output polarity is inverted by setting the PWMxPOL bit of the PWMxCON register.

24.1.3 PWM PERIOD

The PWM period is specified by the PR2 register of Timer2. The PWM period can be calculated using the formula of Equation 24-1.

EQUATION 24-1: PWM PERIOD

$$PWM\ Period = [(PR2) + 1] \bullet 4 \bullet TOSC \bullet (TMR2\ Prescale\ Value)$$

Note: TOSC = 1/FOSC

When TMR2 is equal to PR2, the following three events occur on the next increment cycle:

- TMR2 is cleared
- The PWM output is active. (Exception: When the PWM duty cycle = 0%, the PWM output will remain inactive.)
- The PWMxDCH and PWMxDCL register values are latched into the buffers.

Note:	The Timer2 postscaler has no effect on the PWM operation.

24.1.4 PWM DUTY CYCLE

The PWM duty cycle is specified by writing a 10-bit value to the PWMxDCH and PWMxDCL register pair. The PWMxDCH register contains the eight MSbs and the PWMxDCL<7:6>, the two LSbs. The PWMxDCH and PWMxDCL registers can be written to at any time.

Equation 24-2 is used to calculate the PWM pulse width. Equation 24-3 is used to calculate the PWM duty cycle ratio.

EQUATION 24-2: PULSE WIDTH

$$Pulse\ Width = (PWMxDCH{:}PWMxDCL<7{:}6>) \bullet TOSC \bullet (TMR2\ Prescale\ Value)$$

Note: TOSC = 1/FOSC

EQUATION 24-3: DUTY CYCLE RATIO

$$Duty\ Cycle\ Ratio = \frac{(PWMxDCH{:}PWMxDCL<7{:}6>)}{4(PR2 + 1)}$$

The 8-bit timer TMR2 register is concatenated with the two Least Significant bits of 1/FOSC, adjusted by the Timer2 prescaler to create the 10-bit time base. The system clock is used if the Timer2 prescaler is set to 1:1.

 © 2012 Microchip Technology Inc.

24.1.5 PWM RESOLUTION

The resolution determines the number of available duty cycles for a given period. For example, a 10-bit resolution will result in 1024 discrete duty cycles, whereas an 8-bit resolution will result in 256 discrete duty cycles.

The maximum PWM resolution is 10 bits when PR2 is 255. The resolution is a function of the PR2 register value as shown by Equation 24-4.

EQUATION 24-4: PWM RESOLUTION

$$Resolution = \frac{log[4(PR2 + 1)]}{log(2)} \ bits$$

Note: If the pulse width value is greater than the period, the assigned PWM pin(s) will remain unchanged.

TABLE 24-1: EXAMPLE PWM FREQUENCIES AND RESOLUTIONS (FOSC = 20 MHz)

PWM Frequency	0.31 kHz	4.88 kHz	19.53 kHz	78.12 kHz	156.3 kHz	208.3 kHz
Timer Prescale (1, 4, 64)	64	4	1	1	1	1
PR2 Value	0xFF	0xFF	0xFF	0x3F	0x1F	0x17
Maximum Resolution (bits)	10	10	10	8	7	6.6

TABLE 24-2: EXAMPLE PWM FREQUENCIES AND RESOLUTIONS (FOSC = 8 MHz)

PWM Frequency	0.31 kHz	4.90 kHz	19.61 kHz	76.92 kHz	153.85 kHz	200.0 kHz
Timer Prescale (1, 4, 64)	64	4	1	1	1	1
PR2 Value	0x65	0x65	0x65	0x19	0x0C	0x09
Maximum Resolution (bits)	8	8	8	6	5	5

24.1.6 OPERATION IN SLEEP MODE

In Sleep mode, the TMR2 register will not increment and the state of the module will not change. If the PWMx pin is driving a value, it will continue to drive that value. When the device wakes up, TMR2 will continue from its previous state.

24.1.7 CHANGES IN SYSTEM CLOCK FREQUENCY

The PWM frequency is derived from the system clock frequency (FOSC). Any changes in the system clock frequency will result in changes to the PWM frequency. Refer to **Section 6.0 “Active Clock Tuning (ACT) Module”** for additional details.

24.1.8 EFFECTS OF RESET

Any Reset will force all ports to Input mode and the PWM registers to their Reset states.

24.1.9 SETUP FOR PWM OPERATION USING PWMx PINS

The following steps should be taken when configuring the module for PWM operation using the PWMx pins:

1. Disable the PWMx pin output driver(s) by setting the associated TRIS bit(s).
2. Clear the PWMxCON register.
3. Load the PR2 register with the PWM period value.
4. Clear the PWMxDCH register and bits <7:6> of the PWMxDCL register.
5. Configure and start Timer2:
   - Clear the TMR2IF interrupt flag bit of the PIR1 register. See note below.
   - Configure the T2CKPS bits of the T2CON register with the Timer2 prescale value.
   - Enable Timer2 by setting the TMR2ON bit of the T2CON register.
6. Enable PWM output pin and wait until Timer2 overflows; TMR2IF bit of the PIR1 register is set. See note below.
7. Enable the PWMx pin output driver(s) by clearing the associated TRIS bit(s) and setting the PWMxOE bit of the PWMxCON register.
8. Configure the PWM module by loading the PWMxCON register with the appropriate values.

Note 1: In order to send a complete duty cycle and period on the first PWM output, the above steps must be followed in the order given. If it is not critical to start with a complete PWM signal, then replace Step 4 with Step 8.

2: For operation with other peripherals only, disable PWMx pin outputs.

 © 2012 Microchip Technology Inc.

24.2 Register Definitions: PWM Control

REGISTER 24-1: PWMxCON: PWM CONTROL REGISTER

R/W-0/0	R/W-0/0	R-0/0	R/W-0/0	U-0	U-0	U-0	U-0
PWMxEN	PWMxOE	PWMxOUT	PWMxPOL	—	—	—	—
bit 7							bit 0

Legend:		
R = Readable bit	W = Writable bit	U = Unimplemented bit, read as ‘0’
u = Bit is unchanged	x = Bit is unknown	-n/n = Value at POR and BOR/Value at all other Resets
‘1’ = Bit is set	‘0’ = Bit is cleared	

bit 7 **PWMxEN:** PWM Module Enable bit
1 = PWM module is enabled
0 = PWM module is disabled

bit 6 **PWMxOE:** PWM Module Output Enable bit
1 = Output to PWMx pin is enabled
0 = Output to PWMx pin is disabled

bit 5 **PWMxOUT:** PWM Module Output Value bit

bit 4 **PWMxPOL:** PWMx Output Polarity Select bit
1 = PWM output is active low
0 = PWM output is active high

bit 3-0 **Unimplemented:** Read as ‘0’

REGISTER 24-2: PWMxDCH: PWM DUTY CYCLE HIGH BITS

R/W-x/u	R/W-x/u	R/W-x/u	R/W-x/u	R/W-x/u	R/W-x/u	R/W-x/u	R/W-x/u
PWMxDCH<7:0>							
bit 7							bit 0

Legend:		
R = Readable bit	W = Writable bit	U = Unimplemented bit, read as ‘0’
u = Bit is unchanged	x = Bit is unknown	-n/n = Value at POR and BOR/Value at all other Resets
‘1’ = Bit is set	‘0’ = Bit is cleared	

bit 7-0 **PWMxDCH<7:0>:** PWM Duty Cycle Most Significant bits
These bits are the MSbs of the PWM duty cycle. The two LSbs are found in the PWMxDCL register.

REGISTER 24-3: PWMxDCL: PWM DUTY CYCLE LOW BITS

R/W-x/u	R/W-x/u	U-0	U-0	U-0	U-0	U-0	U-0
PWMxDCL<7:6>		—	—	—	—	—	—
bit 7							bit 0

Legend:		
R = Readable bit	W = Writable bit	U = Unimplemented bit, read as ‘0’
u = Bit is unchanged	x = Bit is unknown	-n/n = Value at POR and BOR/Value at all other Resets
‘1’ = Bit is set	‘0’ = Bit is cleared	

bit 7-6 **PWMxDCL<7:6>:** PWM Duty Cycle Least Significant bits
These bits are the LSbs of the PWM duty cycle. The MSbs are found in the PWMxDCH register.

bit 5-0 **Unimplemented:** Read as ‘0’

TABLE 24-3: SUMMARY OF REGISTERS ASSOCIATED WITH PWM

Name	Bit 7	Bit 6	Bit 5	Bit 4	Bit 3	Bit 2	Bit 1	Bit 0	Register on Page
PR2	Timer2 module Period Register								199*
PWM1CON	PWM1EN	PWM1OE	PWM1OUT	PWM1POL	—	—	—	—	291
PWM1DCH	PWM1DCH<7:0>								292
PWM1DCL	PWM1DCL<7:6>		—	—	—	—	—	—	292
PWM2CON	PWM2EN	PWM2OE	PWM2OUT	PWM2POL	—	—	—	—	292
PWM2DCH	PWM2DCH<7:0>								292
PWM2DCL	PWM2DCL<7:6>		—	—	—	—	—	—	292
T2CON	—	T2OUTPS<3:0>				TMR2ON	T2CKPS<1:0>		201
TMR2	Timer2 module Register								199*
TRISA	—	—	TRISA5	TRISA4	—(1)	—	—(1)	—(1)	132
TRISC	TRISC7(2)	TRISC6(2)	TRISC5	TRISC4	TRISC3	TRISC2	TRISC1	TRISC0	140

Legend: – = Unimplemented locations, read as ‘0’, u = unchanged, x = unknown. Shaded cells are not used by the PWM.
* Page provides register information.
Note 1: Unimplemented, read as ‘1’.
2: PIC16(L)F1459 only.

 © 2012 Microchip Technology Inc.

25.0 COMPLEMENTARY WAVEFORM GENERATOR (CWG) MODULE (PIC16(L)F1455/9 ONLY)

The Complementary Waveform Generator (CWG) produces a complementary waveform with dead-band delay from a selection of input sources.

The CWG module has the following features:

- Selectable dead-band clock source control
- Selectable input sources
- Output enable control
- Output polarity control
- Dead-band control with independent 6-bit rising and falling edge dead-band counters
- Auto-shutdown control with:
  - Selectable shutdown sources
  - Auto-restart enable
  - Auto-shutdown pin override control

FIGURE 25-1: SIMPLIFIED CWG BLOCK DIAGRAM

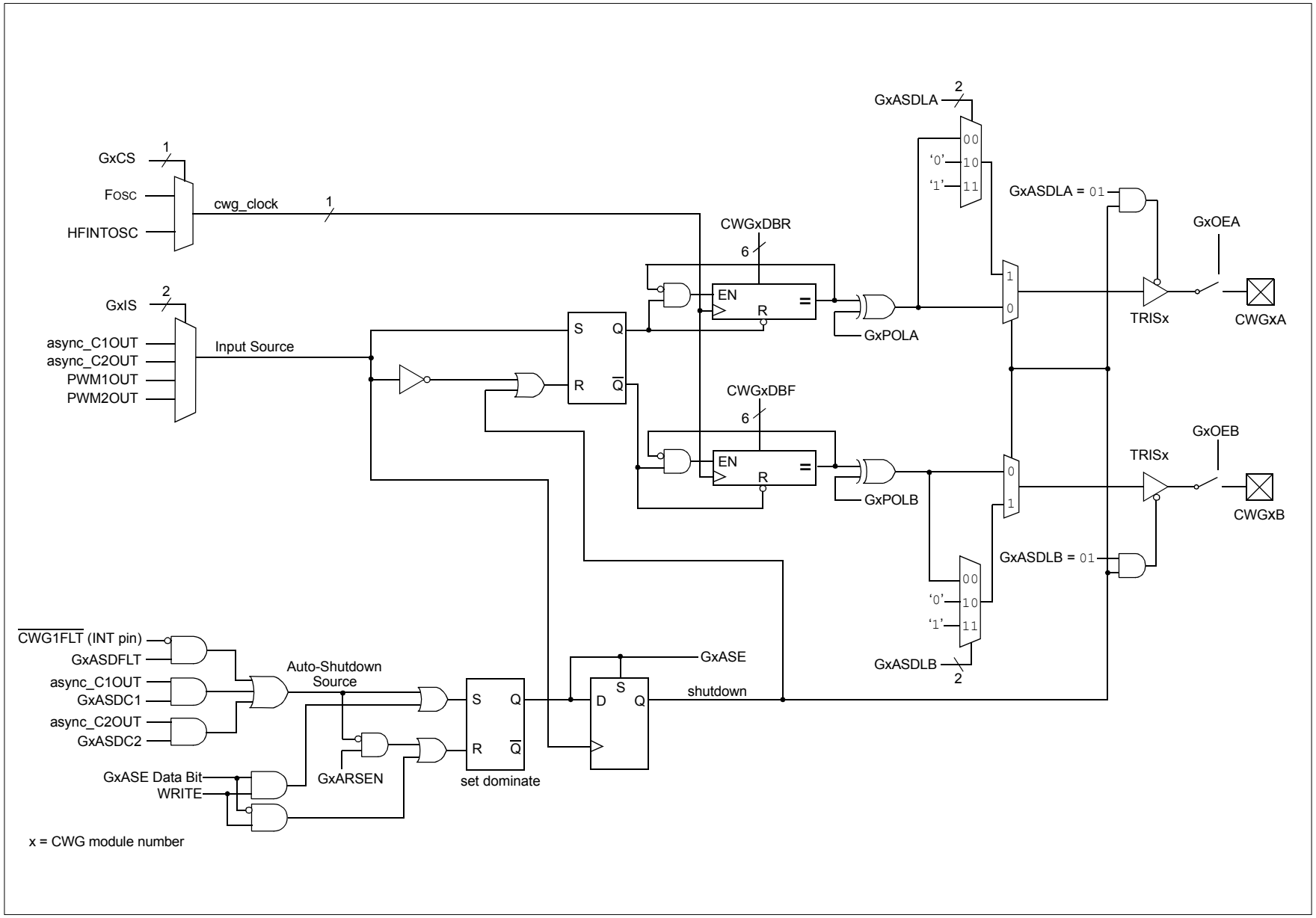

FIGURE 25-2: TYPICAL CWG OPERATION WITH PWM1 (NO AUTO-SHUTDOWN)

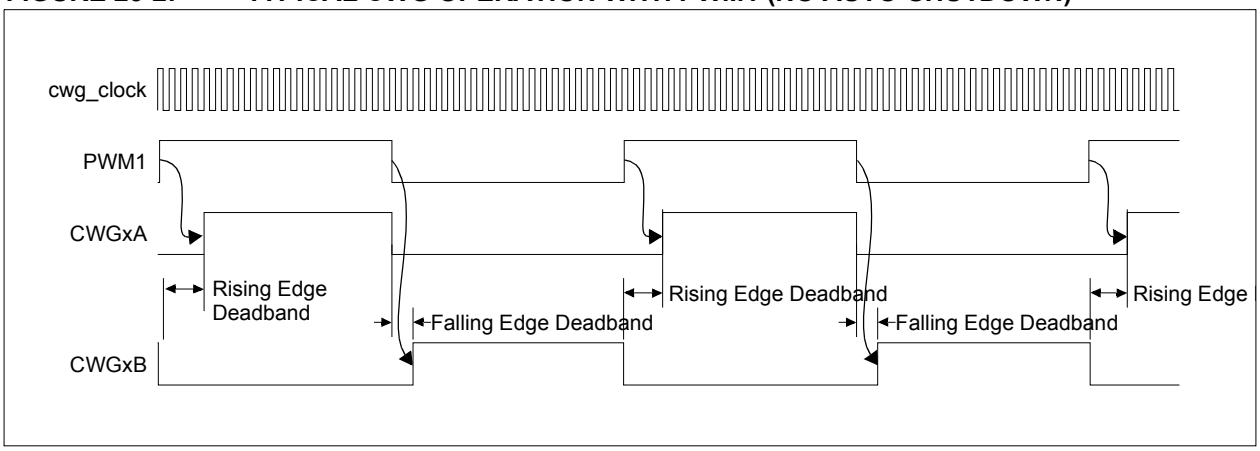

25.1 Fundamental Operation

The CWG generates a two output complementary waveform from one of four selectable input sources.

The off-to-on transition of each output can be delayed from the on-to-off transition of the other output thereby creating an immediate time delay where neither output is driven. This is referred to as dead time and is covered in **Section 25.5 "Dead-Band Control"**. A typical operating waveform, with dead band, generated from a single input signal is shown in Figure 25-2.

It may be necessary to guard against the possibility of circuit faults or a feedback event arriving too late or not at all. In this case, the active drive must be terminated before the Fault condition causes damage. This is referred to as auto-shutdown and is covered in **Section 25.9 "Auto-Shutdown Control"**.

25.2 Clock Source

The CWG module allows the following clock sources to be selected:

- Fosc (system clock)
- HFINTOSC (16 MHz only)

The clock sources are selected using the G1CS0 bit of the CWGxCON0 register (Register 25-1).

25.3 Selectable Input Sources

The CWG can generate the complementary waveform for the following input sources:

- async_C1OUT
- async_C2OUT
- PWM1OUT
- PWM2OUT

The input sources are selected using the GxIS<1:0> bits in the CWGxCON1 register (Register 25-2).

25.4 Output Control

Immediately after the CWG module is enabled, the complementary drive is configured with both CWGxA and CWGxB drives cleared.

25.4.1 OUTPUT ENABLES

Each CWG output pin has individual output enable control. Output enables are selected with the GxOEA and GxOEB bits of the CWGxCON0 register. When an output enable control is cleared, the module asserts no control over the pin. When an output enable is set, the override value or active PWM waveform is applied to the pin per the port priority selection. The output pin enables are dependent on the module enable bit, GxEN. When GxEN is cleared, CWG output enables and CWG drive levels have no effect.

25.4.2 POLARITY CONTROL

The polarity of each CWG output can be selected independently. When the output polarity bit is set, the corresponding output is active high. Clearing the output polarity bit configures the corresponding output as active low. However, polarity does not affect the override levels. Output polarity is selected with the GxPOLA and GxPOLB bits of the CWGxCON0 register.

25.5 Dead-Band Control

Dead-band control provides for non-overlapping output signals to prevent shoot-through current in power switches. The CWG contains two 6-bit dead-band counters. One dead-band counter is used for the rising edge of the input source control. The other is used for the falling edge of the input source control.

Dead band is timed by counting CWG clock periods from zero up to the value in the rising or falling dead-band counter registers. See CWGxDBR and CWGxDBF registers (Register 25-4 and Register 25-5, respectively).

25.6 Rising Edge Dead Band

The rising edge dead-band delays the turn-on of the CWGxA output from when the CWGxB output is turned off. The rising edge dead-band time starts when the rising edge of the input source signal goes true. When this happens, the CWGxB output is immediately turned off and the rising edge dead-band delay time starts. When the rising edge dead-band delay time is reached, the CWGxA output is turned on.

The CWGxDBR register sets the duration of the dead-band interval on the rising edge of the input source signal. This duration is from 0 to 64 counts of dead band.

Dead band is always counted off the edge on the input source signal. A count of 0 (zero), indicates that no dead band is present.

If the input source signal is not present long enough for the count to complete, no output will be seen on the respective output.

 © 2012 Microchip Technology Inc.

25.7 Falling Edge Dead Band

The falling edge dead band delays the turn-on of the CWGxB output from when the CWGxA output is turned off. The falling edge dead-band time starts when the falling edge of the input source goes true. When this happens, the CWGxA output is immediately turned off and the falling edge dead-band delay time starts. When the falling edge dead-band delay time is reached, the CWGxB output is turned on.

The CWGxDBF register sets the duration of the dead-band interval on the falling edge of the input source signal. This duration is from 0 to 64 counts of dead band.

Dead band is always counted off the edge on the input source signal. A count of 0 (zero), indicates that no dead band is present.

If the input source signal is not present long enough for the count to complete, no output will be seen on the respective output.

Refer to Figure 25-5 and Figure 25-6 for examples.

25.8 Dead-Band Uncertainty

When the rising and falling edges of the input source trigger the dead-band counters, the input may be asynchronous. This will create some uncertainty in the dead-band time delay. The maximum uncertainty is equal to one CWG clock period. Refer to Equation 25-1 for more detail.

FIGURE 25-3: DEAD-BAND OPERATION, CWGxDBR = 01H, CWGxDBF = 02H

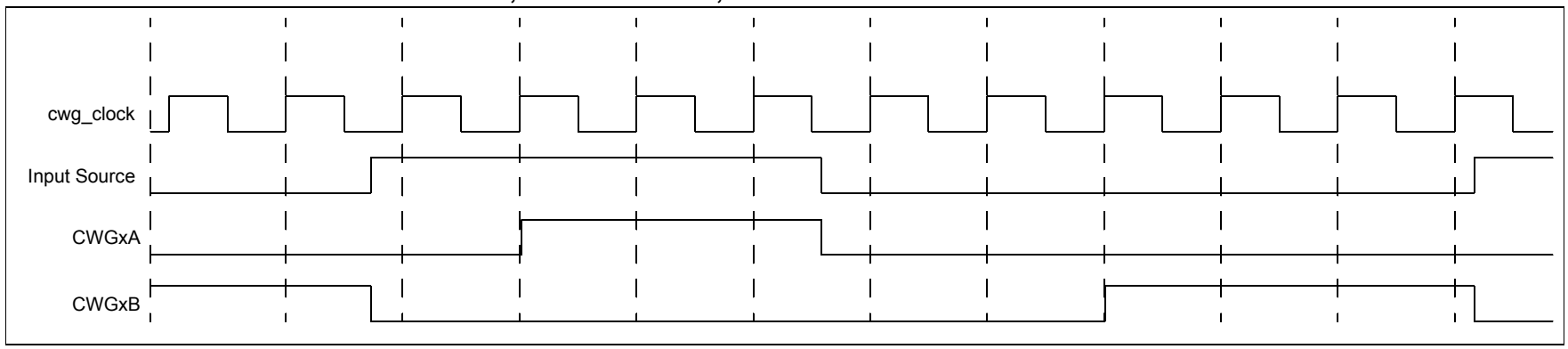

FIGURE 25-4: DEAD-BAND OPERATION, CWGxDBR = 03H, CWGxDBF = 04H, SOURCE SHORTER THAN DEAD BAND

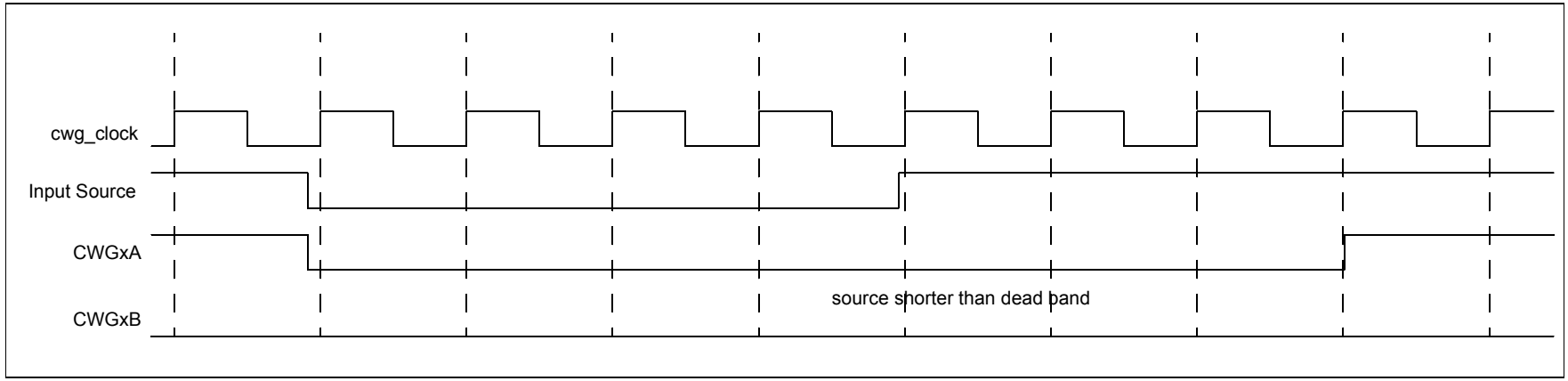

© 2012 Microchip Technology Inc.

EQUATION 25-1: DEAD-BAND UNCERTAINTY

$$T_{DEADBAND_UNCERTAINTY} = \frac{1}{Fcwg_clock}$$

Example:

$$Fcwg_clock = 16\ MHz$$

Therefore:

$$T_{DEADBAND_UNCERTAINTY} = \frac{1}{Fcwg_clock}$$

$$= \frac{1}{16\ MHz}$$

$$= 625ns$$

25.9 Auto-Shutdown Control

Auto-shutdown is a method to immediately override the CWG output levels with specific overrides that allow for the safe shutdown of the circuit. The shutdown state can be either cleared automatically or held until cleared by software.

25.9.1 SHUTDOWN

The shutdown state can be entered by either of the following two methods:

- Software generated
- External Input

25.9.1.1 Software Generated Shutdown

Setting the GxASE bit of the CWGxCON2 register will force the CWG into the shutdown state.

When auto-restart is disabled, the shutdown state will persist as long as the GxASE bit is set.

When auto-restart is enabled, the GxASE bit will clear automatically and resume operation on the next rising edge event. See Figure 25-6.

25.9.1.2 External Input Source

External shutdown inputs provide the fastest way to safely suspend CWG operation in the event of a Fault condition. When any of the selected shutdown inputs go active, the CWG outputs will immediately go to the selected override levels without a software delay. Any combination of two input sources can be selected to cause a shutdown condition. The sources are:

- async_C1OUT
- async_C2OUT
- $\overline{\text{CWG1FLT}}$

Shutdown inputs are selected using the GxASDS0 and GxASDS1 bits of the CWGxCON2 register (Register 25-3).

Note:	Shutdown inputs are level sensitive, not edge sensitive. The shutdown state cannot be cleared, except by disabling auto-shutdown, as long as the shutdown input level persists.

25.10 Operation During Sleep

The CWG module operates independently from the system clock and will continue to run during Sleep, provided that the clock and input sources selected remain active.

The HFINTOSC remains active during Sleep, provided that the CWG module is enabled, the input source is active, and the HFINTOSC is selected as the clock source, regardless of the system clock source selected. In other words, if the HFINTOSC is simultaneously selected as the system clock and the CWG clock source, when the CWG is enabled and the input source is active, the CPU will go idle during Sleep, but the CWG will continue to operate and the HFINTOSC will remain active. This will have a direct effect on the Sleep mode current.

 © 2012 Microchip Technology Inc.

25.11 Configuring the CWG

The following steps illustrate how to properly configure the CWG to ensure a synchronous start:

1. Ensure that the TRIS control bits corresponding to CWGxA and CWGxB are set so that both are configured as inputs.
2. Clear the GxEN bit, if not already cleared.
3. Set desired dead-band times with the CWGxDBR and CWGxDBF registers.
4. Setup the following controls in the CWGxCON2 auto-shutdown register:
   - Select desired shutdown source.
   - Select both output overrides to the desired levels (this is necessary even if not using auto-shutdown because start-up will be from a shutdown state).
   - Set the GxASE bit and clear the GxARSEN bit.
5. Select the desired input source using the CWGxCON1 register.
6. Configure the following controls in the CWGxCON0 register:
   - Select desired clock source.
   - Select the desired output polarities.
   - Set the output enables for the outputs to be used.
7. Set the GxEN bit.
8. Clear TRIS control bits corresponding to CWGxA and CWGxB to be used to configure those pins as outputs.
9. If auto-restart is to be used, set the GxARSEN bit and the GxASE bit will be cleared automatically. Otherwise, clear the GxASE bit to start the CWG.

25.11.1 PIN OVERRIDE LEVELS

The levels driven to the output pins, while the shutdown input is true, are controlled by the GxASDLA and GxASDLB bits of the CWGxCON1 register (Register 25-2). GxASDLA controls the CWG1A override level and GxASDLB controls the CWG1B override level. The control bit logic level corresponds to the output logic drive level while in the shutdown state. The polarity control does not apply to the override level.

25.11.2 AUTO-SHUTDOWN RESTART

After an auto-shutdown event has occurred, there are two ways to have resume operation:

- Software controlled
- Auto-restart

The restart method is selected with the GxARSEN bit of the CWGxCON2 register. Waveforms of software controlled and automatic restarts are shown in Figure 25-5 and Figure 25-6.

25.11.2.1 Software Controlled Restart

When the GxARSEN bit of the CWGxCON2 register is cleared, the CWG must be restarted after an auto-shutdown event by software.

Clearing the shutdown state requires all selected shutdown inputs to be low; otherwise, the GxASE bit will remain set. The overrides will remain in effect until the first rising edge event after the GxASE bit is cleared. The CWG will then resume operation.

25.11.2.2 Auto-Restart

When the GxARSEN bit of the CWGxCON2 register is set, the CWG will restart from the auto-shutdown state automatically.

The GxASE bit will clear automatically when all shutdown sources go low. The overrides will remain in effect until the first rising edge event after the GxASE bit is cleared. The CWG will then resume operation.

FIGURE 25-5: SHUTDOWN FUNCTIONALITY, AUTO-RESTART DISABLED (GxARSEN = 0, GxASDLA = 01, GxASDLB = 01)

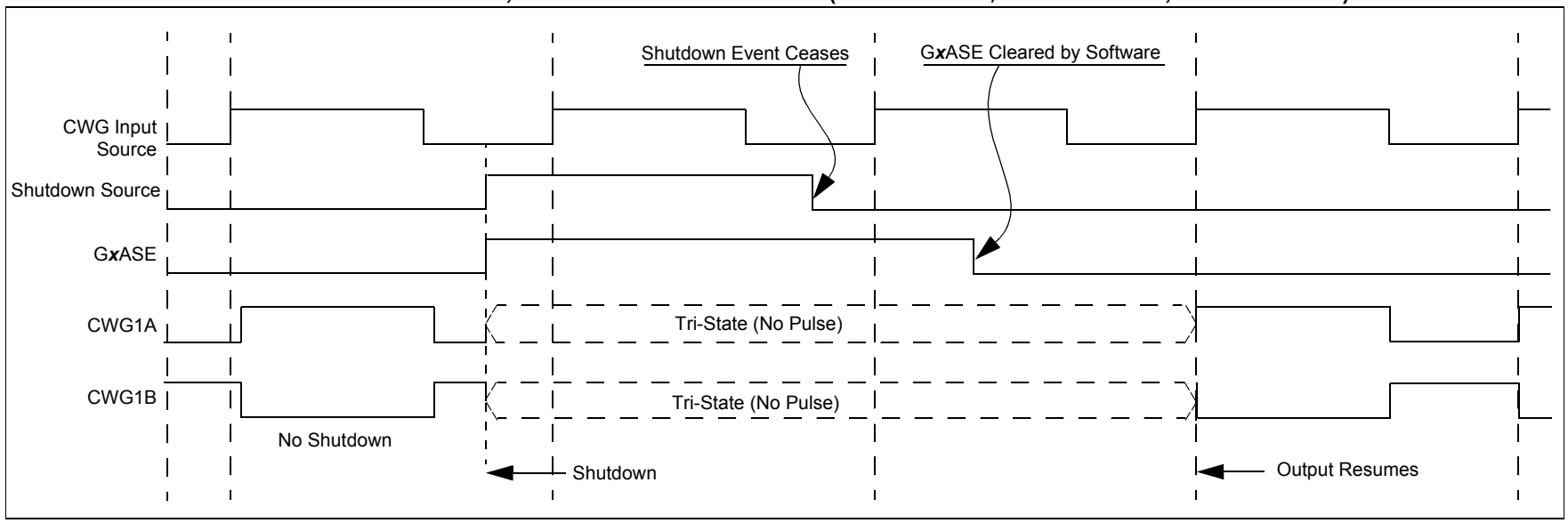

FIGURE 25-6: SHUTDOWN FUNCTIONALITY, AUTO-RESTART ENABLED (GxARSEN = 1, GxASDLA = 01, GxASDLB = 01)

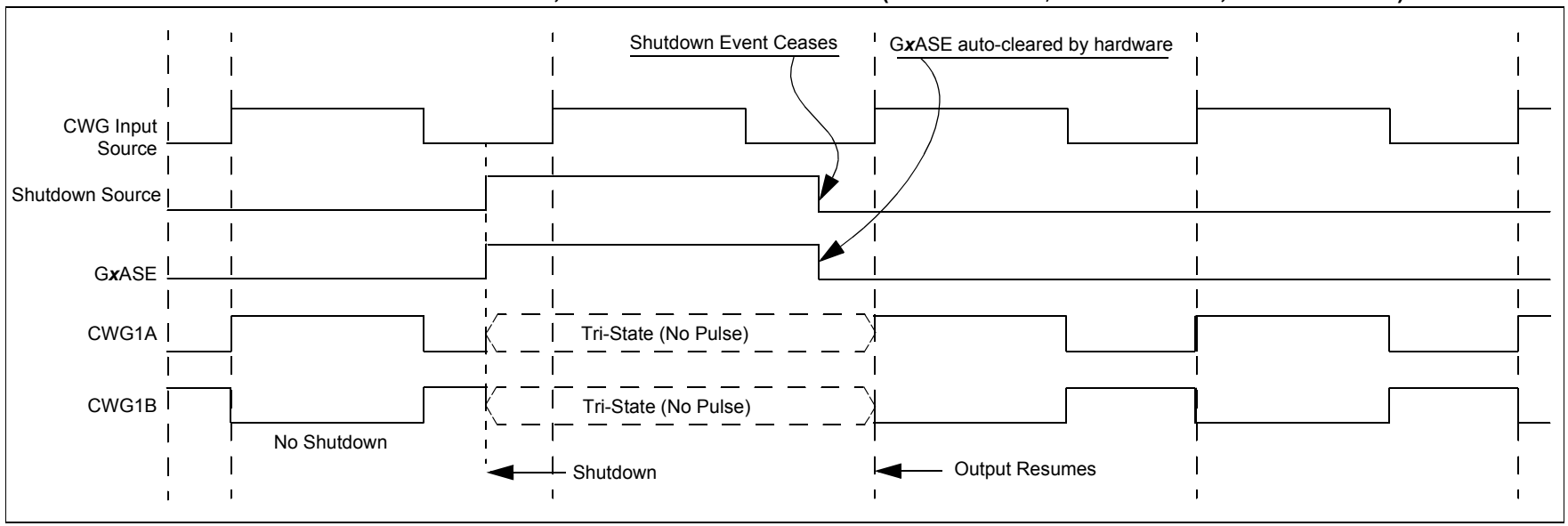

© 2012 Microchip Technology Inc.

25.12 Register Definitions: CWG Control

REGISTER 25-1: CWGxCON0: CWG CONTROL REGISTER 0

R/W-0/0	R/W-0/0	R/W-0/0	R/W-0/0	R/W-0/0	U-0	U-0	R/W-0/0
GxEN	GxOEB	GxOEA	GxPOLB	GxPOLA	—	—	GxCS0
bit 7							bit 0

Legend:		
R = Readable bit	W = Writable bit	U = Unimplemented bit, read as ‘0’
u = Bit is unchanged	x = Bit is unknown	-n/n = Value at POR and BOR/Value at all other Resets
‘1’ = Bit is set	‘0’ = Bit is cleared	q = Value depends on condition

bit 7 **GxEN:** CWGx Enable bit
1 = Module is enabled
0 = Module is disabled

bit 6 **GxOEB:** CWGxB Output Enable bit
1 = CWGxB is available on appropriate I/O pin
0 = CWGxB is not available on appropriate I/O pin

bit 5 **GxOEA:** CWGxA Output Enable bit
1 = CWGxA is available on appropriate I/O pin
0 = CWGxA is not available on appropriate I/O pin

bit 4 **GxPOLB:** CWGxB Output Polarity bit
1 = Output is inverted polarity
0 = Output is normal polarity

bit 3 **GxPOLA:** CWGxA Output Polarity bit
1 = Output is inverted polarity
0 = Output is normal polarity

bit 2-1 **Unimplemented:** Read as ‘0’

bit 0 **GxCS0:** CWGx Clock Source Select bit
1 = HFINTOSC
0 = FOSC

REGISTER 25-2: CWGxCON1: CWG CONTROL REGISTER 1

R/W-x/u	R/W-x/u	R/W-x/u	R/W-x/u	U-0	U-0	R/W-0/0	R/W-0/0
GxASDLB<1:0>		GxASDLA<1:0>		—	—	GxIS<1:0>	
bit 7							bit 0

Legend:		
R = Readable bit	W = Writable bit	U = Unimplemented bit, read as ‘0’
u = Bit is unchanged	x = Bit is unknown	-n/n = Value at POR and BOR/Value at all other Resets
‘1’ = Bit is set	‘0’ = Bit is cleared	q = Value depends on condition

bit 7-6 **GxASDLB<1:0>:** CWGx Shutdown State for CWGxB
When an auto-shutdown event is present (GxASE = 1):
11 = CWGxB pin is driven to ‘1’, regardless of the setting of the GxPOLB bit
10 = CWGxB pin is driven to ‘0’, regardless of the setting of the GxPOLB bit
01 = CWGxB pin is tri-stated
00 = CWGxB pin is driven to its inactive state after the selected dead-band interval. GxPOLB still will control the polarity of the output

bit 5-4 **GxASDLA<1:0>:** CWGx Shutdown State for CWGxA
When an auto shutdown event is present (GxASE = 1):
11 = CWGxA pin is driven to ‘1’, regardless of the setting of the GxPOLA bit
10 = CWGxA pin is driven to ‘0’, regardless of the setting of the GxPOLA bit
01 = CWGxA pin is tri-stated
00 = CWGxA pin is driven to its inactive state after the selected dead-band interval. GxPOLA still will control the polarity of the output

bit 3-2 **Unimplemented:** Read as ‘0’

bit 1-0 **GxIS<2:0>:** CWGx Input Source Select bits
11 = PWM2OUT
10 = PWM1OUT
01 = async_C1OUT
00 = async_C2OUT

 © 2012 Microchip Technology Inc.

REGISTER 25-3: CWGxCON2: CWG CONTROL REGISTER 2

R/W-0/0	R/W-0/0	U-0	U-0	R/W-0/0	R/W-0/0	R/W-0/0	R/W-0/0
GxASE	GxARSEN	—	—	GxASDC2	GxASDC1	GxASDFLT	—
bit 7							bit 0

Legend:		
R = Readable bit	W = Writable bit	U = Unimplemented bit, read as ‘0’
u = Bit is unchanged	x = Bit is unknown	-n/n = Value at POR and BOR/Value at all other Resets
‘1’ = Bit is set	‘0’ = Bit is cleared	q = Value depends on condition

bit 7 **GxASE:** Auto-Shutdown Event Status bit
1 = An auto-shutdown event has occurred
0 = No auto-shutdown event has occurred

bit 6 **GxARSEN:** Auto-Restart Enable bit
1 = Auto-restart is enabled
0 = Auto-restart is disabled

bit 5-4 **Unimplemented:** Read as ‘0’

bit 3 **GxASDC2:** CWG Auto-Shutdown on Comparator 2 Enable
1 = Shutdown when Comparator 2 output is high
0 = Comparator 2 output has no effect on shutdown

bit 2 **GxASDC1:** CWG Auto-Shutdown on Comparator 1 Enable
1 = Shutdown when Comparator 1 output is high
0 = Comparator 1 output has no effect on shutdown

bit 1 **GxASDFLT:** CWG Auto-Shutdown on FLT Enable bit
1 = Shutdown when $\overline{\text{CWG1FLT}}$ input is low
0 = $\overline{\text{CWG1FLT}}$ input has no effect on shutdown

bit 0 **Unimplemented:** Read as ‘0’

REGISTER 25-4: CWGxDBR: COMPLEMENTARY WAVEFORM GENERATOR (CWGx) RISING DEAD-BAND COUNT REGISTER

U-0	U-0	R/W-x/u	R/W-x/u	R/W-x/u	R/W-x/u	R/W-x/u	R/W-x/u
—	—	CWG**x**DBR<5:0>					
bit 7							bit 0

Legend:		
R = Readable bit	W = Writable bit	U = Unimplemented bit, read as ‘0’
u = Bit is unchanged	x = Bit is unknown	-n/n = Value at POR and BOR/Value at all other Resets
‘1’ = Bit is set	‘0’ = Bit is cleared	q = Value depends on condition

bit 7-6 **Unimplemented:** Read as ‘0’

bit 5-0 **CWGxDBR<5:0>:** Complementary Waveform Generator (CWGx) Rising Counts bits

11 1111 = 63-64 counts of dead band
11 1110 = 62-63 counts of dead band

•
•
•

00 0010 = 2-3 counts of dead band
00 0001 = 1-2 counts of dead band
00 0000 = 0 counts of dead band

REGISTER 25-5: CWGxDBF: COMPLEMENTARY WAVEFORM GENERATOR (CWGx) FALLING DEAD-BAND COUNT REGISTER

U-0	U-0	R/W-x/u	R/W-x/u	R/W-x/u	R/W-x/u	R/W-x/u	R/W-x/u
—	—	CWGxDBF<5:0>					
bit 7							bit 0

Legend:		
R = Readable bit	W = Writable bit	U = Unimplemented bit, read as ‘0’
u = Bit is unchanged	x = Bit is unknown	-n/n = Value at POR and BOR/Value at all other Resets
‘1’ = Bit is set	‘0’ = Bit is cleared	q = Value depends on condition

bit 7-6 **Unimplemented:** Read as ‘0’

bit 5-0 **CWGxDBF<5:0>:** Complementary Waveform Generator (CWGx) Falling Counts bits

11 1111 = 63-64 counts of dead band
11 1110 = 62-63 counts of dead band

•
•
•

00 0010 = 2-3 counts of dead band
00 0001 = 1-2 counts of dead band
00 0000 = 0 counts of dead band. Dead-band generation is bypassed

 © 2012 Microchip Technology Inc.

TABLE 25-1: SUMMARY OF REGISTERS ASSOCIATED WITH CWG(2)

Name	Bit 7	Bit 6	Bit 5	Bit 4	Bit 3	Bit 2	Bit 1	Bit 0	Register on Page
ANSELA	—	—	—	ANSA4	—	—	—	—	133
CWGxCON0	GxEN	GxOEB	GxOEA	GxPOLB	GxPOLA	—	—	G1CS0	303
CWGxCON1	GxASDLB<1:0>		GxASDLA<1:0>		—	—	GxIS<1:0>		304
CWGxCON2	GxASE	GxARSEN	—	—	GxASDC2	GxASDC1	GxASDFLT	—	305
CWGxDBF	—	—	CWGxDBF<5:0>						306
CWGxDBR	—	—	CWGxDBR<5:0>						306
LATA	—	—	LATA5	LATA4	—	—	—	—	133
TRISA	—	—	TRISA5	TRISA4	—(1)	—	—(1)	—(1)	132
TRISC	TRISC7(1)	TRISC6(1)	TRISC5	TRISC4	TRISC3	TRISC2	TRISC1	TRISC0	140

Legend: x = unknown, u = unchanged, – = unimplemented locations read as '0'. Shaded cells are not used by CWG.

Note 1: Unimplemented, read as '1'.

2: PIC16(L)F1455/9 only.

NOTES:

 © 2012 Microchip Technology Inc.

26.0 UNIVERSAL SERIAL BUS (USB)

This section describes the details of the USB peripheral. Because of the very specific nature of the module, knowledge of USB is expected. Some high-level USB information is provided in **Section 26.1 "Overview"** only for application design reference. Designers are encouraged to refer to the official specification published by the USB Implementers Forum (USB-IF) for the latest information. USB Specification Revision 2.0 is the most current specification at the time of publication of this document.

26.1 Overview

This device contains a full-speed and low-speed compatible USB Serial Interface Engine (SIE) that allows fast communication between any USB host and the microcontroller. The SIE can be interfaced directly to the USB by utilizing the internal transceiver. Some special hardware features have been included to improve performance. Dual access port memory in the device's data memory space (USB RAM) has been supplied to share direct memory access between the microcontroller core and the SIE. Buffer descriptors are also provided, allowing users to freely program endpoint memory usage within the USB RAM space. Figure 26-1 presents a general overview of the USB peripheral and its features.

FIGURE 26-1: USB PERIPHERAL AND OPTIONS

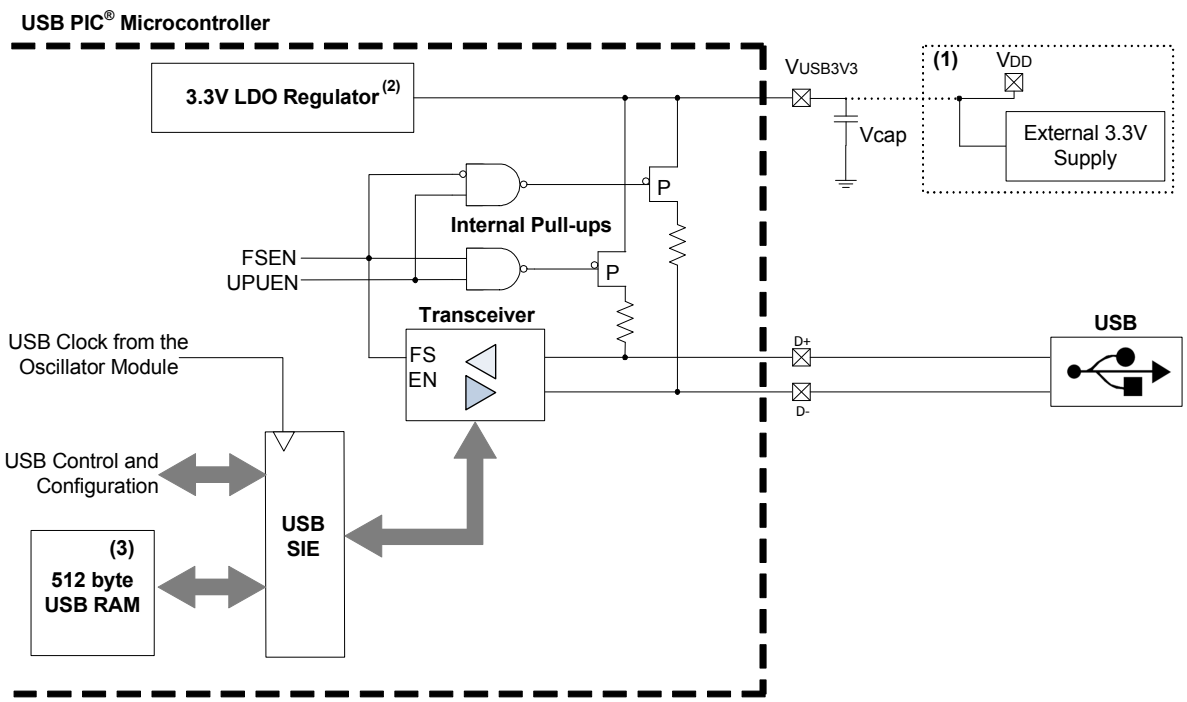

Note 1: Possible optional setup for LF parts only. F parts should use internal LDO to power V_{USB3V3}.

2: On F devices the regulator is powered by Vdd. On LF devices the regulator is internally bypassed to Vdd.

3: 496 bytes accessible in both linear and banked data space. 16 bytes accessible in access data space only.

26.2 USB Status and Control

The operation of the USB module is configured and managed through three control registers. In addition, a total of 14 registers are used to manage the actual USB transactions. The registers are:

- USB Control register (UCON)
- USB Configuration register (UCFG)
- USB Transfer Status register (USTAT)
- USB Device Address register (UADDR)
- Frame Number registers (UFRMH:UFRML)
- Endpoint Enable registers 0 through 7 (UEPn)

26.2.1 USB CONTROL (UCON) REGISTER

The USB Control register (Register 26-1) contains bits needed to control the module behavior during transfers. The register contains bits that control the following:

- Main USB Peripheral Enable
- Ping-Pong Buffer Pointer Reset
- Control of the Suspend mode
- Packet Transfer Disable

The SE0 bit of the UCON register is used to indicate the occurrence of a single-ended zero on the bus. When the USB module is enabled, this bit should be monitored to determine whether the differential data lines have come out of a single-ended zero condition. This helps to differentiate the initial power-up state from the USB Reset signal.

The USBEN bit of the UCON register is used to enable and disable the module. Setting this bit activates the module and resets all of the PPBI bits in the Buffer Descriptor Table to '0'. If enabled, this bit will also activate the USB internal pull-up resistors. Thus, this bit can be used as a soft attach/detach to the USB. The USB module needs to be supplied with an active clock source before the USBEN bit can be set. Also, the USB module needs to be fully preconfigured prior to enabling the USB module.

Note:	If the PLL is being used, wait until the PLLRDY bit is set in the OSCSTAT register before attempting to set the USBEN bit.

The PPBRST bit of the UCON register controls the Reset status when Double-Buffering mode (ping-pong buffering) is used. When the PPBRST bit is set, all Ping-Pong Buffer Pointers are set to the Even buffers. The PPBRST bit must be cleared by firmware. This bit is ignored in buffering modes not using ping-pong buffering.

The PKTDIS bit of the UCON register is a flag indicating that the SIE has disabled packet transmission and reception. This bit is set by the SIE when a SETUP token is received to allow setup processing. This bit cannot be set by the microcontroller, only cleared. Clearing the bit to '0' allows the SIE to continue transmission and/or reception. Any pending events within the Buffer Descriptor Table will still be available, indicated within the USTAT register's FIFO buffer ENDP bits.

The RESUME bit of the UCON register configures the peripheral to perform a remote wake-up by executing Resume signaling. To generate a valid remote wake-up, firmware must set the RESUME bit for 10 ms and then automatically clear the bit. For more information on "resume signaling", see the USB 2.0 specification.

The SUSPND bit of the UCON register places the module and supporting circuitry in a Low-Power mode. The input clock to the SIE is also disabled. This bit must be set by the firmware in response to an IDLEIF interrupt. It should be reset by the microcontroller firmware after an ACTVIF interrupt is observed. When this bit is active, the device remains attached to the bus but the transceiver outputs remain Idle. The voltage on the V_{USB3V3} pin may vary depending on the value of this bit. Setting this bit before a IDLEIF request will result in unpredictable bus behavior.

Note:	While in Suspend mode, a typical bus-powered USB device is limited to the suspend current discussed in the USB 2.0 specification Chapter 7.2.3. This is the complete current, which may be drawn by the microcontroller and its supporting circuitry. Care should be taken to assure minimum current draw when the device enters Suspend mode.

26.2.2 USB CONFIGURATION (UCFG) REGISTER

The UCFG register (Register 26-2) is used in configuring system level behavior of the USB module. All internal and external hardware should be configured prior to attempting communications. The UCFG register is used for the following USB functions:

- Bus Speed (Full/Low Speed)
- On-Chip Pull-up Resistor Enable
- Ping-Pong Buffer Usage

The UTEYE bit of the UCFG register enables the eye pattern generation. This bit aids in module testing, debugging and USB certification processes. Refer to **26.2.2.4 "Eye Pattern Test Enable"** for more detail.

Note:	The USB speed, transceiver and pull-up should only be configured during the module setup phase. It is not recommended to switch these settings while the module is enabled.

 © 2012 Microchip Technology Inc.

26.2.2.1 Internal Transceiver

The USB peripheral has a full-speed and low-speed USB 2.0 capable transceiver internally built-in and connected to the SIE. The internal transceiver is enabled when the USBEN bit of the USBCON register is set. Full-speed operation is selected by setting the FSEN bit of the UCFG register.

The on-chip USB pull-up resistors are controlled by the UPUEN bit of the USFG register. The pull-up resistors can only be active when the USBEN bit of the USBCON register is set and the module is configured for use.

The internal USB transceiver is powered from the VUSB3V3 pin. In order to meet USB signaling level specifications, VUSB3V3 must be supplied with a voltage source between 3.0V and 3.6V. The best electrical signal quality is obtained when a 3.3V supply is used and locally bypassed with a high quality ceramic capacitor. The capacitor should be placed as close as possible to the VUSB3V3 and VSS pins.

Note:	The VUSB3V3 voltage is supplied.

The D+ and D- signal lines can be routed directly to their respective pins on the USB connector or cable (for hard-wired applications). No additional resistors, capacitors, or magnetic components are required as the D+ and D- drivers have controlled slew rate and output impedance intended to match with the characteristic impedance of the USB cable. See the USB specifications for the impedance matching requirements.

26.2.2.2 Internal Pull-Up Resistors

The PIC® devices have built-in pull-up resistors designed to meet the requirements for low-speed and full-speed USB. The UPUEN bit of the UCFG register enables the internal pull-ups.

Note:	The official USB specifications require the that USB devices must never source any current onto the VBUS line of the USB cable. Additionally, USB devices must never source any current on the D+/D- data lines when the VBUS is below the required voltage. In order to meet this requirement, applications which are not purely bus powered should monitor the VBUS line and avoid turning on the USB module and D+/D- internal pull-up resistors until the VBUS meets requirements. VBUS can be connected to and monitored by any 5V tolerant I/O pin for this purpose. Refer to USB Specification 2.0, 7.2.1 for information.

26.2.2.3 Ping-Pong Buffer Configuration

The usage of ping-pong buffers is configured using the PPB bits of the UCFG register. Refer to **Section 26.4.4 "Ping-Pong Buffering"** for a complete explanation of the ping-pong buffers.

26.2.2.4 Eye Pattern Test Enable

An automatic eye pattern test can be generated by setting the UTEYE bit of the USFG register. The eye pattern output is dependent upon the USB modules settings, which must be configured prior to use. The module must be enabled for eye pattern output to function.

Once UTEYE is set, the module emulates a switch from a receive to transmit state and will start transmitting a J-K-J-K bit sequence (K-J-K-J for full speed). The sequence will be repeated indefinitely while the Eye Pattern Test mode is enabled.

Note:	The UTEYE bit should never be set while the module is connected to an actual USB system.

This test mode is intended for board verification to aid with USB certification tests. It is intended to show a system developer the noise integrity of the USB signals which can be affected by board traces, impedance mismatches and proximity to other system components. It does not properly test the transition from a receive to a transmit state. Although the eye pattern is not meant to replace the more complex USB certification test, it should aid during first order system debugging.

26.2.3 USB STATUS (USTAT) REGISTER

The USB Status register (Register 26-3) reports the transaction status within the SIE. When the SIE issues a USB transaction complete interrupt (TRNIF bit), USTAT should be read to determine the status of the transfer. USTAT contains the transfer endpoint number, direction and Ping-Pong Buffer Pointer value (if used).

> **Note:** The data in the USB Status register is valid two SIE clocks after the TRNIF bit is asserted.
>
> In low-speed operation with the system clock operating at 48 MHz, a delay may be required between receiving the transaction complete interrupt and processing the data in the USTAT register.

The USTAT register is actually a read window into a four-byte status FIFO, maintained by the SIE. It allows the microcontroller to process one transfer while the SIE processes additional endpoints (Figure 26-2). When the SIE completes using a buffer for reading or writing data, it updates the USTAT register. If another USB transfer is performed before the TRNIF bit is serviced, the SIE will store the status of the next transaction into the status FIFO.

Clearing the TRNIF bit advances the FIFO. If the next data in the FIFO holding register is valid, the SIE will reassert the interrupt within 6 TCY of clearing the TRNIF bit. If no additional data is present, the TRNIF bit will remain clear; USTAT data will no longer be reliable.

> **Note:** If an endpoint request is received while the USTAT FIFO is full, the SIE will automatically issue a NAK back to the host.

FIGURE 26-2: USTAT FIFO

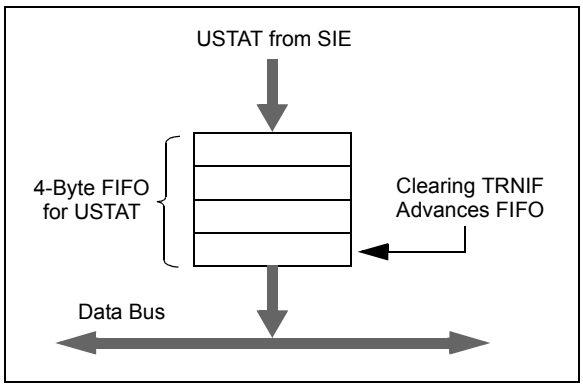

26.2.4 USB ENDPOINT CONTROL (UEPN) REGISTER

Each bidirectional endpoint pair has its own independent control register, UEPn (where 'n' represents the endpoint number). Each register has an identical complement of control bits (see Register 26-4).

The EPHSHK bit configures the USB handshaking for the endpoint. Typically, this bit is always set except when using isochronous endpoints.

The EPCONDIS bit configures the USB control operations through the endpoint. Clearing this bit enables SETUP transactions. The corresponding EPINEN and EPOUTEN bits must be set to enable IN and OUT transactions.

> **Note:** For Endpoint 0, the EPCONDIS bit should always be cleared since the USB specifications identify Endpoint 0 as the default control endpoint.

The EPOUTEN bit configures USB OUT transactions from the host. Setting this bit enables OUT transactions. Similarly, the EPINEN bit is used to configure the USB IN transactions from the host.

The EPSTALL bit indicates a STALL condition for the endpoint. If a STALL is issued on a particular endpoint, the EPSTALL bit for that endpoint pair will be set by the SIE. This bit remains set until it is cleared through firmware, or until the SIE is reset.

26.2.5 USB ADDRESS (UADDR) REGISTER

The USB Address register contains the unique USB address that the peripheral will decode when active. The UADDR register is reset to 00h when a USB Reset is received, indicated by the USB Reset Interrupt bit (URSTIF), or when a Reset is received from the microcontroller. The USB address must be written in response to the USB SET_ADDRESS request.

26.2.6 USB FRAME NUMBER REGISTERS (UFRMH:UFRML)

The Frame Number registers contain the 11-bit frame number. The low-order byte is contained in UFRML, while the three high-order bits are contained in UFRMH. The register pair is updated with the current frame number whenever a SOF token is received. For the microcontroller, these registers are read-only. The Frame Number registers are primarily used for isochronous transfers. The contents of the UFRMH and UFRML registers are only valid when the 48 MHz SIE clock is active (i.e., contents are inaccurate when SUSPND bit of the UCON register is set).

 © 2012 Microchip Technology Inc.

26.3 USB RAM

USB data moves between the microcontroller core and the SIE through the dual-port USB RAM. This is a special dual access memory that is mapped into a normal data memory space (Figure 26-3).

The dual-port general purpose memory space is used specifically for endpoint buffer control. Depending on the type of buffering being used, all but 8 bytes of Bank 0 may also be available for use as USB buffer space.

Although USB RAM is available to the microcontroller as data memory, the sections that are being accessed by the SIE should not be accessed by the microcontroller. A semaphore mechanism is used to determine the access to a particular buffer at any given time. This is discussed in **Section 26.4.1.1 "Buffer Ownership"**.

FIGURE 26-3: IMPLEMENTATION OF USB RAM IN DATA MEMORY SPACE

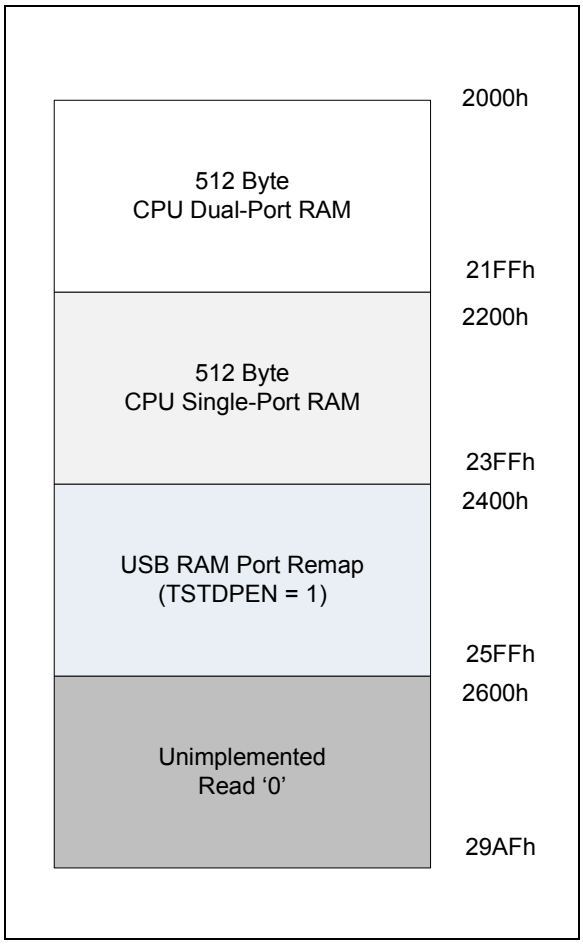

26.4 Buffer Descriptors and the Buffer Descriptor Table

The dual-port general purpose memory space is used specifically for endpoint buffer control in a structure known as the Buffer Descriptor Table (BDT). This provides a flexible method for users to construct and control endpoint buffers of various lengths and configuration.

The BDT is composed of Buffer Descriptors (BDs) which are used to define and control the actual buffers in the USB RAM space. Each BD, in turn, consists of four registers:

- BDnSTAT: BD Status register
- BDnCNT: BD Byte Count register
- BDnADRL: BD Address Low register
- BDnADRH: BD Address High register

Note:	Wherever BDn is identified within this document, the n represents one of the possible BDs.

BDs always occur as a four-byte block in the sequence, BDnSTAT:BDnCNT:BDnADRL:BDnADRH. The address of BDnSTAT is accessible in linear data space at 2000h + (4n – 1) with n being the buffer descriptor number.

Depending on the buffering configuration used (**Section 26.4.4 "Ping-Pong Buffering"**), there are multiple sets of buffer descriptors. The USB specification mandates that every device must have Endpoint 0 with both input and output for initial setup.

Although they can be thought of as Special Function Registers, the Buffer Descriptor Status and Address registers are not hardware mapped, as conventional microcontroller SFRs are. When the endpoint corresponding to a particular BD is not enabled, then its registers are not used. Instead of appearing as unimplemented addresses, however, they appear as available RAM. Only when an endpoint is enabled by setting the EPINEN bit of the UEPn register does the memory at those addresses become functional as BD registers. As with any address in the data memory space, the BD registers have an indeterminate value on any device Reset.

An example of a BD for a 64-byte buffer is shown in Figure 26-4. A particular set of BD registers is only valid if the corresponding endpoint has been enabled using the EPINEN bit. All BD registers are available in USB RAM. The BD for each endpoint should be set up prior to enabling the endpoint.

FIGURE 26-4: EXAMPLE OF A BUFFER DESCRIPTOR

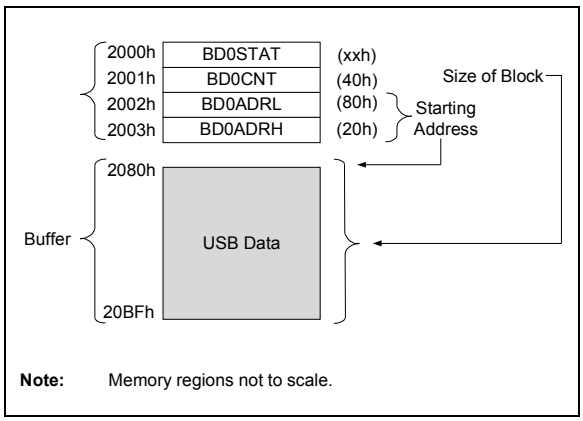

26.4.1 BD STATUS AND CONFIGURATION

The USB Data memory ownership and the BDnSTAT bits change functionality depending on the UOWN bit level.

Unlike other control registers, the bit configuration for the BDnSTAT register is context sensitive determined by the UOWN bit. If the UOWN bit is clear, the microcontroller has the ability to modify the BD and its corresponding buffer. If the UOWN bit is set, the USB SIE has the ability to modify the BD and its corresponding buffer. The UOWN, BC9 and BC8 bit definitions are contained within the BDnSTAT register, regardless of the UOWN bit value.

26.4.1.1 Buffer Ownership

A simple semaphore mechanism is used to distinguish if the CPU or USB module is allowed to update the BD and associated buffers in memory, which is shared by both.

The UOWN bit of the BDnSTAT register is used as a semaphore to distinguish if the USB or CPU is allowed to update the BD and associated buffers in memory. Only the UOWN bit shares functionality between the two configurations of the BDnSTAT register.

When the UOWN bit is clear, the BD entry and buffer memory are “owned” by the microcontroller core. When the UOWN bit is set, these are “owned” by the USB peripheral. The BD and corresponding buffers should only be modified by the “owner”. However, the BDnSTAT register can be read by either the microcontroller or the USB, even if they are not the “owner”.

Because the buffer descriptor meanings are based upon the source of the register update, the user must configure the basic operation of the USB peripheral through the BDnSTAT register prior to placing ownership with the USB peripheral. While still owned by the microcontroller, the byte count and buffer location registers must also be set.

When the UOWN bit is set, giving ownership to the USB peripheral, the SIE updates the BDs as necessary, overwriting the original BD values. Thus, values written by the user to BD are no longer dependable. Instead, the BDnSTAT register is updated automatically by the SIE with the token PID and transfer count (BDnCNT).

The BDnSTAT byte of the BDT should always be the last byte updated when preparing to arm an endpoint. The SIE will clear the UOWN bit when a transaction has completed.

Because no hardware mechanism exists to block access to the memory, unexpected behavior can occur if the microcontroller attempts to modify memory while the SIE owns it. Also, reading the memory may produce inaccurate data until the USB peripheral returns ownership to the microcontroller.

26.4.1.2 BDnSTAT Register (CPU Mode)

When UOWN = 0, the microcontroller core owns the BD and the other bits of the register become control functions.

The Data Toggle Sync Enable (DTSEN) bit of the BDnSTAT register controls data toggle parity checking and, when set, enables data toggle synchronization by the SIE. When enabled, the DTSEN checks the data packet's parity against the value of the Data Toggle Synchronization (DTS) bit. Packets incorrectly synchronized are ignored and will not be written to the USB RAM. The USB TRNIF bit will not be set. However, the SIE will send an ACK token to the host to acknowledge receipt. Refer to Table 26-1 for the effects of the DTSEN bit on the SIE.

The Buffer Stall bit, BSTALL of the BDnSTAT register, provides support for control transfers, usually one-time stalls on Endpoint 0. It also provides support for the SET_FEATURE/CLEAR_FEATURE commands specified in Chapter 9 of the USB specification. Typically, these commands are executed by continuous STALLs to any endpoint other than the default control endpoint.

The BSTALL bit enables buffer stalls. Setting BSTALL causes the SIE to return a STALL token to the host if a received token would use the BD in that location. The EPSTALL bit in the corresponding UEPn control register is set and a STALL interrupt is generated when a STALL is issued to the host. The UOWN bit remains set and the BDs are not changed unless a SETUP token is received. In this case, the STALL condition is cleared and the ownership of the BD is returned to the microcontroller core.

The BD bits of the BDnSTAT register store the two Most Significant digits of the SIE byte count; the lower 8 digits are stored in the corresponding BDnCNT register. See **Section 26.4.2 “BD Byte Count”** for more information.

 © 2012 Microchip Technology Inc.

TABLE 26-1: EFFECT OF DTSEN BIT ON ODD/EVEN (DATA0/DATA1) PACKET RECEPTION

OUT Packet from Host	BDnSTAT Settings		Device Response after Receiving Packet			
	DTSEN	DTS	Handshake	UOWN	TRNIF	BDnSTAT and USTAT Status
DATA0	1	0	ACK	0	1	Updated
DATA1	1	0	ACK	1	0	Not Updated
DATA0	1	1	ACK	1	0	Not Updated
DATA1	1	1	ACK	0	1	Updated
Either	0	x	ACK	0	1	Updated
Either, with error	x	x	NAK	1	0	Not Updated

Legend: x = don't care

26.4.1.3 BDnSTAT Register (SIE Mode)

When the BD and its buffer are owned by the SIE, most of the bits in BDnSTAT take on a different meaning. The configuration is shown in Register 26-6. Once the UOWN bit is set, any data or control settings previously written there by the user will be overwritten with data from the SIE.

The BDnSTAT register is updated by the SIE with the token Packet Identifier (PID), which is stored in the PID bits of the BDnSTAT register. The transfer count in the corresponding BDnCNT register is updated. Values that overflow the 8-bit register carry over to the two Most Significant digits of the count, BD bits of the BDnSTAT register.

26.4.2 BD BYTE COUNT

The byte count represents the total number of bytes that will be transmitted during an IN transfer. After an IN transfer, the SIE will return the number of bytes sent to the host.

For an OUT transfer, the byte count represents the maximum number of bytes that can be received and stored in USB RAM. After an OUT transfer, the SIE will return the actual number of bytes received. If the number of bytes received exceeds the corresponding byte count, the data packet will be rejected and a NAK handshake will be generated. When this happens, the byte count will not be updated.

The 10-bit byte count is distributed over two registers. The lower 8 bits of the count reside in the BDnCNT register. The upper two bits reside in the BC bits of the BDnSTAT register. This represents a valid byte range of 0 to 1023.

26.4.3 BD ADDRESS VALIDATION

The BD Address register pair contains the starting RAM address location for the corresponding endpoint buffer. No mechanism is available in hardware to validate the BD address.

If the value of the BD address does not point to an address in the USB RAM, or if it points to an address within another endpoint's buffer, data is likely to be lost or overwritten. Similarly, overlapping a receive buffer (OUT endpoint) with a BD location in use can yield unexpected results. When developing USB applications, the user may want to consider the inclusion of software-based address validation in their code.

26.4.4 PING-PONG BUFFERING

An endpoint is defined to have a ping-pong buffer when it has two sets of BD entries: one set for an Even transfer and one set for an Odd transfer. This allows the CPU to process one BD while the SIE is processing the other BD. Double-buffering BDs in this way allows for maximum throughput to/from the USB.

The USB module supports four modes of operation:

- No ping-pong support
- Ping-pong buffer support for OUT Endpoint 0 only
- Ping-pong buffer support for all endpoints
- Ping-pong buffer support for all other Endpoints except Endpoint 0

The ping-pong buffer settings are configured using the PPB bits in the UCFG register.

The USB module keeps track of the Ping-Pong Pointer individually for each endpoint. All pointers are initially reset to the Even BD when the module is enabled. After the completion of a transaction (UOWN cleared by the SIE), the pointer is toggled to the Odd BD. After the completion of the next transaction, the pointer is toggled back to the Even BD and so on.

The Even/Odd status of the last transaction is stored in the PPBI bit of the USTAT register. The user can reset all Ping-Pong Pointers to Even using the PPBRST bit. Figure 26-5 shows the four different modes of operation and how USB RAM is filled with the BDs. BDs have a fixed relationship to a particular endpoint depending on the buffering configuration. The mapping of BDs to endpoints is detailed in Table 26-2. This relationship also means that gaps may occur in the BDT if endpoints are not enabled contiguously. This theoretically means that the BDs for disabled endpoints could be used as buffer space. In practice, users should avoid using such spaces in the BDT unless a method of validating BD addresses is implemented.

FIGURE 26-5: BUFFER DESCRIPTOR TABLE MAPPING FOR BUFFERING MODES

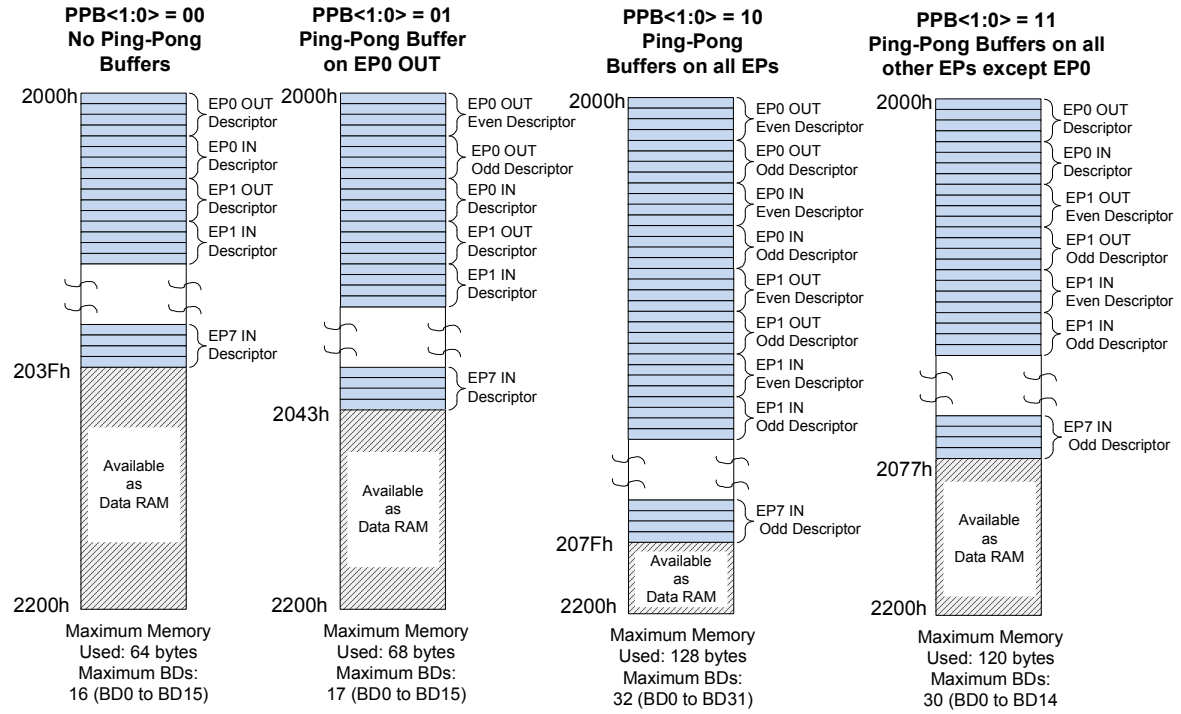

Note: Memory area not shown to scale.

TABLE 26-2: ASSIGNMENT OF BUFFER DESCRIPTORS FOR THE DIFFERENT BUFFERING MODES

Endpoint	BDs Assigned to Endpoint							
	Mode 0 (No Ping-Pong)		Mode 1 (Ping-Pong on EP0 OUT)		Mode 2 (Ping-Pong on all EPs)		Mode 3 (Ping-Pong on all other EPs, except EP0)	
	Out	In	Out	In	Out	In	Out	In
0	0	1	0 (E), 1 (O)	2	0 (E), 1 (O)	2 (E), 3 (O)	0	1
1	2	3	3	4	4 (E), 5 (O)	6 (E), 7 (O)	2 (E), 3 (O)	4 (E), 5 (O)
2	4	5	5	6	8 (E), 9 (O)	10 (E), 11 (O)	6 (E), 7 (O)	8 (E), 9 (O)
3	6	7	7	8	12 (E), 13 (O)	14 (E), 15 (O)	10 (E), 11 (O)	12 (E), 13 (O)
4	8	9	9	10	16 (E), 17 (O)	18 (E), 19 (O)	14 (E), 15 (O)	16 (E), 17 (O)
5	10	11	11	12	20 (E), 21 (O)	22 (E), 23 (O)	18 (E), 19 (O)	20 (E), 21 (O)
6	12	13	13	14	24 (E), 25 (O)	26 (E), 27 (O)	22 (E), 23 (O)	24 (E), 25 (O)
7	14	15	15	16	28 (E), 29 (O)	30 (E), 31 (O)	26 (E), 27 (O)	28 (E), 29 (O)

Legend: (E) = Even transaction buffer, (O) = Odd transaction buffer

 © 2012 Microchip Technology Inc.

TABLE 26-3: SUMMARY OF USB BUFFER DESCRIPTOR TABLE REGISTERS

Name	Bit 7	Bit 6	Bit 5	Bit 4	Bit 3	Bit 2	Bit 1	Bit 0
BDnSTAT(1)	UOWN	DTS(4)	PID3(2)	PID2(2)	PID1(2) DTSEN(3)	PID0(2) BSTALL(3)	BC9	BC8
BDnCNT(1)	Byte Count							
BDnADRL(1)	Buffer Address Low							
BDnADRH(1)	Buffer Address High							

Note 1: For buffer descriptor registers, n may have a value of 0 to 31. For the sake of brevity, all 32 registers are shown as one generic prototype. All registers have indeterminate Reset values (`xxxx xxxx`).

2: Bits <5:2> of the BDnSTAT register are used by the SIE to return PID<3:0> values once the register is turned over to the SIE (UOWN bit is set). Once the registers have been under SIE control, the values written for DTSEN and BSTALL are no longer valid.

3: Prior to turning the buffer descriptor over to the SIE (UOWN bit is cleared), bits 5 through 2 of the BDnSTAT register are used to configure the DTSEN and BSTALL settings.

4: This bit is ignored unless DTSEN = `1`.

26.5 USB Interrupts

The USB module can generate multiple interrupt conditions. To accommodate all of these interrupt sources, the module is provided with its own interrupt logic structure, similar to that of the microcontroller. USB interrupts are enabled with one set of control registers and trapped with a separate set of flag registers. All sources are funneled into a single USB interrupt request, USBIF bit of the PIR2 for use with the microcontroller's interrupt logic.

Figure 26-6 shows the interrupt logic for the USB module, which is divided into two registers in the USB module. USB status interrupts are considered the top level and interrupts are enabled through the UIE register, while flags are maintained through the UIF register. USB error conditions are considered the second level and interrupts are enabled through the UEIE register, while flags are maintained through the UEIF register. Any USB interrupt condition will trigger the USB Error Interrupt Flag, the UERRIF bit of the UIF register.

Interrupts may be used to trap routine events in a USB transaction. Figure 26-7 shows some common events within a USB frame and their corresponding interrupts.

FIGURE 26-6: USB INTERRUPT LOGIC FUNNEL

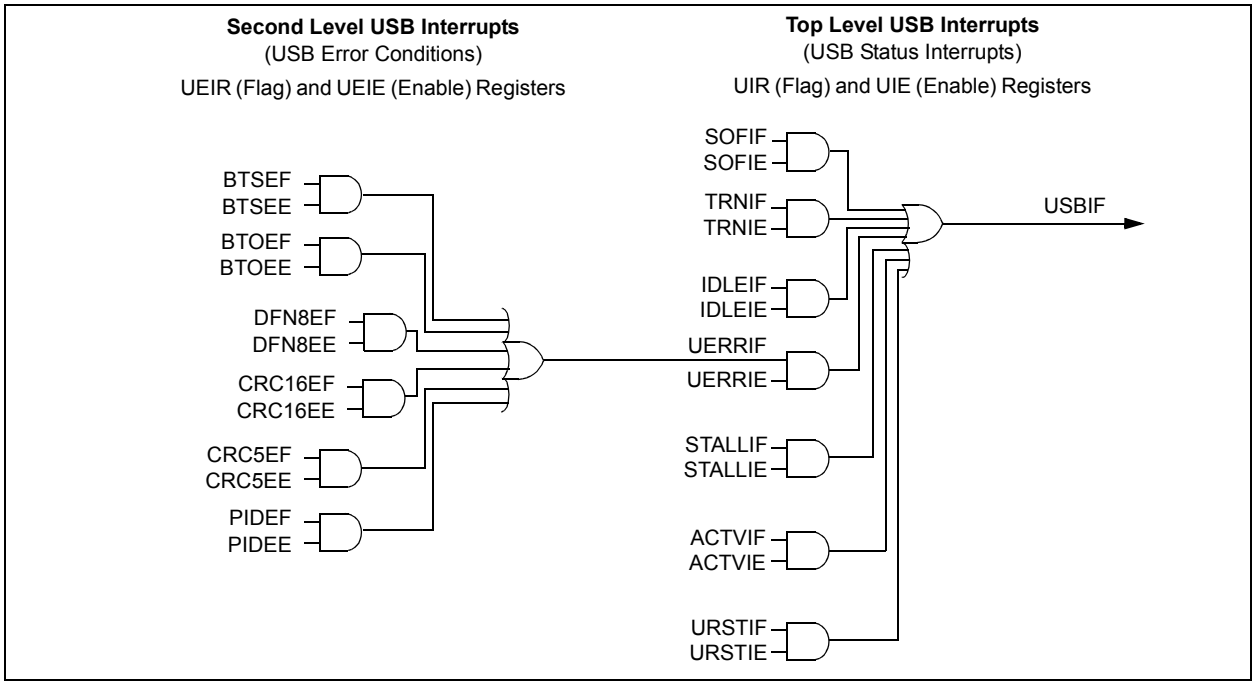

FIGURE 26-7: EXAMPLE OF A USB TRANSACTION AND INTERRUPT EVENTS

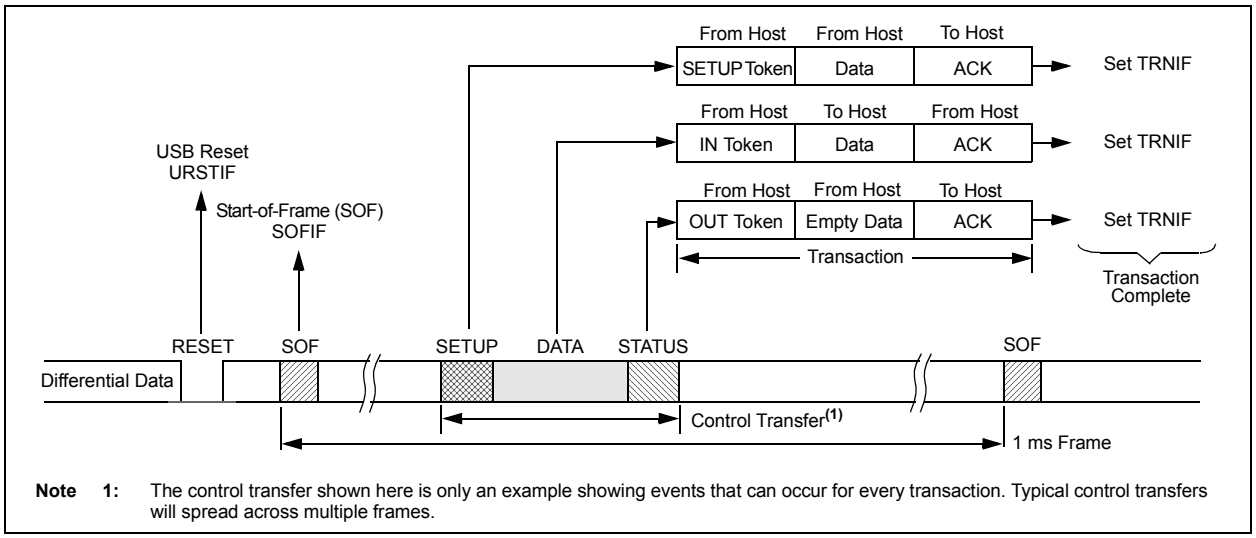

Note 1: The control transfer shown here is only an example showing events that can occur for every transaction. Typical control transfers will spread across multiple frames.

 © 2012 Microchip Technology Inc.

26.5.1 USB INTERRUPT STATUS (UIR) REGISTER

The USB Interrupt Status register (Register 26-7) contains the flag bits for each of the USB Status interrupt sources. Each of these sources has a corresponding interrupt enable bit in the UIE register. All of the USB status flags are ORed together to generate the USBIF interrupt flag for the microcontroller's interrupt funnel.

Once an interrupt bit has been set by the SIE, it must be cleared by software. The flag bits can also be set in software which can aid in firmware debugging.

Note:	All status flags in the UIR register should be resolved and cleared before the USBIF bit is cleared.

26.5.1.1 Bus Activity Detect Interrupt Bit (ACTVIF)

The ACTVIF bit cannot be cleared immediately after the USB module wakes up from Suspend or while the USB module is suspended. A few clock cycles are required to synchronize the internal hardware state machine before the ACTVIF bit can be cleared by firmware. Clearing the ACTVIF bit in firmware before the internal hardware is synchronized may not have an effect on the value of ACTVIF. The USB module may not be immediately operational after clearing the SUSPND bit if using the 48 MHz PLL source because the PLL will require time to lock. The application code should clear the ACTVIF flag as shown in Example 26-1.

Only one ACTVIF interrupt is generated when resuming from the USB bus Idle condition. If user firmware clears the ACTVIF bit, even when there is continuous bus traffic, the bit will not become set again until after a IDLEIF condition occurs. Bus traffic must cease long enough to generate another IDLEIF condition before another ACTVIF interrupt can be generated.

EXAMPLE 26-1: CLEARING ACTVIF BIT (UIR<2>)

Assembly:

```
    BCF     UCON, SUSPND
LOOP:
    BTFSS   UIR, ACTVIF
    BRA     DONE
    BCF     UIR, ACTVIF
    BRA     LOOP
DONE:
```

C:

```
UCONbits.SUSPND = 0;
while (UIRbits.ACTVIF) { UIRbits.ACTVIF = 0; }
```

26.5.2 USB INTERRUPT ENABLE REGISTER (UIE)

The USB Interrupt Enable register (Register 26-8) contains the enable bits for the USB Status interrupt sources. Setting any of these bits will enable the respective interrupt source in the UIR register.

The values in this register only affect the propagation of an interrupt condition to the microcontroller's interrupt logic. The flag bits are set by their interrupt conditions, allowing them to be polled and serviced without actually generating an interrupt.

26.5.3 USB ERROR INTERRUPT STATUS REGISTER (UEIR)

The USB Error Interrupt Status register (Register 26-9) contains the flag bits for each of the error sources within the USB peripheral. Each of these sources is enabled by a corresponding bit in the UEIE register. All of the USB error flags are ORed together to generate the USB Error Interrupt Flag (UERRIF) at the top level of the interrupt logic.

Each error bit is set as soon as the error condition is detected. Thus, the interrupt will typically not correspond with the end of a token being processed.

Once an interrupt bit has been set by the SIE, it must be cleared by software.

Note:	All status flags in the UEIR register should be resolved and cleared before the UERRIF bit is cleared.

26.5.4 USB INTERRUPT (UEIE) ENABLE REGISTER

The USB Error Interrupt Enable register (Register 26-10) contains the enable bits for each of the USB error interrupt sources. Setting any of these bits will enable the respective error interrupt source in the UEIR register. If enabled, the UERRIF bit of the UIR register will be set when any USB error interrupt is set.

As with the UIE register, the enable bits only affect the propagation of an interrupt condition to the microcontroller's interrupt logic. The flag bits are set by their interrupt conditions, allowing them to be polled and serviced without actually generating an interrupt.

26.6 USB Power Modes

The USB peripheral often has different power requirements and configurations depending on the application.

The most common cases are presented here:

- Bus Power Only
- Self-Power Only
- Dual Power with Self-Power Dominance

Means of estimating the current consumption of the USB transceiver are also provided.

26.6.1 BUS POWER ONLY

In Bus Power Only mode, all power for the application is drawn from the USB (Figure 26-8). This is effectively the simplest power method for the device.

In order to meet the inrush current requirements of the USB 2.0 specifications, the total effective capacitance appearing across VBUS and ground must be no more than 10 μF. Circuitry is required to limit inrush current, see section 7.2.4 of the USB specification for more detail.

All USB devices must support a Low-Power Suspend mode which meets the current limits from the 5V VBUS line of the USB cable according to the USB 2.0 specification. For high-powered devices that are remote wake-up capable, a higher limit is allocated. Refer to USB Specification 2.0, 7.2.3 for information.

The host signals the USB device to enter the Suspend mode by stopping all USB traffic to that device for more than 3 ms. This condition will cause the IDLEIF bit in the UIR register to become set.

During the USB Suspend mode, the D+ or D- pull-up resistor must remain active, which will consume some of the allowed suspend current budget.

FIGURE 26-8: BUS POWER ONLY

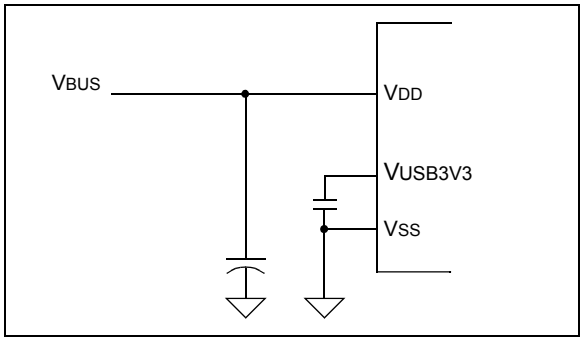

26.6.2 SELF-POWER ONLY

In Self-Power Only mode, the USB application provides its own power, with very little power being pulled from the USB. Figure 26-9 shows an example.

In order to meet compliance specifications, the USB module (and the D+ or D- internal pull-ups) should not be enabled until the host actively drives VBUS high.

The application should never source any current onto the 5V VBUS pin of the USB cable.

FIGURE 26-9: SELF-POWER ONLY

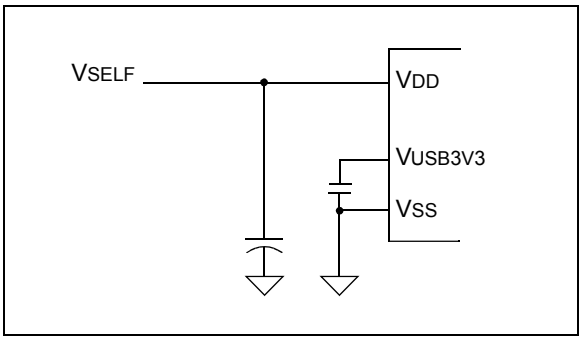

26.6.3 DUAL POWER WITH SELF-POWER DOMINANCE

In Dual Power with Self-Power Dominance mode, the application uses internal power as the primary source, but can switch power from the USB when no internal power is available. Figure 26-10 shows a simple Dual Power with Self-Power Dominance mode example, which automatically switches between Self-Power Only and USB Bus Power Only modes.

Dual power devices must also meet all of the special requirements for inrush current and Suspend mode current and must not enable the USB module (or the D+/D- internal pull-ups) until VBUS is driven high. See **Section 26.6.1 "Bus Power Only"** and **Section 26.6.2 "Self-Power Only"** for descriptions of those requirements. Additionally, dual power devices must never source current onto the 5V VBUS pin of the USB cable.

FIGURE 26-10: DUAL POWER EXAMPLE

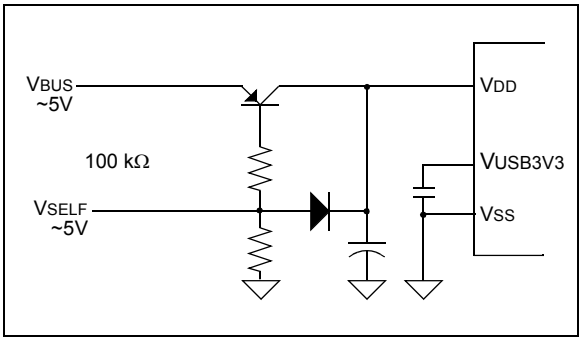

Note:	Users should keep in mind the limits for devices drawing power from the USB. Refer to USB Specification 2.0, 7.2.3 for more information.

 © 2012 Microchip Technology Inc.

26.6.4 USB TRANSCEIVER CURRENT CONSUMPTION

The USB transceiver consumes a variable amount of current, depending on following factors:

- Impedance of USB cable
- Length of cable
- VUSB3V3 supply voltage
- Data patterns across cable

Note:	Longer cables have larger capacitance and consume more total energy when switching output states.

Data patterns consist of “IN” and “OUT” traffic. “IN” traffic consumes more current and requires the microcontroller to drive the USB cable, while “OUT” traffic requires the host to drive the USB cable.

The data sent across the USB cable is NRZI encoded. A ‘0’ in the NRZI encoding scheme toggles the output state of the transceiver (from “J” state to a “K” state, or vice versa). A ‘1’ in the NRZI does not change the output state of the transceiver, with the exception of the effects of bit-stuffing. Because “IN” traffic consists of data bits of value ‘0’, the transceiver must charge/discharge the USB cable to change states resulting in the most current consumption.

More details about NRZI encoding and bit-stuffing can be found in the USB 2.0 specification's section 7.1, although knowledge of such details is not required to make USB applications using PIC® microcontrollers. Among other things, the SIE handles bit-stuffing/unstuffing, NRZI encoding/decoding and CRC generation/checking in hardware.

The total transceiver current consumption will be application-specific. However, to help estimate how much current actually may be required in full-speed applications, Equation 26-1 can be used.

Example 26-2 shows how this equation can be used for a theoretical application.

EQUATION 26-1: ESTIMATING USB TRANSCEIVER CURRENT CONSUMPTION

$$I_{XCVR} = \frac{(60\ mA \bullet V_{USB3V3} \bullet P_{ZERO} \bullet P_{IN} \bullet L_{CABLE})}{(3.3V \bullet 5m)} + I_{PULLUP}$$

Legend:

V_{USB3V3}: Voltage on the V_{USB3V3} pin in volts.
For F devices, V_{USB3V3} = 3.3V supplied from the internal regulator, $V_{DD} \geq 3.6V$.
For LF devices, V_{USB3V3} is supplied by V_{DD} $3.0 \leq V_{DD} \leq 3.6$.

P_{ZERO}: Percentage of the IN traffic bits sent by the PIC® device that are a value of '0'.

P_{IN}: Percentage of total bus bandwidth that is used for IN traffic.

L_{CABLE}: Length (in meters) of the USB cable. The USB 2.0 specification requires that full-speed applications use cables no longer than 5m.

I_{PULLUP}: Current which the nominal, 1.5 kΩ pull-up resistor (when enabled) must supply to the USB cable. On the host or hub end of the USB cable, 15 kΩ nominal resistors (14.25 kΩ to 24.8 kΩ) are present which pull both the D+ and D- lines to ground. During bus Idle conditions (such as between packets or during USB Suspend mode), this results in up to 218 μA of quiescent current drawn at 3.3V.

I_{PULLUP} is also dependant on bus traffic conditions and can be as high as 2.2 mA when the USB bandwidth is fully utilized (either IN or OUT traffic) for data that drives the lines to the "K" state most of the time.

EXAMPLE 26-2: CALCULATING USB TRANSCEIVER CURRENT†

For this example, the following assumptions are made about the application:

- 3.3V will be applied to V_{USB3V3} and V_{DD}, with the core voltage regulator enabled.
- This is a full-speed application that uses one interrupt IN endpoint that can send one packet of 64 bytes every 1 ms, with no restrictions on the values of the bytes being sent. The application may or may not have additional traffic on OUT endpoints.
- A regular USB "B" or "mini-B" connector will be used on the application circuit board.

In this case, P_{ZERO} = 100% = 1, because there should be no restriction on the value of the data moving through the IN endpoint. All 64 kBps of data could potentially be bytes of value, 00h. Since '0' bits cause toggling of the output state of the transceiver, they cause the USB transceiver to consume extra current charging/discharging the cable. In this case, 100% of the data bits sent can be of value '0'. This should be considered the "max" value, as normal data will consist of a fair mix of ones and zeros.

This application uses 64 kBps for IN traffic out of the total bus bandwidth of 1.5 MBps (12 Mbps), therefore:

$$\text{Pin} = \frac{64\ \text{kBps}}{1.5\ \text{MBps}} = 4.3\% = 0.043$$

Since a regular "B" or "mini-B" connector is used in this application, the end user may plug in any type of cable up to the maximum allowed 5 m length. Therefore, we use the worst-case length:

L_{CABLE} = 5 meters

Assume I_{PULLUP} = 2.2 mA. The actual value of I_{PULLUP} will likely be closer to 218 μA, but allow for the worst-case. USB bandwidth is shared between all the devices which are plugged into the root port (via hubs). If the application is plugged into a USB 1.1 hub that has other devices plugged into it, your device may see host to device traffic on the bus, even if it is not addressed to your device. Since any traffic, regardless of source, can increase the I_{PULLUP} current above the base 218 μA, it is safest to allow for the worst-case of 2.2 mA.

Therefore:

$$I_{XCVR} = \frac{(60\ \text{mA} \bullet 3.3\text{V} \bullet 1 \bullet 0.043 \bullet 5\text{m})}{(3.3\text{V} \bullet 5\text{m})} + 2.2\ \text{mA} = 4.8\ \text{mA}$$

The calculated value should be considered an approximation and additional guardband or application-specific product testing is recommended. The transceiver current is "in addition to" the rest of the current consumed by the microcontroller.

 © 2012 Microchip Technology Inc.

26.7 Oscillator

The USB module has specific clock requirements. For full-speed operation, the clock source must be 48 MHz. Even so, the microcontroller core and other peripherals are not required to run at that clock speed. Available clocking options are described in detail in **Section 5.4 "USB Operation"**.

26.8 Interrupt-On-Change for D+/D- Pins

The microcontroller has interrupt-on-change functionality on both D+ and D- data pins, which allows the device to detect voltage level changes when first connected to a USB host/hub. This feature is not available when the USB module is enabled.

The USB host/hub has 15K pull-down resistors on the D+ and D- pins. When the microcontroller attaches to the bus, the D+ and D- pins can detect voltage changes. External resistors are needed for each pin to maintain a high state on the pins when the microcontroller is detached.

The USB module must be disabled (USBEN = `0`) for the interrupt-on-change to function. Enabling the USB module (USBEN = `1`) will automatically disable the interrupt-on-change for D+ and D- pins. Refer to **Section 13.0 "Interrupt-On-Change"** for more detail.

26.9 USB Firmware and Drivers

Microchip provides a number of application-specific resources, such as USB firmware and driver support. Refer to www.microchip.com for the latest firmware and driver support.

26.10 USB Operation Overview

This section presents some of the basic USB concepts and useful information necessary to design a USB device. Although a lot of information is provided in this section, refer to the USB 2.0 specification for more details, as needed.

26.10.1 LAYERED FRAMEWORK

USB device functionality is structured into a layered framework, graphically shown in Figure 26-11. Each level is associated with a functional level within the device. The highest layer, other than the device, is the configuration. A device may have multiple configurations. For example, a particular device may have multiple power requirements based on Self-Power Only or Bus Power Only modes.

For each configuration, there may be multiple interfaces. Each interface could support a particular mode of that configuration.

Below the interface is the endpoint(s). Data is directly moved at this level. Endpoint 0 is always a control endpoint and, by default, when the device is on the bus, Endpoint 0 must be available to configure the device.

26.10.2 FRAMES

Information communicated on the bus is grouped into 1 ms time slots, referred to as frames. Each frame can contain many transactions to various devices and endpoints. Figure 26-7 shows an example of a transaction within a frame.

26.10.3 TRANSFERS

There are four transfer types defined in the USB specification:

Isochronous: This type provides a transfer method for large amounts of data (up to 1023 bytes) with timely delivery ensured; however, the data integrity is not ensured. This is good for streaming applications where small data loss is not critical, such as audio.

Bulk: This type of transfer method allows for large amounts of data to be transferred with ensured data integrity; however, the delivery timeliness is not ensured.

Interrupt: This type of transfer provides for ensured timely delivery for small blocks of data, plus data integrity is ensured.

Control: This type provides device setup control.

While full-speed devices support all transfer types, low-speed devices are limited to interrupt and control transfers only.

FIGURE 26-11: USB LAYERS

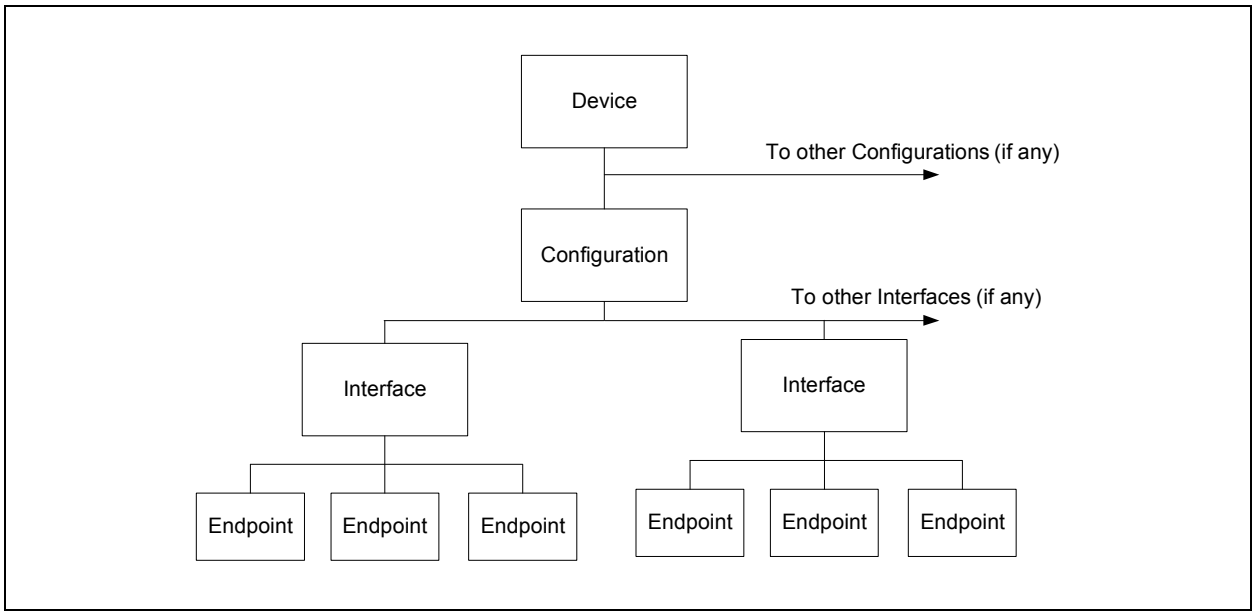

 © 2012 Microchip Technology Inc.

26.10.4 POWER

Power is available from the USB. The USB specification defines the bus power requirements. Devices may either be self-powered or bus powered. Self-powered devices draw power from an external source, while bus powered devices use power supplied from the bus.

The USB specification limits the power taken from the bus. Refer to USB Specification 2.0, 7.2.3 for power limits information. Note that power above one unit load is a request and the host or hub is not obligated to provide the extra current. Thus, a device capable of consuming more than one unit load must be able to maintain a low-power configuration of a one unit load or less, if necessary.

The USB specification also defines a Suspend mode. In this situation, current must be limited. A device must enter a Suspend state after 3 ms of inactivity (i.e., no SOF tokens for 3 ms). A device entering Suspend mode must drop current consumption within 10 ms after Suspend. Likewise, when signaling a wake-up, the device must signal a wake-up within 10 ms of drawing current above the suspend limit. Refer to USB Specification 2.0, 7.2.3 for current limit information.

26.10.5 ENUMERATION

When the device is initially attached to the bus, the host enters an enumeration process in an attempt to identify the device. Essentially, the host interrogates the device, gathering information such as power consumption, data rates and sizes, protocol and other descriptive information; descriptors contain this information. A typical enumeration process could be as follows:

1. USB Reset: Reset the device, which means the device is not configured and does not have an address (address 0).

2. Get Device Descriptor: The host requests a small portion of the device descriptor.

3. USB Reset: Reset the device again.

4. Set Address: The host assigns an address to the device.

5. Get Device Descriptor: The host retrieves the device descriptor, gathering info such as manufacturer, type of device, maximum control packet size.

6. Get configuration descriptors.

7. Get any other descriptors.

8. Set a configuration.

The exact enumeration process depends on the host.

26.10.6 DESCRIPTORS

There are eight different standard descriptor types, of which five are most important for this device.

26.10.6.1 Device Descriptors

The device descriptor provides general information, such as manufacturer, product number, serial number, the class of the device and the number of configurations. There is only one device descriptor.

26.10.6.2 Configuration Descriptors

The configuration descriptor provides information on the power requirements of the device and how many different interfaces are supported when in this configuration. There may be more than one configuration for a device (i.e., low-power and high-power configurations).

26.10.6.3 Interface Descriptors

The interface descriptor details the number of endpoints used in this interface, as well as the class of the interface. There may be more than one interface for a configuration.

26.10.6.4 Endpoint Descriptors

The interface descriptor details the number of endpoints used in this interface, as well as the class of the interface. There may be more than one interface for a configuration.

26.10.6.5 String Descriptors

Many of the previous descriptors reference one or more string descriptors. String descriptors provide human readable information about the layer (**Section 26.10.1 “Layered Framework”**) they describe. Often these strings show up in the host to help the user identify the device. String descriptors are generally optional to save memory and are encoded in a unicode format.

26.10.7 BUS SPEED

Each USB device must indicate its bus presence and speed to the host. This is accomplished through a pull-up, which is connected to the bus at the time of the attachment event. Depending on the speed of the device, the pull-up connects either the D+ or D- line to 3.3V. For a low-speed device, the pull-up is connected to the D- line. For a full-speed device, the pull-up is connected to the D+ line.

26.10.8 CLASS SPECIFICATION AND DRIVERS SPEED

USB specifications include class specifications, which operating system vendors optionally support. Examples of classes include Audio, Mass Storage, Communications and Human Interface (HID). In most cases, a driver is required at the host side to ‘talk’ to the USB device. In custom applications, a driver may need to be developed. Fortunately, drivers are available for most common host systems for the most common classes of devices. Thus, these drivers can be reused.

26.11 Register Definitions: USB

REGISTER 26-1: UCON: USB CONTROL REGISTER

U-0	R/W-0	R-x	R/C-0	R/W-0	R/W-0	R/W-0	U-0
—	PPBRST	SE0	PKTDIS	USBEN(1)	RESUME	SUSPND	—
bit 7							bit 0

Legend:	C = Clearable bit		
R = Readable bit	W = Writable bit	U = Unimplemented bit, read as ‘0’	
-n = Value at POR	‘1’ = Bit is set	‘0’ = Bit is cleared	x = Bit is unknown

bit 7 **Unimplemented:** Read as ‘0’

bit 6 **PPBRST:** Ping-Pong Buffers Reset bit
1 = Reset all Ping-Pong Buffer Pointers to the Even Buffer Descriptor (BD) banks
0 = Ping-Pong Buffer Pointers not being reset

bit 5 **SE0:** Live Single-Ended Zero Flag bit
1 = Single-ended zero active on the USB bus
0 = No single-ended zero detected

bit 4 **PKTDIS:** Packet Transfer Disable bit
1 = SIE token and packet processing disabled, automatically set when a SETUP token is received
0 = SIE token and packet processing enabled

bit 3 **USBEN:** USB Module Enable bit(1)
1 = USB module and supporting circuitry enabled (device attached)
0 = USB module and supporting circuitry disabled (device detached)

bit 2 **RESUME:** Resume Signaling Enable bit
1 = Resume signaling activated
0 = Resume signaling disabled

bit 1 **SUSPND:** Suspend USB bit
1 = USB module and supporting circuitry in Power Conserve mode, SIE clock inactive
0 = USB module and supporting circuitry in normal operation, SIE clock clocked at the configured rate

bit 0 **Unimplemented**: Read as ‘0’

Note 1: This bit cannot be set if the USB module does not have an appropriate clock source.

 © 2012 Microchip Technology Inc.

REGISTER 26-2: UCFG: USB CONFIGURATION REGISTER

R/W-0	R/W-0	U-0	R/W-0	R/W-0	R/W-0	R/W-0	R/W-0
UTEYE	Reserved	—	UPUEN(1)	Reserved	FSEN(1)	PPB<1:0>	
bit 7							bit 0

Legend:			
R = Readable bit	W = Writable bit	U = Unimplemented bit, read as ‘0’	
-n = Value at POR	‘1’ = Bit is set	‘0’ = Bit is cleared	x = Bit is unknown

bit 7 **UTEYE:** USB Eye Pattern Test Enable bit
1 = Eye pattern test enabled
0 = Eye pattern test disabled

bit 5 **Reserved:** Read as ‘0’. Maintain this bit clear

bit 4 **UPUEN:** USB On-Chip Pull-up Enable bit(1)
1 = On-chip pull-up enabled (pull-up on D+ with FSEN = 1 or D- with FSEN = 0)
0 = On-chip pull-up disabled

bit 3 **Reserved:** Read as ‘0’. Maintain this bit clear

bit 2 **FSEN:** Full-Speed Enable bit(1)
1 = Full-speed device: controls transceiver edge rates; requires input clock at 48 MHz
0 = Low-speed device: controls transceiver edge rates; requires input clock at 6 MHz

bit 1-0 **PPB<1:0>:** Ping-Pong Buffers Configuration bits
11 = Even/Odd ping-pong buffers enabled for Endpoints 1 to 15
10 = Even/Odd ping-pong buffers enabled for all endpoints
01 = Even/Odd ping-pong buffer enabled for OUT Endpoint 0
00 = Even/Odd ping-pong buffers disabled

Note 1: The UPUEN, and FSEN bits should never be changed while the USB module is enabled. These values must be preconfigured prior to enabling the module.

REGISTER 26-3: USTAT: USB STATUS REGISTER

U-0	R-x	R-x	R-x	R-x	R-x	R-x	U-0
—	ENDP<3:0>				DIR	PPBI(1)	—
bit 7							bit 0

Legend:			
R = Readable bit	W = Writable bit	U = Unimplemented bit, read as ‘0’	
-n = Value at POR	‘1’ = Bit is set	‘0’ = Bit is cleared	x = Bit is unknown

bit 7 **Unimplemented:** Read as ‘0’

bit 6-3 **ENDP<2:0>:** Encoded Number of Last Endpoint Activity bits
(represents the number of the BDT updated by the last USB transfer)

1111 = Endpoint 15
1110 = Endpoint 14
•
•
•
0001 = Endpoint 1
0000 = Endpoint 0

bit 2 **DIR:** Last BD Direction Indicator bit

1 = The last transaction was an IN token
0 = The last transaction was an OUT or SETUP token

bit 1 **PPBI:** Ping-Pong BD Pointer Indicator bit(1)

1 = The last transaction was to the Odd BD bank
0 = The last transaction was to the Even BD bank

bit 0 **Unimplemented:** Read as ‘0’

Note 1: This bit is only valid for endpoints with available Even and Odd BD registers.

 © 2012 Microchip Technology Inc.

REGISTER 26-4: UEPn: USB ENDPOINT n CONTROL REGISTER (UEP0 THROUGH UEP7)

U-0	U-0	U-0	R/W-0	R/W-0	R/W-0	R/W-0	R/W-0
—	—	—	EPHSHK	EPCONDIS	EPOUTEN	EPINEN	EPSTALL(1)
bit 7							bit 0

Legend:			
R = Readable bit	W = Writable bit	U = Unimplemented bit, read as ‘0’	
-n = Value at POR	‘1’ = Bit is set	‘0’ = Bit is cleared	x = Bit is unknown

bit 7-5 **Unimplemented:** Read as ‘0’

bit 4 **EPHSHK:** Endpoint Handshake Enable bit
1 = Endpoint handshake enabled
0 = Endpoint handshake disabled (typically used for isochronous endpoints)

bit 3 **EPCONDIS:** Bidirectional Endpoint Control bit
If EPOUTEN = 1 and EPINEN = 1:
1 = Disable Endpoint n from control transfers; only IN and OUT transfers allowed
0 = Enable Endpoint n for control (SETUP) transfers; IN and OUT transfers also allowed

bit 2 **EPOUTEN:** Endpoint Output Enable bit
1 = Endpoint n output enabled
0 = Endpoint n output disabled

bit 1 **EPINEN:** Endpoint Input Enable bit
1 = Endpoint n input enabled
0 = Endpoint n input disabled

bit 0 **EPSTALL:** Endpoint STALL Enable bit(1)
1 = Endpoint n is stalled
0 = Endpoint n is not stalled

Note 1: Valid only if Endpoint n is enabled; otherwise, the bit is ignored.

REGISTER 26-5: BDnSTAT: BUFFER DESCRIPTOR n STATUS REGISTER (BD0STAT THROUGH BD31STAT), CPU MODE (DATA IS WRITTEN TO THE SIDE)

R/W-x	R/W-x	U-0	U-0	R/W-x	R/W-x	R/W-x	R/W-x
UOWN(1)	DTS(2)	—(3)	—(3)	DTSEN	BSTALL	BC9	BC8
bit 7							bit 0

Legend:			
R = Readable bit	W = Writable bit	U = Unimplemented bit, read as ‘0’	
-n = Value at POR	‘1’ = Bit is set	‘0’ = Bit is cleared	x = Bit is unknown

bit 7 **UOWN:** USB Own bit(1)
- 1 = Refer to Register 26-6.
- 0 = The microcontroller core owns the BD and its corresponding buffer

bit 6 **DTS:** Data Toggle Synchronization bit(2)
- 1 = Data 1 packet
- 0 = Data 0 packet

bit 5-4 **Unimplemented:** Read as ‘0’

bit 3 **DTSEN:** Data Toggle Synchronization Enable bit
- 1 = Data toggle synchronization is enabled; data packets with incorrect Sync value will be ignored except for a SETUP transaction, which is accepted even if the data toggle bits do not match
- 0 = No data toggle synchronization is performed

bit 2 **BSTALL:** Buffer Stall Enable bit
- 1 = Buffer stall enabled; STALL handshake issued if a token is received that would use the BD in the given location (UOWN bit remains set, BD value is unchanged)
- 0 = Buffer stall disabled

bit 1-0 **BC<9:8>:** Byte Count 9 and 8 bits

The byte count bits represent the number of bytes that will be transmitted for an IN token or received during an OUT token. Together with BC<7:0>, the valid byte counts are 0-1023.

Note 1: This bit must be initialized by the user to the desired value prior to enabling the USB module.

2: This bit is ignored unless DTSEN = 1.

3: If these bits are set, USB communication may not work. Hence, these bits should always be maintained as ‘0’.

 © 2012 Microchip Technology Inc.

REGISTER 26-6: BDnSTAT: BUFFER DESCRIPTOR n STATUS REGISTER (BD0STAT THROUGH BD31STAT), SIE MODE (DATA RETURNED BY THE SIDE TO THE MCU)

R/W-x	U-x	R/W-x	R/W-x	R/W-x	R/W-x	R/W-x	R/W-x
UOWN	—	PID3	PID2	PID1	PID0	BC9	BC8
bit 7							bit 0

Legend:			
R = Readable bit	W = Writable bit	U = Unimplemented bit, read as ‘0’	
-n = Value at POR	‘1’ = Bit is set	‘0’ = Bit is cleared	x = Bit is unknown

bit 7 **UOWN:** USB Own bit
1 = The SIE owns the BD and its corresponding buffer
0 = Refer to Register 26-5.

bit 6 **Reserved:** Not written by the SIE

bit 5-2 **PID<3:0>:** Packet Identifier bits
The received token PID value of the last transfer (IN, OUT or SETUP transactions only).

bit 1-0 **BC<9:8>:** Byte Count 9 and 8 bits
These bits are updated by the SIE to reflect the actual number of bytes received on an OUT transfer and the actual number of bytes transmitted on an IN transfer.

REGISTER 26-7: UIR: USB INTERRUPT STATUS REGISTER

U-0	R/W-0	R/W-0	R/W-0	R/W-0	R/W-0	R-0	R/W-0
—	SOFIF	STALLIF	IDLEIF(1)	TRNIF(2)	ACTVIF(3)	UERRIF(4)	URSTIF
bit 7							bit 0

Legend:			
R = Readable bit	W = Writable bit	U = Unimplemented bit, read as ‘0’	
-n = Value at POR	‘1’ = Bit is set	‘0’ = Bit is cleared	x = Bit is unknown

bit 7 **Unimplemented:** Read as ‘0’

bit 6 **SOFIF:** Start-of-Frame Token Interrupt bit
1 = A Start-of-Frame token received by the SIE
0 = No Start-of-Frame token received by the SIE

bit 5 **STALLIF:** A STALL Handshake Interrupt bit
1 = A STALL handshake was sent by the SIE
0 = A STALL handshake has not been sent

bit 4 **IDLEIF:** Idle Detect Interrupt bit(1)
1 = Idle condition detected (constant Idle state of 3 ms or more)
0 = No Idle condition detected

bit 3 **TRNIF:** Transaction Complete Interrupt bit(2)
1 = Processing of pending transaction is complete; read USTAT register for endpoint information
0 = Processing of pending transaction is not complete or no transaction is pending

bit 2 **ACTVIF:** Bus Activity Detect Interrupt bit(3)
1 = Activity on the D+/D- lines was detected
0 = No activity detected on the D+/D- lines

bit 1 **UERRIF:** USB Error Condition Interrupt bit(4)
1 = An unmasked error condition has occurred
0 = No unmasked error condition has occurred

bit 0 **URSTIF:** USB Reset Interrupt bit
1 = Valid USB Reset occurred; UADDR register is cleared
0 = No USB Reset has occurred

Note 1: Once an Idle state is detected, the user may want to place the USB module in Suspend mode.
2: Clearing this bit will cause the USTAT FIFO to advance (valid only for IN, OUT and SETUP tokens).
3: This bit is typically unmasked only following the detection of a UIDLE interrupt event.
4: Only error conditions enabled through the UEIE register will set this bit. This bit is a status bit only and cannot be set or cleared by the user.

 © 2012 Microchip Technology Inc.

REGISTER 26-8: UIE: USB INTERRUPT ENABLE REGISTER

U-0	R/W-0	R/W-0	R/W-0	R/W-0	R/W-0	R/W-0	R/W-0
—	SOFIE	STALLIE	IDLEIE	TRNIE	ACTVIE	UERRIE	URSTIE
bit 7							bit 0

Legend:			
R = Readable bit	W = Writable bit	U = Unimplemented bit, read as ‘0’	
-n = Value at POR	‘1’ = Bit is set	‘0’ = Bit is cleared	x = Bit is unknown

bit 7 **Unimplemented:** Read as ‘0’

bit 6 **SOFIE:** Start-of-Frame Token Interrupt Enable bit
1 = Start-of-Frame token interrupt enabled
0 = Start-of-Frame token interrupt disabled

bit 5 **STALLIE:** STALL Handshake Interrupt Enable bit
1 = STALL interrupt enabled
0 = STALL interrupt disabled

bit 4 **IDLEIE:** Idle Detect Interrupt Enable bit
1 = Idle detect interrupt enabled
0 = Idle detect interrupt disabled

bit 3 **TRNIE:** Transaction Complete Interrupt Enable bit
1 = Transaction interrupt enabled
0 = Transaction interrupt disabled

bit 2 **ACTVIE:** Bus Activity Detect Interrupt Enable bit
1 = Bus activity detect interrupt enabled
0 = Bus activity detect interrupt disabled

bit 1 **UERRIE:** USB Error Interrupt Enable bit
1 = USB error interrupt enabled
0 = USB error interrupt disabled

bit 0 **URSTIE:** USB Reset Interrupt Enable bit
1 = USB Reset interrupt enabled
0 = USB Reset interrupt disabled

REGISTER 26-9: UEIR: USB ERROR INTERRUPT STATUS REGISTER

R/C-0	U-0	U-0	R/C-0	R/C-0	R/C-0	R/C-0	R/C-0
BTSEF	—	—	BTOEF	DFN8EF	CRC16EF	CRC5EF	PIDEF
bit 7							bit 0

Legend:			
R = Readable bit	C = Clearable bit	U = Unimplemented bit, read as ‘0’	
-n = Value at POR	‘1’ = Bit is set	‘0’ = Bit is cleared	x = Bit is unknown

bit 7 **BTSEF:** Bit Stuff Error Flag bit
1 = A bit stuff error has been detected
0 = No bit stuff error

bit 6-5 **Unimplemented:** Read as ‘0’

bit 4 **BTOEF:** Bus Turnaround Time-out Error Flag bit
1 = Bus turnaround time-out has occurred (more than 16 bit times of Idle from previous EOP elapsed)
0 = No bus turnaround time-out

bit 3 **DFN8EF:** Data Field Size Error Flag bit
1 = The data field was not an integral number of bytes
0 = The data field was an integral number of bytes

bit 2 **CRC16EF:** CRC16 Failure Flag bit
1 = The CRC16 failed
0 = The CRC16 passed

bit 1 **CRC5EF:** CRC5 Host Error Flag bit
1 = The token packet was rejected due to a CRC5 error
0 = The token packet was accepted

bit 0 **PIDEF:** PID Check Failure Flag bit
1 = PID check failed
0 = PID check passed

 © 2012 Microchip Technology Inc.

REGISTER 26-10: UEIE: USB ERROR INTERRUPT ENABLE REGISTER

R/W-0	U-0	U-0	R/W-0	R/W-0	R/W-0	R/W-0	R/W-0
BTSEE	—	—	BTOEE	DFN8EE	CRC16EE	CRC5EE	PIDEE
bit 7							bit 0

Legend:			
R = Readable bit	W = Writable bit	U = Unimplemented bit, read as ‘0’	
-n = Value at POR	‘1’ = Bit is set	‘0’ = Bit is cleared	x = Bit is unknown

bit 7 **BTSEE:** Bit Stuff Error Interrupt Enable bit
1 = Bit stuff error interrupt enabled
0 = Bit stuff error interrupt disabled

bit 6-5 **Unimplemented:** Read as ‘0’

bit 4 **BTOEE:** Bus Turnaround Time-out Error Interrupt Enable bit
1 = Bus turnaround time-out error interrupt enabled
0 = Bus turnaround time-out error interrupt disabled

bit 3 **DFN8EE:** Data Field Size Error Interrupt Enable bit
1 = Data field size error interrupt enabled
0 = Data field size error interrupt disabled

bit 2 **CRC16EE:** CRC16 Failure Interrupt Enable bit
1 = CRC16 failure interrupt enabled
0 = CRC16 failure interrupt disabled

bit 1 **CRC5EE:** CRC5 Host Error Interrupt Enable bit
1 = CRC5 host error interrupt enabled
0 = CRC5 host error interrupt disabled

bit 0 **PIDEE:** PID Check Failure Interrupt Enable bit
1 = PID check failure interrupt enabled
0 = PID check failure interrupt disabled

TABLE 26-4: REGISTERS ASSOCIATED WITH USB MODULE OPERATION(1)

Name	Bit 7	Bit 6	Bit 5	Bit 4	Bit 3	Bit 2	Bit 1	Bit 0	Details on Page:
INTCON	GIE	PEIE	TMR0IE	INTE	IOCIE	TMR0IF	INTF	IOCIF	96
PIR2	OSFIF	C2IF	C1IF	—	BCL1IF	USBIF	ACTIF	—	100
PIE2	OSFIE	C2IE	C1IE	—	BCL1IE	USBIE	ACTIE	—	98
UCON	—	PPBRST	SE0	PKTDIS	USBEN	RESUME	SUSPND	—	326
UCFG	UTEYE	Reserved	—	UPUEN	Reserved	FSEN	PPB<1:0>		327
USTAT	—	ENDP<3:0>				DIR	PPBI	—	328
UADDR	—	ADDR6	ADDR5	ADDR4	ADDR3	ADDR2	ADDR1	ADDR0	312
UFRML	FRM7	FRM6	FRM5	FRM4	FRM3	FRM2	FRM1	FRM0	312*
UFRMH	—	—	—	—	—	FRM10	FRM9	FRM8	312*
UIR	—	SOFIF	STALLIF	IDLEIF	TRNIF	ACTVIF	UERRIF	URSTIF	332
UIE	—	SOFIE	STALLIE	IDLEIE	TRNIE	ACTVIE	UERRIE	URSTIE	333
UEIR	BTSEF	—	—	BTOEF	DFN8EF	CRC16EF	CRC5EF	PIDEF	334
UEIE	BTSEE	—	—	BTOEE	DFN8EE	CRC16EE	CRC5EE	PIDEE	335
UEP0	—	—	—	EPHSHK	EPCONDIS	EPOUTEN	EPINEN	EPSTALL	329
UEP1	—	—	—	EPHSHK	EPCONDIS	EPOUTEN	EPINEN	EPSTALL	329
UEP2	—	—	—	EPHSHK	EPCONDIS	EPOUTEN	EPINEN	EPSTALL	329
UEP3	—	—	—	EPHSHK	EPCONDIS	EPOUTEN	EPINEN	EPSTALL	329
UEP4	—	—	—	EPHSHK	EPCONDIS	EPOUTEN	EPINEN	EPSTALL	329
UEP5	—	—	—	EPHSHK	EPCONDIS	EPOUTEN	EPINEN	EPSTALL	329
UEP6	—	—	—	EPHSHK	EPCONDIS	EPOUTEN	EPINEN	EPSTALL	329
UEP7	—	—	—	EPHSHK	EPCONDIS	EPOUTEN	EPINEN	EPSTALL	329

Legend: — = unimplemented, read as '0'. Shaded cells are not used by the USB module.
* Page provides register information.

Note 1: This table includes only those hardware mapped SFRs located in Bank 15 of the data memory space. The Buffer Descriptor registers, which are mapped into Bank 4 and are not true SFRs, are listed separately in Table 26-3.

 © 2012 Microchip Technology Inc.

27.0 IN-CIRCUIT SERIAL PROGRAMMING™ (ICSP™)

ICSP™ programming allows customers to manufacture circuit boards with unprogrammed devices. Programming can be done after the assembly process allowing the device to be programmed with the most recent firmware or a custom firmware. Five pins are needed for ICSP programming:

- ICSPCLK
- ICSPDAT
- $\overline{\text{MCLR}}$/VPP
- VDD
- VSS

In Program/Verify mode the program memory, user IDs and the Configuration Words are programmed through serial communications. The ICSPDAT pin is a bidirectional I/O used for transferring the serial data and the ICSPCLK pin is the clock input. For more information on ICSP refer to the "*PIC16(L)F145X Memory Programming Specification*" (*DS41620*).

27.1 High-Voltage Programming Entry Mode

The device is placed into High-Voltage Programming Entry mode by holding the ICSPCLK and ICSPDAT pins low then raising the voltage on $\overline{\text{MCLR}}$/VPP to VIHH.

27.2 Low-Voltage Programming Entry Mode

The Low-Voltage Programming Entry mode allows the PIC® Flash MCUs to be programmed using VDD only, without high voltage. When the LVP bit of Configuration Words is set to '1', the low-voltage ICSP programming entry is enabled. To disable the Low-Voltage ICSP mode, the LVP bit must be programmed to '0'.

Entry into the Low-Voltage Programming Entry mode requires the following steps:

1. $\overline{\text{MCLR}}$ is brought to VIL.
2. A 32-bit key sequence is presented on ICSPDAT, while clocking ICSPCLK.

Once the key sequence is complete, $\overline{\text{MCLR}}$ must be held at VIL for as long as Program/Verify mode is to be maintained.

If low-voltage programming is enabled (LVP = 1), the $\overline{\text{MCLR}}$ Reset function is automatically enabled and cannot be disabled. See **Section 6.5 "MCLR"** for more information.

The LVP bit can only be reprogrammed to '0' by using the High-Voltage Programming mode.

27.3 Common Programming Interfaces

Connection to a target device is typically done through an ICSP header. A commonly found connector on development tools is the RJ-11 in the 6P6C (6-pin, 6 connector) configuration. See Figure 27-1.

FIGURE 27-1: ICD RJ-11 STYLE CONNECTOR INTERFACE

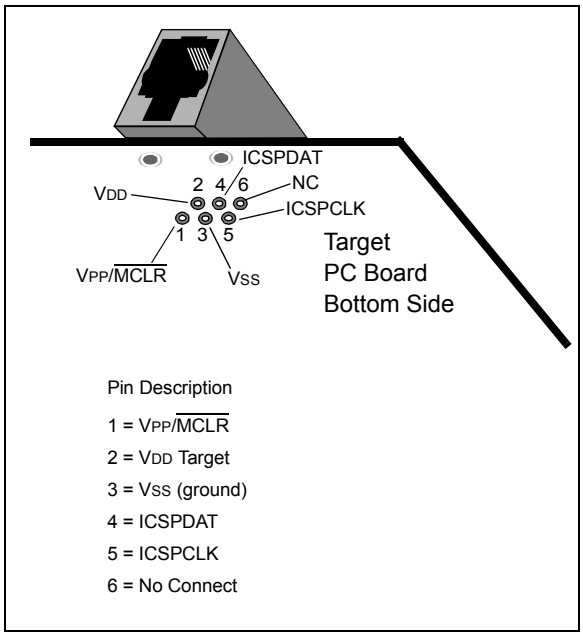

Another connector often found in use with the PICkit™ programmers is a standard 6-pin header with 0.1 inch spacing. Refer to Figure 27-2.

FIGURE 27-2: PICkit™ PROGRAMMER STYLE CONNECTOR INTERFACE

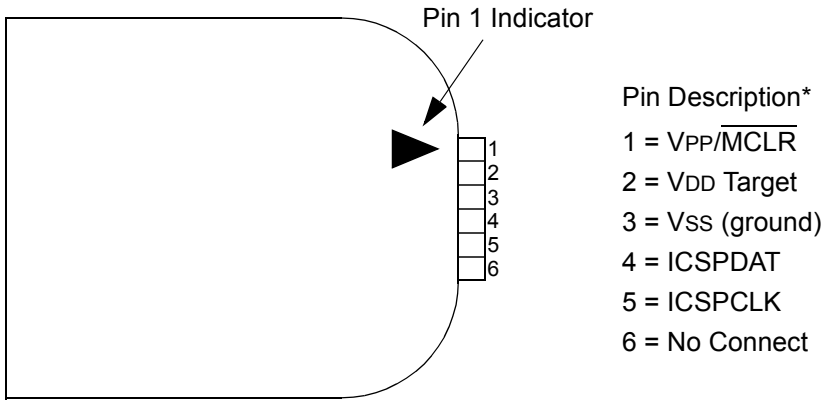

* The 6-pin header (0.100" spacing) accepts 0.025" square pins.

For additional interface recommendations, refer to your specific device programmer manual prior to PCB design.

It is recommended that isolation devices be used to separate the programming pins from other circuitry. The type of isolation is highly dependent on the specific application and may include devices such as resistors, diodes, or even jumpers. See Figure 27-3 for more information.

FIGURE 27-3: TYPICAL CONNECTION FOR ICSP™ PROGRAMMING

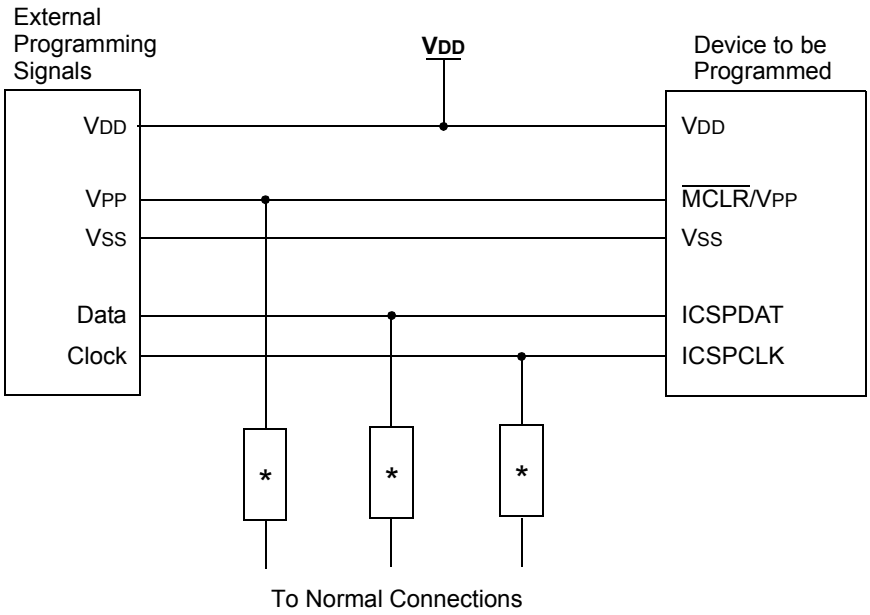

* Isolation devices (as required).

 © 2012 Microchip Technology Inc.

28.0 INSTRUCTION SET SUMMARY

Each PIC16 instruction is a 14-bit word containing the operation code (opcode) and all required operands. The op codes are broken into three broad categories.

- Byte Oriented
- Bit Oriented
- Literal and Control

The literal and control category contains the most varied instruction word format.

Table 28-3 lists the instructions recognized by the MPASM™ assembler.

All instructions are executed within a single instruction cycle, with the following exceptions, which may take two or three cycles:

- Subroutine takes two cycles (`CALL`, `CALLW`)
- Returns from interrupts or subroutines take two cycles (`RETURN`, `RETLW`, `RETFIE`)
- Program branching takes two cycles (`GOTO`, `BRA`, `BRW`, `BTFSS`, `BTFSC`, `DECFSZ`, `INCSFZ`)
- One additional instruction cycle will be used when any instruction references an indirect file register and the file select register is pointing to program memory.

One instruction cycle consists of 4 oscillator cycles; for an oscillator frequency of 4 MHz, this gives a nominal instruction execution rate of 1 MHz.

All instruction examples use the format '`0xhh`' to represent a hexadecimal number, where '`h`' signifies a hexadecimal digit.

28.1 Read-Modify-Write Operations

Any instruction that specifies a file register as part of the instruction performs a Read-Modify-Write (R-M-W) operation. The register is read, the data is modified, and the result is stored according to either the instruction, or the destination designator 'd'. A read operation is performed on a register even if the instruction writes to that register.

TABLE 28-1: OPCODE FIELD DESCRIPTIONS

Field	Description
f	Register file address (0x00 to 0x7F)
W	Working register (accumulator)
b	Bit address within an 8-bit file register
k	Literal field, constant data or label
x	Don't care location (= `0` or `1`). The assembler will generate code with x = `0`. It is the recommended form of use for compatibility with all Microchip software tools.
d	Destination select; d = `0`: store result in W, d = `1`: store result in file register f. Default is d = `1`.
n	FSR or INDF number. (0-1)
mm	Pre-post increment-decrement mode selection

TABLE 28-2: ABBREVIATION DESCRIPTIONS

Field	Description
PC	Program Counter
$\overline{TO}$	Time-out bit
C	Carry bit
DC	Digit carry bit
Z	Zero bit
$\overline{PD}$	Power-down bit

FIGURE 28-1: GENERAL FORMAT FOR INSTRUCTIONS

Byte-oriented file register operations

13 – 8	7	6 – 0
OPCODE	d	f (FILE #)

d = 0 for destination W
d = 1 for destination f
f = 7-bit file register address

Bit-oriented file register operations

13 – 10	9 – 7	6 – 0
OPCODE	b (BIT #)	f (FILE #)

b = 3-bit bit address
f = 7-bit file register address

Literal and control operations

General

13 – 8	7 – 0
OPCODE	k (literal)

k = 8-bit immediate value

CALL and GOTO instructions only

13 – 11	10 – 0
OPCODE	k (literal)

k = 11-bit immediate value

MOVLP instruction only

13 – 7	6 – 0
OPCODE	k (literal)

k = 7-bit immediate value

MOVLB instruction only

13 – 5	4 – 0
OPCODE	k (literal)

k = 5-bit immediate value

BRA instruction only

13 – 9	8 – 0
OPCODE	k (literal)

k = 9-bit immediate value

FSR Offset instructions

13 – 7	6	5 – 0
OPCODE	n	k (literal)

n = appropriate FSR
k = 6-bit immediate value

FSR Increment instructions

13 – 3	2	1 – 0
OPCODE	n	m (mode)

n = appropriate FSR
m = 2-bit mode value

OPCODE only

13 – 0
OPCODE

 © 2012 Microchip Technology Inc.

TABLE 28-3: PIC16(L)F1454/5/9 ENHANCED INSTRUCTION SET

Mnemonic, Operands		Description	Cycles	14-Bit Opcode MSb			LSb	Status Affected	Notes
BYTE-ORIENTED FILE REGISTER OPERATIONS									
ADDWF	f, d	Add W and f	1	00	0111	dfff	ffff	C, DC, Z	**2**
ADDWFC	f, d	Add with Carry W and f	1	11	1101	dfff	ffff	C, DC, Z	**2**
ANDWF	f, d	AND W with f	1	00	0101	dfff	ffff	Z	**2**
ASRF	f, d	Arithmetic Right Shift	1	11	0111	dfff	ffff	C, Z	**2**
LSLF	f, d	Logical Left Shift	1	11	0101	dfff	ffff	C, Z	**2**
LSRF	f, d	Logical Right Shift	1	11	0110	dfff	ffff	C, Z	**2**
CLRF	f	Clear f	1	00	0001	1fff	ffff	Z	**2**
CLRW	–	Clear W	1	00	0001	0000	00xx	Z	
COMF	f, d	Complement f	1	00	1001	dfff	ffff	Z	**2**
DECF	f, d	Decrement f	1	00	0011	dfff	ffff	Z	**2**
INCF	f, d	Increment f	1	00	1010	dfff	ffff	Z	**2**
IORWF	f, d	Inclusive OR W with f	1	00	0100	dfff	ffff	Z	**2**
MOVF	f, d	Move f	1	00	1000	dfff	ffff	Z	**2**
MOVWF	f	Move W to f	1	00	0000	1fff	ffff		**2**
RLF	f, d	Rotate Left f through Carry	1	00	1101	dfff	ffff	C	**2**
RRF	f, d	Rotate Right f through Carry	1	00	1100	dfff	ffff	C	**2**
SUBWF	f, d	Subtract W from f	1	00	0010	dfff	ffff	C, DC, Z	**2**
SUBWFB	f, d	Subtract with Borrow W from f	1	11	1011	dfff	ffff	C, DC, Z	**2**
SWAPF	f, d	Swap nibbles in f	1	00	1110	dfff	ffff		**2**
XORWF	f, d	Exclusive OR W with f	1	00	0110	dfff	ffff	Z	**2**
BYTE ORIENTED SKIP OPERATIONS									
DECFSZ	f, d	Decrement f, Skip if 0	1(2)	00	1011	dfff	ffff		**1, 2**
INCFSZ	f, d	Increment f, Skip if 0	1(2)	00	1111	dfff	ffff		**1, 2**
BIT-ORIENTED FILE REGISTER OPERATIONS									
BCF	f, b	Bit Clear f	1	01	00bb	bfff	ffff		**2**
BSF	f, b	Bit Set f	1	01	01bb	bfff	ffff		**2**
BIT-ORIENTED SKIP OPERATIONS									
BTFSC	f, b	Bit Test f, Skip if Clear	1 (2)	01	10bb	bfff	ffff		**1, 2**
BTFSS	f, b	Bit Test f, Skip if Set	1 (2)	01	11bb	bfff	ffff		**1, 2**
LITERAL OPERATIONS									
ADDLW	k	Add literal and W	1	11	1110	kkkk	kkkk	C, DC, Z	
ANDLW	k	AND literal with W	1	11	1001	kkkk	kkkk	Z	
IORLW	k	Inclusive OR literal with W	1	11	1000	kkkk	kkkk	Z	
MOVLB	k	Move literal to BSR	1	00	0000	001k	kkkk		
MOVLP	k	Move literal to PCLATH	1	11	0001	1kkk	kkkk		
MOVLW	k	Move literal to W	1	11	0000	kkkk	kkkk		
SUBLW	k	Subtract W from literal	1	11	1100	kkkk	kkkk	C, DC, Z	
XORLW	k	Exclusive OR literal with W	1	11	1010	kkkk	kkkk	Z	

Note 1: If the Program Counter (PC) is modified, or a conditional test is true, the instruction requires two cycles. The second cycle is executed as a NOP.

2: If this instruction addresses an INDF register and the MSb of the corresponding FSR is set, this instruction will require one additional instruction cycle.

TABLE 28-3: PIC16(L)F1454/5/9 ENHANCED INSTRUCTION SET (CONTINUED)

Mnemonic, Operands		Description	Cycles	14-Bit Opcode MSb			LSb	Status Affected	Notes
CONTROL OPERATIONS									
BRA	k	Relative Branch	2	11	001k	kkkk	kkkk		
BRW	–	Relative Branch with W	2	00	0000	0000	1011		
CALL	k	Call Subroutine	2	10	0kkk	kkkk	kkkk		
CALLW	–	Call Subroutine with W	2	00	0000	0000	1010		
GOTO	k	Go to address	2	10	1kkk	kkkk	kkkk		
RETFIE	k	Return from interrupt	2	00	0000	0000	1001		
RETLW	k	Return with literal in W	2	11	0100	kkkk	kkkk		
RETURN	–	Return from Subroutine	2	00	0000	0000	1000		
INHERENT OPERATIONS									
CLRWDT	–	Clear Watchdog Timer	1	00	0000	0110	0100	$\overline{TO}$, $\overline{PD}$	
NOP	–	No Operation	1	00	0000	0000	0000		
OPTION	–	Load OPTION_REG register with W	1	00	0000	0110	0010		
RESET	–	Software device Reset	1	00	0000	0000	0001		
SLEEP	–	Go into Standby mode	1	00	0000	0110	0011	$\overline{TO}$, $\overline{PD}$	
TRIS	f	Load TRIS register with W	1	00	0000	0110	0fff		
C-COMPILER OPTIMIZED									
ADDFSR	n, k	Add Literal k to FSRn	1	11	0001	0nkk	kkkk		
MOVIW	n mm	Move Indirect FSRn to W with pre/post inc/dec modifier, mm	1	00	0000	0001	0nmm kkkk	Z	**2, 3**
	k[n]	Move INDFn to W, Indexed Indirect.	1	11	1111	0nkk	1nmm	Z	**2**
MOVWI	n mm	Move W to Indirect FSRn with pre/post inc/dec modifier, mm	1	00	0000	0001	kkkk		**2, 3**
	k[n]	Move W to INDFn, Indexed Indirect.	1	11	1111	1nkk			**2**

Note 1: If the Program Counter (PC) is modified, or a conditional test is true, the instruction requires two cycles. The second cycle is executed as a NOP.

2: If this instruction addresses an INDF register and the MSb of the corresponding FSR is set, this instruction will require one additional instruction cycle.

3: See Table in the MOVIW and MOVWI instruction descriptions.

 © 2012 Microchip Technology Inc.

28.2 Instruction Descriptions

ADDFSR — Add Literal to FSRn

Syntax:	[*label*] ADDFSR FSRn, k
Operands:	$-32 \le k \le 31$ $n \in [0, 1]$
Operation:	FSR(n) + k → FSR(n)
Status Affected:	None
Description:	The signed 6-bit literal ‘k’ is added to the contents of the FSRnH:FSRnL register pair. FSRn is limited to the range 0000h - FFFFh. Moving beyond these bounds will cause the FSR to wrap around.

ADDLW — Add literal and W

Syntax:	[*label*] ADDLW k
Operands:	$0 \le k \le 255$
Operation:	(W) + k → (W)
Status Affected:	C, DC, Z
Description:	The contents of the W register are added to the eight-bit literal ‘k’ and the result is placed in the W register.

ADDWF — Add W and f

Syntax:	[*label*] ADDWF f,d
Operands:	$0 \le f \le 127$ $d \in [0,1]$
Operation:	(W) + (f) → (destination)
Status Affected:	C, DC, Z
Description:	Add the contents of the W register with register ‘f’. If ‘d’ is ‘0’, the result is stored in the W register. If ‘d’ is ‘1’, the result is stored back in register ‘f’.

ADDWFC — ADD W and CARRY bit to f

Syntax:	[*label*] ADDWFC f {,d}
Operands:	$0 \le f \le 127$ $d \in [0,1]$
Operation:	(W) + (f) + (C) → dest
Status Affected:	C, DC, Z
Description:	Add W, the Carry flag and data memory location ‘f’. If ‘d’ is ‘0’, the result is placed in W. If ‘d’ is ‘1’, the result is placed in data memory location ‘f’.

ANDLW — AND literal with W

Syntax:	[*label*] ANDLW k
Operands:	$0 \le k \le 255$
Operation:	(W) .AND. (k) → (W)
Status Affected:	Z
Description:	The contents of W register are AND’ed with the eight-bit literal ‘k’. The result is placed in the W register.

ANDWF — AND W with f

Syntax:	[*label*] ANDWF f,d
Operands:	$0 \le f \le 127$ $d \in [0,1]$
Operation:	(W) .AND. (f) → (destination)
Status Affected:	Z
Description:	AND the W register with register ‘f’. If ‘d’ is ‘0’, the result is stored in the W register. If ‘d’ is ‘1’, the result is stored back in register ‘f’.

ASRF — Arithmetic Right Shift

Syntax:	[*label*] ASRF f {,d}
Operands:	$0 \le f \le 127$ $d \in [0,1]$
Operation:	(f<7>)→ dest<7> (f<7:1>) → dest<6:0>, (f<0>) → C,
Status Affected:	C, Z
Description:	The contents of register ‘f’ are shifted one bit to the right through the Carry flag. The MSb remains unchanged. If ‘d’ is ‘0’, the result is placed in W. If ‘d’ is ‘1’, the result is stored back in register ‘f’.

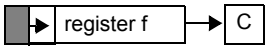

BCF	Bit Clear f
Syntax:	[*label*] BCF f,b
Operands:	$0 \le f \le 127$ $0 \le b \le 7$
Operation:	0 → (f<b>)
Status Affected:	None
Description:	Bit 'b' in register 'f' is cleared.

BRA	Relative Branch
Syntax:	[*label*] BRA label [*label*] BRA $+k
Operands:	$-256 \le$ label - PC + 1 ≤ 255 $-256 \le k \le 255$
Operation:	(PC) + 1 + k → PC
Status Affected:	None
Description:	Add the signed 9-bit literal 'k' to the PC. Since the PC will have incremented to fetch the next instruction, the new address will be PC + 1 + k. This instruction is a two-cycle instruction. This branch has a limited range.

BRW	Relative Branch with W
Syntax:	[*label*] BRW
Operands:	None
Operation:	(PC) + (W) → PC
Status Affected:	None
Description:	Add the contents of W (unsigned) to the PC. Since the PC will have incremented to fetch the next instruction, the new address will be PC + 1 + (W). This instruction is a two-cycle instruction.

BSF	Bit Set f
Syntax:	[*label*] BSF f,b
Operands:	$0 \le f \le 127$ $0 \le b \le 7$
Operation:	1 → (f<b>)
Status Affected:	None
Description:	Bit 'b' in register 'f' is set.

BTFSC	Bit Test f, Skip if Clear
Syntax:	[*label*] BTFSC f,b
Operands:	$0 \le f \le 127$ $0 \le b \le 7$
Operation:	skip if (f<b>) = 0
Status Affected:	None
Description:	If bit 'b' in register 'f' is '1', the next instruction is executed. If bit 'b', in register 'f', is '0', the next instruction is discarded, and a NOP is executed instead, making this a 2-cycle instruction.

BTFSS	Bit Test f, Skip if Set
Syntax:	[*label*] BTFSS f,b
Operands:	$0 \le f \le 127$ $0 \le b < 7$
Operation:	skip if (f<b>) = 1
Status Affected:	None
Description:	If bit 'b' in register 'f' is '0', the next instruction is executed. If bit 'b' is '1', then the next instruction is discarded and a NOP is executed instead, making this a 2-cycle instruction.

 © 2012 Microchip Technology Inc.

CALL	Call Subroutine
Syntax:	[*label*] CALL k
Operands:	$0 \le k \le 2047$
Operation:	(PC)+ 1→ TOS, k → PC<10:0>, (PCLATH<4:3>) → PC<12:11>
Status Affected:	None
Description:	Call Subroutine. First, return address (PC + 1) is pushed onto the stack. The eleven-bit immediate address is loaded into PC bits <10:0>. The upper bits of the PC are loaded from PCLATH. `CALL` is a two-cycle instruction.

CALLW	Subroutine Call With W
Syntax:	[*label*] CALLW
Operands:	None
Operation:	(PC) +1 → TOS, (W) → PC<7:0>, (PCLATH<6:0>) → PC<14:8>
Status Affected:	None
Description:	Subroutine call with W. First, the return address (PC + 1) is pushed onto the return stack. Then, the contents of W is loaded into PC<7:0>, and the contents of PCLATH into PC<14:8>. `CALLW` is a two-cycle instruction.

CLRF	Clear f
Syntax:	[*label*] CLRF f
Operands:	$0 \le f \le 127$
Operation:	00h → (f) `1` → Z
Status Affected:	Z
Description:	The contents of register ‘f’ are cleared and the Z bit is set.

CLRW	Clear W
Syntax:	[*label*] CLRW
Operands:	None
Operation:	00h → (W) `1` → Z
Status Affected:	Z
Description:	W register is cleared. Zero bit (Z) is set.

CLRWDT	Clear Watchdog Timer
Syntax:	[*label*] CLRWDT
Operands:	None
Operation:	00h → WDT `0` → WDT prescaler, `1` → $\overline{TO}$ `1` → $\overline{PD}$
Status Affected:	$\overline{TO}$, $\overline{PD}$
Description:	`CLRWDT` instruction resets the Watchdog Timer. It also resets the prescaler of the WDT. Status bits $\overline{TO}$ and $\overline{PD}$ are set.

COMF	Complement f
Syntax:	[*label*] COMF f,d
Operands:	$0 \le f \le 127$ $d \in [0,1]$
Operation:	$(\bar{f}) \rightarrow$ (destination)
Status Affected:	Z
Description:	The contents of register ‘f’ are complemented. If ‘d’ is ‘`0`’, the result is stored in W. If ‘d’ is ‘`1`’, the result is stored back in register ‘f’.

DECF	Decrement f
Syntax:	[*label*] DECF f,d
Operands:	$0 \le f \le 127$ $d \in [0,1]$
Operation:	(f) - 1 → (destination)
Status Affected:	Z
Description:	Decrement register ‘f’. If ‘d’ is ‘`0`’, the result is stored in the W register. If ‘d’ is ‘`1`’, the result is stored back in register ‘f’.

DECFSZ — Decrement f, Skip if 0

Syntax:	[*label*] DECFSZ f,d
Operands:	$0 \le f \le 127$ $d \in [0,1]$
Operation:	(f) - 1 → (destination); skip if result = 0
Status Affected:	None
Description:	The contents of register 'f' are decremented. If 'd' is '0', the result is placed in the W register. If 'd' is '1', the result is placed back in register 'f'. If the result is '1', the next instruction is executed. If the result is '0', then a NOP is executed instead, making it a 2-cycle instruction.

GOTO — Unconditional Branch

Syntax:	[*label*] GOTO k
Operands:	$0 \le k \le 2047$
Operation:	k → PC<10:0> PCLATH<4:3> → PC<12:11>
Status Affected:	None
Description:	GOTO is an unconditional branch. The eleven-bit immediate value is loaded into PC bits <10:0>. The upper bits of PC are loaded from PCLATH<4:3>. GOTO is a two-cycle instruction.

INCF — Increment f

Syntax:	[*label*] INCF f,d
Operands:	$0 \le f \le 127$ $d \in [0,1]$
Operation:	(f) + 1 → (destination)
Status Affected:	Z
Description:	The contents of register 'f' are incremented. If 'd' is '0', the result is placed in the W register. If 'd' is '1', the result is placed back in register 'f'.

INCFSZ — Increment f, Skip if 0

Syntax:	[*label*] INCFSZ f,d
Operands:	$0 \le f \le 127$ $d \in [0,1]$
Operation:	(f) + 1 → (destination), skip if result = 0
Status Affected:	None
Description:	The contents of register 'f' are incremented. If 'd' is '0', the result is placed in the W register. If 'd' is '1', the result is placed back in register 'f'. If the result is '1', the next instruction is executed. If the result is '0', a NOP is executed instead, making it a 2-cycle instruction.

IORLW — Inclusive OR literal with W

Syntax:	[*label*] IORLW k
Operands:	$0 \le k \le 255$
Operation:	(W) .OR. k → (W)
Status Affected:	Z
Description:	The contents of the W register are OR'ed with the eight-bit literal 'k'. The result is placed in the W register.

IORWF — Inclusive OR W with f

Syntax:	[*label*] IORWF f,d
Operands:	$0 \le f \le 127$ $d \in [0,1]$
Operation:	(W) .OR. (f) → (destination)
Status Affected:	Z
Description:	Inclusive OR the W register with register 'f'. If 'd' is '0', the result is placed in the W register. If 'd' is '1', the result is placed back in register 'f'.

 © 2012 Microchip Technology Inc.

LSLF	**Logical Left Shift**
Syntax:	[*label*] LSLF f {,d}
Operands:	$0 \le f \le 127$ $d \in [0,1]$
Operation:	(f<7>) → C (f<6:0>) → dest<7:1> 0 → dest<0>
Status Affected:	C, Z
Description:	The contents of register 'f' are shifted one bit to the left through the Carry flag. A '0' is shifted into the LSb. If 'd' is '0', the result is placed in W. If 'd' is '1', the result is stored back in register 'f'.

LSRF	**Logical Right Shift**
Syntax:	[*label*] LSRF f {,d}
Operands:	$0 \le f \le 127$ $d \in [0,1]$
Operation:	0 → dest<7> (f<7:1>) → dest<6:0>, (f<0>) → C,
Status Affected:	C, Z
Description:	The contents of register 'f' are shifted one bit to the right through the Carry flag. A '0' is shifted into the MSb. If 'd' is '0', the result is placed in W. If 'd' is '1', the result is stored back in register 'f'.

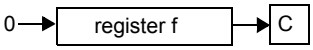

MOVF	**Move f**
Syntax:	[*label*] MOVF f,d
Operands:	$0 \le f \le 127$ $d \in [0,1]$
Operation:	(f) → (dest)
Status Affected:	Z
Description:	The contents of register f is moved to a destination dependent upon the status of d. If d = 0, destination is W register. If d = 1, the destination is file register f itself. d = 1 is useful to test a file register since status flag Z is affected.
Words:	1
Cycles:	1
Example:	`MOVF FSR, 0` After Instruction W = value in FSR register Z = 1

MOVIW — Move INDFn to W

Syntax: [*label*] MOVIW ++FSRn
[*label*] MOVIW --FSRn
[*label*] MOVIW FSRn++
[*label*] MOVIW FSRn--
[*label*] MOVIW k[FSRn]

Operands: n ∈ [0,1]
mm ∈ [00,01, 10, 11]
-32 ≤ k ≤ 31

Operation: INDFn → W
Effective address is determined by
- FSR + 1 (preincrement)
- FSR - 1 (predecrement)
- FSR + k (relative offset)

After the Move, the FSR value will be either:
- FSR + 1 (all increments)
- FSR - 1 (all decrements)
- Unchanged

Status Affected: Z

Mode	Syntax	mm
Preincrement	++FSRn	00
Predecrement	--FSRn	01
Postincrement	FSRn++	10
Postdecrement	FSRn--	11

Description: This instruction is used to move data between W and one of the indirect registers (INDFn). Before/after this move, the pointer (FSRn) is updated by pre/post incrementing/decrementing it.

Note: The INDFn registers are not physical registers. Any instruction that accesses an INDFn register actually accesses the register at the address specified by the FSRn.

FSRn is limited to the range 0000h - FFFFh. Incrementing/decrementing it beyond these bounds will cause it to wrap-around.

MOVLB — Move literal to BSR

Syntax: [*label*] MOVLB k

Operands: 0 ≤ k ≤ 15

Operation: k → BSR

Status Affected: None

Description: The five-bit literal ‘k’ is loaded into the Bank Select Register (BSR).

MOVLP — Move literal to PCLATH

Syntax: [*label*] MOVLP k

Operands: 0 ≤ k ≤ 127

Operation: k → PCLATH

Status Affected: None

Description: The seven-bit literal ‘k’ is loaded into the PCLATH register.

MOVLW — Move literal to W

Syntax: [*label*] MOVLW k

Operands: 0 ≤ k ≤ 255

Operation: k → (W)

Status Affected: None

Description: The eight-bit literal ‘k’ is loaded into W register. The “don’t cares” will assemble as ‘0’s.

Words: 1

Cycles: 1

Example:

```
MOVLW    0x5A
```

After Instruction
W = 0x5A

MOVWF — Move W to f

Syntax: [*label*] MOVWF f

Operands: 0 ≤ f ≤ 127

Operation: (W) → (f)

Status Affected: None

Description: Move data from W register to register ‘f’.

Words: 1

Cycles: 1

Example:

```
MOVWF    OPTION_REG
```

Before Instruction
OPTION_REG = 0xFF
W = 0x4F
After Instruction
OPTION_REG = 0x4F
W = 0x4F

 © 2012 Microchip Technology Inc.

MOVWI — Move W to INDFn

Syntax: [*label*] MOVWI ++FSRn
[*label*] MOVWI --FSRn
[*label*] MOVWI FSRn++
[*label*] MOVWI FSRn--
[*label*] MOVWI k[FSRn]

Operands: n ∈ [0,1]
mm ∈ [00,01, 10, 11]
-32 ≤ k ≤ 31

Operation: W → INDFn
Effective address is determined by
- FSR + 1 (preincrement)
- FSR - 1 (predecrement)
- FSR + k (relative offset)

After the Move, the FSR value will be either:
- FSR + 1 (all increments)
- FSR - 1 (all decrements)

Unchanged

Status Affected: None

Mode	Syntax	mm
Preincrement	++FSRn	00
Predecrement	--FSRn	01
Postincrement	FSRn++	10
Postdecrement	FSRn--	11

Description: This instruction is used to move data between W and one of the indirect registers (INDFn). Before/after this move, the pointer (FSRn) is updated by pre/post incrementing/decrementing it.

Note: The INDFn registers are not physical registers. Any instruction that accesses an INDFn register actually accesses the register at the address specified by the FSRn.

FSRn is limited to the range 0000h - FFFFh. Incrementing/decrementing it beyond these bounds will cause it to wrap-around.

The increment/decrement operation on FSRn WILL NOT affect any Status bits.

NOP — No Operation

Syntax: [*label*] NOP

Operands: None

Operation: No operation

Status Affected: None

Description: No operation.

Words: 1

Cycles: 1

Example:

```
NOP
```

OPTION — Load OPTION_REG Register with W

Syntax: [*label*] OPTION

Operands: None

Operation: (W) → OPTION_REG

Status Affected: None

Description: Move data from W register to OPTION_REG register.

RESET — Software Reset

Syntax: [*label*] RESET

Operands: None

Operation: Execute a device Reset. Resets the nRI flag of the PCON register.

Status Affected: None

Description: This instruction provides a way to execute a hardware Reset by software.

RETFIE	Return from Interrupt
Syntax:	[*label*] RETFIE
Operands:	None
Operation:	TOS → PC, 1 → GIE
Status Affected:	None
Description:	Return from Interrupt. Stack is POPed and Top-of-Stack (TOS) is loaded in the PC. Interrupts are enabled by setting Global Interrupt Enable bit, GIE (INTCON<7>). This is a two-cycle instruction.
Words:	1
Cycles:	2
Example:	`RETFIE` After Interrupt PC = TOS GIE = 1

RETURN	Return from Subroutine
Syntax:	[*label*] RETURN
Operands:	None
Operation:	TOS → PC
Status Affected:	None
Description:	Return from subroutine. The stack is POPed and the top of the stack (TOS) is loaded into the program counter. This is a two-cycle instruction.

RETLW	Return with literal in W
Syntax:	[*label*] RETLW k
Operands:	$0 \le k \le 255$
Operation:	k → (W); TOS → PC
Status Affected:	None
Description:	The W register is loaded with the eight bit literal ‘k’. The program counter is loaded from the top of the stack (the return address). This is a two-cycle instruction.
Words:	1
Cycles:	2

Example:	`CALL TABLE;W contains table`
	`;offset value`
	`• ;W now has table value`
	`TABLE •`
	`•`
	`ADDWF PC ;W = offset`
	`RETLW k1 ;Begin table`
	`RETLW k2 ;`
	`•`
	`•`
	`•`
	`RETLW kn ; End of table`
	
	Before Instruction
	W = 0x07
	After Instruction
	W = value of k8

RLF	Rotate Left f through Carry
Syntax:	[*label*] RLF f,d
Operands:	$0 \le f \le 127$ $d \in [0,1]$
Operation:	See description below
Status Affected:	C
Description:	The contents of register ‘f’ are rotated one bit to the left through the Carry flag. If ‘d’ is ‘0’, the result is placed in the W register. If ‘d’ is ‘1’, the result is stored back in register ‘f’. 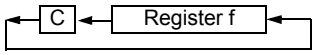
Words:	1
Cycles:	1
Example:	`RLF REG1,0` Before Instruction REG1 = 1110 0110 C = 0 After Instruction REG1 = 1110 0110 W = 1100 1100 C = 1

 © 2012 Microchip Technology Inc.

RRF — Rotate Right f through Carry

Syntax:	[*label*] RRF f,d
Operands:	$0 \le f \le 127$ $d \in [0,1]$
Operation:	See description below
Status Affected:	C
Description:	The contents of register 'f' are rotated one bit to the right through the Carry flag. If 'd' is '0', the result is placed in the W register. If 'd' is '1', the result is placed back in register 'f'.

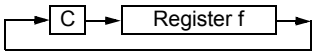

SLEEP — Enter Sleep mode

Syntax:	[*label*] SLEEP
Operands:	None
Operation:	00h → WDT, 0 → WDT prescaler, 1 → $\overline{TO}$, 0 → $\overline{PD}$
Status Affected:	$\overline{TO}$, $\overline{PD}$
Description:	The power-down Status bit, $\overline{PD}$ is cleared. Time-out Status bit, $\overline{TO}$ is set. Watchdog Timer and its prescaler are cleared. The processor is put into Sleep mode with the oscillator stopped.

SUBLW — Subtract W from literal

Syntax:	[*label*] SUBLW k
Operands:	$0 \le k \le 255$
Operation:	k - (W) → (W)
Status Affected:	C, DC, Z
Description:	The W register is subtracted (2's complement method) from the eight-bit literal 'k'. The result is placed in the W register.

C = 0	W > k
C = 1	W ≤ k
DC = 0	W<3:0> > k<3:0>
DC = 1	W<3:0> ≤ k<3:0>

SUBWF — Subtract W from f

Syntax:	[*label*] SUBWF f,d
Operands:	$0 \le f \le 127$ $d \in [0,1]$
Operation:	(f) - (W) → (destination)
Status Affected:	C, DC, Z
Description:	Subtract (2's complement method) W register from register 'f'. If 'd' is '0', the result is stored in the W register. If 'd' is '1', the result is stored back in register 'f.

C = 0	W > f
C = 1	W ≤ f
DC = 0	W<3:0> > f<3:0>
DC = 1	W<3:0> ≤ f<3:0>

SUBWFB — Subtract W from f with Borrow

Syntax:	SUBWFB f {,d}
Operands:	$0 \le f \le 127$ $d \in [0,1]$
Operation:	(f) – (W) – ($\overline{B}$) → dest
Status Affected:	C, DC, Z
Description:	Subtract W and the BORROW flag (CARRY) from register 'f' (2's complement method). If 'd' is '0', the result is stored in W. If 'd' is '1', the result is stored back in register 'f'.

SWAPF	Swap Nibbles in f
Syntax:	[*label*] SWAPF f,d
Operands:	$0 \le f \le 127$ $d \in [0,1]$
Operation:	(f<3:0>) → (destination<7:4>), (f<7:4>) → (destination<3:0>)
Status Affected:	None
Description:	The upper and lower nibbles of register 'f' are exchanged. If 'd' is '0', the result is placed in the W register. If 'd' is '1', the result is placed in register 'f'.

TRIS	Load TRIS Register with W
Syntax:	[*label*] TRIS f
Operands:	$5 \le f \le 7$
Operation:	(W) → TRIS register 'f'
Status Affected:	None
Description:	Move data from W register to TRIS register. When 'f' = 5, TRISA is loaded. When 'f' = 6, TRISB is loaded. When 'f' = 7, TRISC is loaded.

XORLW	Exclusive OR literal with W
Syntax:	[*label*] XORLW k
Operands:	$0 \le k \le 255$
Operation:	(W) .XOR. k → (W)
Status Affected:	Z
Description:	The contents of the W register are XOR'ed with the eight-bit literal 'k'. The result is placed in the W register.

XORWF	Exclusive OR W with f
Syntax:	[*label*] XORWF f,d
Operands:	$0 \le f \le 127$ $d \in [0,1]$
Operation:	(W) .XOR. (f) → (destination)
Status Affected:	Z
Description:	Exclusive OR the contents of the W register with register 'f'. If 'd' is '0', the result is stored in the W register. If 'd' is '1', the result is stored back in register 'f'.

 © 2012 Microchip Technology Inc.

29.0 ELECTRICAL SPECIFICATIONS

Absolute Maximum Ratings(†)

Ambient temperature under bias ..... -40°C to +125°C
Storage temperature ..... -65°C to +150°C
Voltage on V_{DD} with respect to V_{SS}, PIC16LF1454/5/9 ..... -0.3V to +6.5V
Voltage on V_{DD} with respect to V_{SS}, PIC16LF1454/5/9 ..... -0.3V to +4.0V
Voltage on $\overline{MCLR}$ with respect to Vss ..... -0.3V to +9.0V
Voltage on all other pins with respect to V_{SS} ..... -0.3V to (V_{DD} + 0.3V)
Total power dissipation(1) ..... 800 mW
Maximum current out of V_{SS} pin, -40°C ≤ T_A ≤ +85°C for industrial ..... 396 mA
Maximum current out of V_{SS} pin, -40°C ≤ T_A ≤ +125°C for extended ..... 114 mA
Maximum current into V_{DD} pin, -40°C ≤ T_A ≤ +85°C for industrial ..... 292 mA
Maximum current into V_{DD} pin, -40°C ≤ T_A ≤ +125°C for extended ..... 107 mA
Clamp current, I_K (V_{PIN} < 0 or V_{PIN} > V_{DD}) ..... ± 20 mA
Maximum output current sunk by any I/O pin ..... 25 mA
Maximum output current sourced by any I/O pin ..... 25 mA

Note 1: Power dissipation is calculated as follows: $P_{DIS} = V_{DD} \times \{I_{DD} - \sum I_{OH}\} + \sum \{(V_{DD} - V_{OH}) \times I_{OH}\} + \sum(V_{OI} \times I_{OL})$.

† NOTICE: Stresses above those listed under “Absolute Maximum Ratings” may cause permanent damage to the device. This is a stress rating only and functional operation of the device at those or any other conditions above those indicated in the operation listings of this specification is not implied. Exposure above maximum rating conditions for extended periods may affect device reliability.

PRELIMINARY

FIGURE 29-1: PIC16F1454/5/9 VOLTAGE FREQUENCY GRAPH, -40°C ≤ TA ≤ +125°C

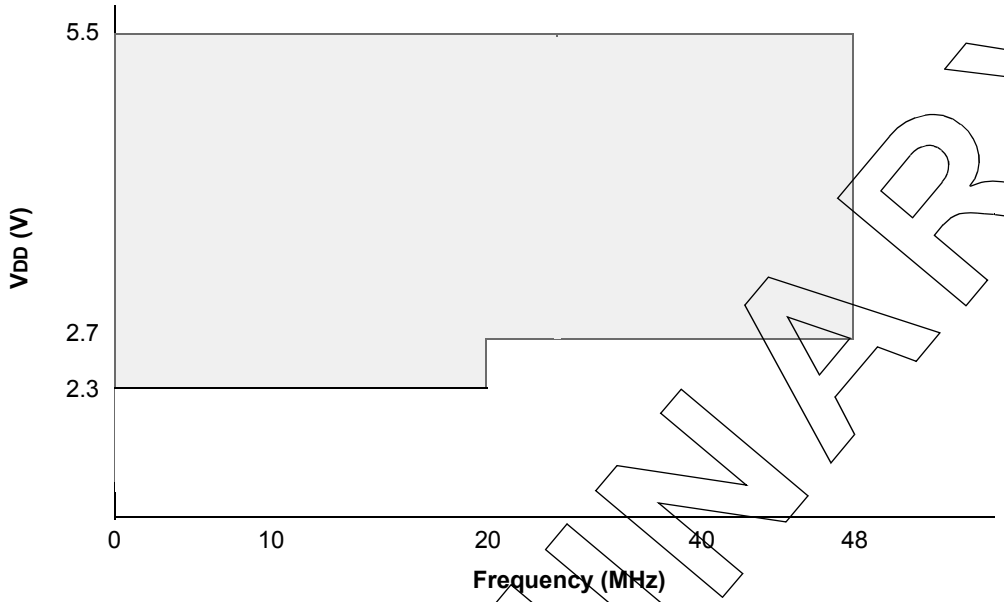

Note 1: The shaded region indicates the permissible combinations of voltage and frequency.
2: Refer to Table 29-1 for each Oscillator mode's supported frequencies.

FIGURE 29-2: PIC16LF1454/5/9 VOLTAGE FREQUENCY GRAPH, -40°C ≤ TA ≤ +125°C

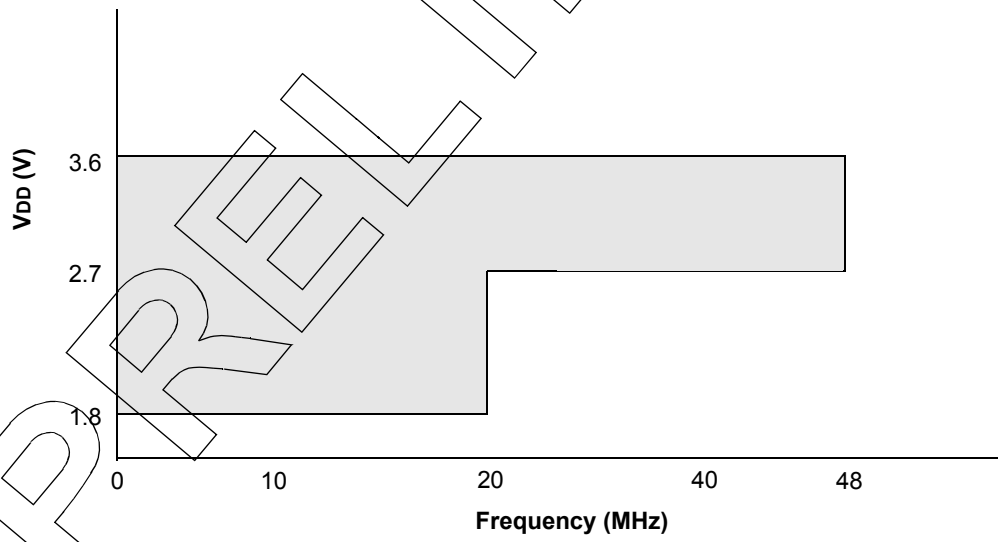

Note 1: The shaded region indicates the permissible combinations of voltage and frequency.
2: Refer to Table 29-1 for each Oscillator mode's supported frequencies.

PRELIMINARY

 © 2012 Microchip Technology Inc.

29.1 DC Characteristics: PIC16(L)F1454/5/9-I/E (Industrial, Extended)

PIC16LF1454/5/9			Standard Operating Conditions (unless otherwise stated) Operating temperature -40°C ≤ TA ≤ +85°C for industrial -40°C ≤ TA ≤ +125°C for extended				
PIC16F1454/5/9			**Standard Operating Conditions (unless otherwise stated)** Operating temperature -40°C ≤ TA ≤ +85°C for industrial -40°C ≤ TA ≤ +125°C for extended				
Param. No.	**Sym.**	**Characteristic**	**Min.**	**Typ†**	**Max.**	**Units**	**Conditions**
D001	VDD	**Supply Voltage (VDDMIN, VDDMAX)**					
		PIC16LF1454/5/9	1.8 2.5	— —	3.6 3.6	V V	FOSC ≤ 20 MHz FOSC ≤ 48 MHz
D001		PIC16F1454/5/9	2.3 2.5	— —	5.5 5.5	V V	FOSC ≤ 20 MHz FOSC ≤ 48 MHz
D002*	VDR	**RAM Data Retention Voltage(1)**					
		PIC16LF1454/5/9	1.5	—	—	V	Device in Sleep mode
D002*		PIC16F1454/5/9	1.7	—	—	V	Device in Sleep mode
D002A	VPOR*	**Power-on Reset Release Voltage**					
		PIC16LF1454/5/9	—	1.6	—	V	
D002A		PIC16F1454/5/9	—	1.7	—	V	
D002B	VPORR*	**Power-on Reset Rearm Voltage**					
		PIC16LF1454/5/9	—	0.8	—	V	
D002B		PIC16F1454/5/9	—	1.65	—	V	
D003	VADFVR	**Fixed Voltage Reference Voltage for ADC, Initial Accuracy**	— — — — — —	1 1 1 1 1 1	— — — — — —	%	1.024V, VDD ≥ 2.5V, 85°C (**NOTE 2**) 1.024V, VDD ≥ 2.5V, 125°C (**NOTE 2**) 2.048V, VDD ≥ 2.5V, 85°C 2.048V, VDD ≥ 2.5V, 125°C 4.096V, VDD ≥ 4.75V, 85°C 4.096V, VDD ≥ 4.75V, 125°C
D003C*	TCVFVR	**Temperature Coefficient, Fixed Voltage Reference**	—	-130	—	ppm/°C	
D003D*	ΔVFVR/ ΔVIN	**Line Regulation, Fixed Voltage Reference**	—	0.270	—	%/V	
D004*	SVDD	**VDD Rise Rate** to ensure internal Power-on Reset signal	0.05	—	—	V/ms	See **Section 6.1 "Power-On Reset (POR)"** for details.

* These parameters are characterized but not tested.

† Data in "Typ" column is at 3.0V, 25°C unless otherwise stated. These parameters are for design guidance only and are not tested.

Note 1: This is the limit to which VDD can be lowered in Sleep mode without losing RAM data.

2: For proper operation, the minimum value of the ADC positive voltage reference must be 1.8V or greater. When selecting the FVR or the VREF+ pin as the source of the ADC positive voltage reference, be aware that the voltage must be 1.8V or greater.

PRELIMINARY

FIGURE 29-3: POR AND POR REARM WITH SLOW RISING VDD

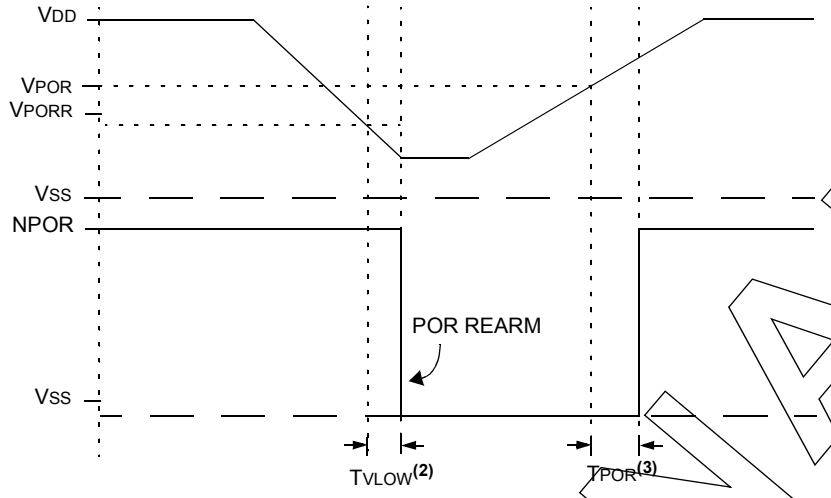

Note 1: When NPOR is low, the device is held in Reset.
2: TPOR 1 μs typical.
3: TVLOW 2.7 μs typical.

PRELIMINARY

 © 2012 Microchip Technology Inc.

29.2 DC Characteristics: PIC16(L)F1454/5/9-I/E (Industrial, Extended)

PIC16LF1454/5/9	Standard Operating Conditions (unless otherwise stated) Operating temperature -40°C ≤ TA ≤ +85°C for industrial -40°C ≤ TA ≤ +125°C for extended
PIC16F1454/5/9	**Standard Operating Conditions (unless otherwise stated)** Operating temperature -40°C ≤ TA ≤ +85°C for industrial -40°C ≤ TA ≤ +125°C for extended

Param No.	Device Characteristics	Min.	Typ†	Max.	Units	Conditions: VDD	Conditions: Note
	Supply Current (IDD)(1, 2)						
D010		—	2	—	μA	1.8	FOSC = 32 kHz LP Oscillator mode
		—	4	—	μA	3.0	
D010		—	16	—	μA	2.3	FOSC = 32 kHz LP Oscillator mode
		—	16	—	μA	3.0	
		—	19	—	μA	5.0	
D011		—	40	—	μA	1.8	FOSC = 1 MHz XT Oscillator mode
		—	80	—	μA	3.0	
D011		—	110	—	μA	2.3	FOSC = 1 MHz XT Oscillator mode
		—	130	—	μA	3.0	
		—	160	—	μA	5.0	
D012		—	120	—	μA	1.8	FOSC = 4 MHz XT Oscillator mode
		—	220	—	μA	3.0	
D012		—	230	—	μA	2.3	FOSC = 4 MHz XT Oscillator mode
		—	300	—	μA	3.0	
		—	350	—	μA	5.0	
D013		—	30	—	μA	1.8	FOSC = 1 MHz EC Oscillator mode, Medium-power mode
		—	50	—	μA	3.0	
D013		—	75	—	μA	2.3	FOSC = 1 MHz EC Oscillator mode Medium-power mode
		—	100	—	μA	3.0	
		—	115	—	μA	5.0	
D014		—	100	—	μA	1.8	FOSC = 4 MHz EC Oscillator mode, Medium-power mode
		—	180	—	μA	3.0	
D014		—	225	—	μA	2.3	FOSC = 4 MHz EC Oscillator mode Medium-power mode
		—	300	—	μA	3.0	
		—	350	—	μA	5.0	
D015		—	2.3	—	μA	1.8	FOSC = 31 kHz LFINTOSC mode
		—	4.0	—	μA	3.0	
D015		—	23	—	μA	2.3	FOSC = 31 kHz LFINTOSC mode
		—	46	—	μA	3.0	
		—	145	—	μA	5.0	

* These parameters are characterized but not tested.

† Data in "Typ" column is at 3.0V, 25°C unless otherwise stated. These parameters are for design guidance only and are not tested.

Note 1: The test conditions for all IDD measurements in active operation mode are: CLKIN = external square wave, from rail-to-rail; all I/O pins tri-stated, pulled to VDD; $\overline{MCLR}$ = VDD; WDT disabled.

2: The supply current is mainly a function of the operating voltage and frequency. Other factors, such as I/O pin loading and switching rate, oscillator type, internal code execution pattern and temperature, also have an impact on the current consumption.

3: For RC oscillator configurations, current through REXT is not included. The current through the resistor can be extended by the formula IR = VDD/2REXT (mA) with REXT in kΩ.

PRELIMINARY

29.2 DC Characteristics: PIC16(L)F1454/5/9-I/E (Industrial, Extended) (Continued)

PIC16LF1454/5/9	Standard Operating Conditions (unless otherwise stated) Operating temperature -40°C ≤ TA ≤ +85°C for industrial -40°C ≤ TA ≤ +125°C for extended
PIC16F1454/5/9	**Standard Operating Conditions (unless otherwise stated)** Operating temperature -40°C ≤ TA ≤ +85°C for industrial -40°C ≤ TA ≤ +125°C for extended

Param No.	Device Characteristics	Min.	Typ†	Max.	Units	Conditions	
						VDD	Note
D016		—	220	—	μA	1.8	FOSC = 500 kHz HFINTOSC mode
		—	280	—	μA	3.0	
D016		—	340	—	μA	2.3	FOSC = 500 kHz HFINTOSC mode
		—	410	—	μA	3.0	
		—	535	—	μA	5.0	
D017*		—	380	—	μA	1.8	FOSC = 8 MHz HFINTOSC mode
		—	560	—	μA	3.0	
D017*		—	720	—	μA	2.3	FOSC = 8 MHz HFINTOSC mode
		—	920	—	μA	3.0	
		—	1017	—	μA	5.0	
D018		—	520	—	μA	1.8	FOSC = 16 MHz HFINTOSC mode
		—	810	—	μA	3.0	
D018		—	1000	—	μA	2.3	FOSC = 16 MHz HFINTOSC mode
		—	1300	—	μA	3.0	
		—	1600	—	μA	5.0	
D019A		—	750	—	μA	3.0	FOSC = 20 MHz ECH mode
D019A		—	1400	—	μA	3.0	FOSC = 20 MHz ECH mode
		—	1600	—	μA	5.0	
D019B		—	6	—	μA	1.8	FOSC = 32 kHz ECL mode
		—	8	—	μA	3.0	
D019B		—	11	—	μA	2.3	FOSC = 32 kHz ECL mode
		—	15	—	μA	3.0	
		—	18	—	μA	5.0	
D019C		—	15	—	μA	1.8	FOSC = 500 kHz ECL mode
		—	20	—	μA	3.0	
D019C		—	35	—	μA	2.3	FOSC = 500 kHz ECL mode
		—	45	—	μA	3.0	
		—	55	—	μA	5.0	
D020		—	150	—	μA	1.8	FOSC = 4 MHz EXTRC mode (**Note 3**)
		—	280	—	μA	3.0	
D020		—	230	—	μA	2.3	FOSC = 4 MHz EXTRC mode (**Note 3**)
		—	310	—	μA	3.0	
		—	370	—	μA	5.0	

* These parameters are characterized but not tested.

† Data in "Typ" column is at 3.0V, 25°C unless otherwise stated. These parameters are for design guidance only and are not tested.

Note 1: The test conditions for all IDD measurements in active operation mode are: CLKIN = external square wave, from rail-to-rail; all I/O pins tri-stated, pulled to VDD; $\overline{MCLR}$ = VDD; WDT disabled.

2: The supply current is mainly a function of the operating voltage and frequency. Other factors, such as I/O pin loading and switching rate, oscillator type, internal code execution pattern and temperature, also have an impact on the current consumption.

3: For RC oscillator configurations, current through REXT is not included. The current through the resistor can be extended by the formula IR = VDD/2REXT (mA) with REXT in kΩ.

PRELIMINARY

 © 2012 Microchip Technology Inc.

29.2 DC Characteristics: PIC16(L)F1454/5/9-I/E (Industrial, Extended) (Continued)

PIC16LF1454/5/9	Standard Operating Conditions (unless otherwise stated) Operating temperature -40°C ≤ TA ≤ +85°C for industrial -40°C ≤ TA ≤ +125°C for extended
PIC16F1454/5/9	**Standard Operating Conditions (unless otherwise stated)** Operating temperature -40°C ≤ TA ≤ +85°C for industrial -40°C ≤ TA ≤ +125°C for extended

Param No.	Device Characteristics	Min.	Typ†	Max.	Units	Conditions	
						VDD	Note
D021		—	1000	—	μA	3.0	FOSC = 20 MHz HS Oscillator mode
D021		—	1350	—	μA	3.0	FOSC = 20 MHz HS Oscillator mode
		—	1700	—	μA	5.0	

* These parameters are characterized but not tested.

† Data in "Typ" column is at 3.0V, 25°C unless otherwise stated. These parameters are for design guidance only and are not tested.

Note 1: The test conditions for all IDD measurements in active operation mode are: CLKIN = external square wave, from rail-to-rail; all I/O pins tri-stated, pulled to VDD; $\overline{MCLR}$ = VDD; WDT disabled.

2: The supply current is mainly a function of the operating voltage and frequency. Other factors, such as I/O pin loading and switching rate, oscillator type, internal code execution pattern and temperature, also have an impact on the current consumption.

3: For RC oscillator configurations, current through REXT is not included. The current through the resistor can be extended by the formula IR = VDD/2REXT (mA) with REXT in kΩ.

PRELIMINARY

29.3 DC Characteristics: PIC16(L)F1454/5/9-I/E (Power-Down)

PIC16LF1454/5/9	Standard Operating Conditions (unless otherwise stated) Operating temperature -40°C ≤ TA ≤ +85°C for industrial -40°C ≤ TA ≤ +125°C for extended
PIC16F1454/5/9	**Standard Operating Conditions (unless otherwise stated)** Operating temperature -40°C ≤ TA ≤ +85°C for industrial -40°C ≤ TA ≤ +125°C for extended

Param No.	Device Characteristics	Min.	Typ†	Max. +85°C	Max. +125°C	Units	Conditions: VDD	Conditions: Note
	Power-down Current (IPD)(2)							
D022		—	0.025	—	—	μA	1.8	Base Current: WDT, BOR, FVR, and SOSC disabled, all Peripherals inactive
		—	0.035	—	—	μA	3.0	
D022		—	0.20	—	—	μA	2.3	WDT, BOR, FVR, and SOSC disabled, all Peripherals inactive (VREGPM = 1; Low-Power mode)
		—	0.25	—	—	μA	3.0	
		—	0.30	—	—	μA	5.0	
D022A		—	10	—	—	μA	2.3	Base Current: WDT, BOR, FVR and SOSC disabled, all peripheral inactive (VREGPM = 0; Normal Power mode)
		—	11	—	—	μA	3.0	
		—	12	—	—	μA	5.0	
D023		—	0.29	—	—	μA	1.8	LPWDT Current **(Note 1)**
		—	0.39	—	—	μA	3.0	
D023		—	10.5	—	—	μA	2.3	LPWDT Current **(Note 1)**
		—	11.3	—	—	μA	3.0	
		—	12.5	—	—	μA	5.0	
D023A		—	14	—	—	μA	1.8	FVR current **(Note 1)**
		—	23	—	—	μA	3.0	
D023A		—	23	—	—	μA	2.3	FVR current **(Note 1)**
		—	30	—	—	μA	3.0	
		—	34	—	—	μA	5.0	
D024		—	7	—	—	μA	3.0	BOR Current **(Note 1)**
D024		—	15	—	—	μA	3.0	BOR Current **(Note 1)**
		—	17	—	—	μA	5.0	
D24A		—	0.1	—	—	μA	3.0	LPBOR Current **(Note 1)**
D24A		—	11	—	—	μA	3.0	LPBOR Current **(Note 1)**
		—	12	—	—	μA	5.0	

* These parameters are characterized but not tested.

† Data in "Typ" column is at 3.0V, 25°C unless otherwise stated. These parameters are for design guidance only and are not tested.

Note 1: The peripheral current is the sum of the base IDD or IPD and the additional current consumed when this peripheral is enabled. The peripheral Δ current can be determined by subtracting the base IDD or IPD current from this limit. Max values should be used when calculating total current consumption.

2: The power-down current in Sleep mode does not depend on the oscillator type. Power-down current is measured with the part in Sleep mode, with all I/O pins in high-impedance state and tied to VDD.

3: A/D oscillator source is FRC.

PRELIMINARY

 © 2012 Microchip Technology Inc.

29.3 DC Characteristics: PIC16(L)F1454/5/9-I/E (Power-Down) (Continued)

PIC16LF1454/5/9	Standard Operating Conditions (unless otherwise stated) Operating temperature -40°C ≤ TA ≤ +85°C for industrial -40°C ≤ TA ≤ +125°C for extended
PIC16F1454/5/9	**Standard Operating Conditions (unless otherwise stated)** Operating temperature -40°C ≤ TA ≤ +85°C for industrial -40°C ≤ TA ≤ +125°C for extended

Param No.	Device Characteristics	Min.	Typ†	Max. +85°C	Max. +125°C	Units	Conditions: VDD	Conditions: Note
D025		—	0.6	—	—	μA	1.8	SOSC Current **(Note 1)**
		—	1.8	—	—	μA	3.0	
D025		—	11	—	—	μA	2.3	SOSC Current **(Note 1)**
		—	13	—	—	μA	3.0	
		—	19	—	—	μA	5.0	
D026		—	.025	—	—	μA	1.8	A/D Current **(Note 1, Note 3)**, no conversion in progress
		—	.035	—	—	μA	3.0	
D026		—	10	—	—	μA	2.3	A/D Current **(Note 1, Note 3)**, no conversion in progress
		—	11	—	—	μA	3.0	
		—	12	—	—	μA	5.0	
D026A*		—	250	—	—	μA	1.8	A/D Current **(Note 1, Note 3)**, conversion in progress
		—	250	—	—	μA	3.0	
D026A*		—	280	—	—	μA	2.3	A/D Current **(Note 1, Note 3)**, conversion in progress
		—	280	—	—	μA	3.0	
		—	280	—	—	μA	5.0	
D027		—	7	—	—	μA	1.8	Comparator, Low-Power mode **(Note 1)**
		—	8	—	—	μA	3.0	
D027		—	17	—	—	μA	2.3	Comparator, Low-Power mode **(Note 1)**
		—	18	—	—	μA	3.0	
		—	19	—	—	μA	5.0	

* These parameters are characterized but not tested.

† Data in "Typ" column is at 3.0V, 25°C unless otherwise stated. These parameters are for design guidance only and are not tested.

Note 1: The peripheral current is the sum of the base IDD or IPD and the additional current consumed when this peripheral is enabled. The peripheral Δ current can be determined by subtracting the base IDD or IPD current from this limit. Max values should be used when calculating total current consumption.

2: The power-down current in Sleep mode does not depend on the oscillator type. Power-down current is measured with the part in Sleep mode, with all I/O pins in high-impedance state and tied to VDD.

3: A/D oscillator source is FRC.

PRELIMINARY

29.4 DC Characteristics: PIC16(L)F1454/5/9-I/E

DC CHARACTERISTICS			Standard Operating Conditions (unless otherwise stated) Operating temperature -40°C ≤ TA ≤ +85°C for industrial -40°C ≤ TA ≤ +125°C for extended				
Param No.	**Sym.**	**Characteristic**	**Min.**	**Typ†**	**Max.**	**Units**	**Conditions**
	V_{IL}	**Input Low Voltage**					
		I/O PORT:					
D030		with TTL buffer	—	—	0.8	V	4.5V ≤ VDD ≤ 5.5V
D030A			—	—	0.15 VDD	V	1.8V ≤ VDD ≤ 4.5V
D031		with Schmitt Trigger buffer	—	—	0.2 VDD	V	2.0V ≤ VDD ≤ 5.5V
		with SMBus	—	—	0.8	V	3.0 ≤ VDD
D032		$\overline{MCLR}$	—	—	0.2 VDD	V	
	V_{IH}	**Input High Voltage**					
		I/O ports:					
D040		with TTL buffer	2.0	—	—	V	4.5V ≤ VDD ≤ 5.5V
D040A			0.25 VDD + 0.8	—	—	V	1.8V ≤ VDD ≤ 4.5V
D041		with Schmitt Trigger buffer	0.8 VDD	—	—	V	2.0V ≤ VDD ≤ 5.5V
		with SMBus	2.1	—	VDD	V	3.0 ≤ VDD
D042		$\overline{MCLR}$	0.8 VDD	—	—	V	
	I_{IL}	**Input Leakage Current(1)**					
D060		I/O ports	—	± 5	± 125	nA	VSS ≤ VPIN ≤ VDD, Pin at high-impedance at 85°C
				± 5	± 1000	nA	125°C
D061		$\overline{MCLR}$(2)	—	± 50	± 200	nA	VSS ≤ VPIN ≤ VDD at 85°C
	I_{PUR}	**Weak Pull-up Current**					
D070*			25 25	100 140	200 300	μA	VDD = 3.3V, VPIN = VSS VDD = 5.0V, VPIN = VSS
	V_{OL}	**Output Low Voltage(3)**					
D080		I/O ports	—	—	0.6	V	IOL = 8mA, VDD = 5V IOL = 6mA, VDD = 3.3V IOL = 1.8mA, VDD = 1.8V
	V_{OH}	**Output High Voltage(3)**					
D090		I/O ports	VDD - 0.7	—	—	V	IOH = 3.5mA, VDD = 5V IOH = 3mA, VDD = 3.3V IOH = 1mA, VDD = 1.8V
		Capacitive Loading Specs on Output Pins					
D101A*	C_{IO}	All I/O pins	—	—	50	pF	

* These parameters are characterized but not tested.

† Data in "Typ" column is at 3.0V, 25°C unless otherwise stated. These parameters are for design guidance only and are not tested.

Note 1: Negative current is defined as current sourced by the pin.

2: The leakage current on the $\overline{MCLR}$ pin is strongly dependent on the applied voltage level. The specified levels represent normal operating conditions. Higher leakage current may be measured at different input voltages.

3: Including OSC2 in CLKOUT mode.

PRELIMINARY

 © 2012 Microchip Technology Inc.

29.5 Memory Programming Requirements

DC CHARACTERISTICS			Standard Operating Conditions (unless otherwise stated) Operating temperature -40°C ≤ TA ≤ +125°C				
Param No.	**Sym.**	**Characteristic**	**Min.**	**Typ†**	**Max.**	**Units**	**Conditions**
		Program Memory Programming Specifications					
D110	VIHH	Voltage on $\overline{MCLR}$/VPP pin	8.0	—	9.0	V	**(Note 2)**
D111	IDDP	Supply Current during Programming	—	—	10	mA	
D112	VBE	VDD for Bulk Erase	2.7	—	VDDMAX	V	
D113	VPEW	VDD for Write or Row Erase	VDDMIN	—	VDDMAX	V	
D114	IPPPGM	Current on $\overline{MCLR}$/VPP during Erase/Write	—	1.0	—	mA	
D115	IDDPGM	Current on VDD during Erase/ Write	—	5.0	—	mA	
		Program Flash Memory					
D121	EP	Cell Endurance	10K	—	—	E/W	-40°C to +85°C **(Note 1)**
D122	VPRW	VDD for Read/Write	VDDMIN	—	VDDMAX	V	
D123	TIW	Self-timed Write Cycle Time	—	2	2.5	ms	
D124	TRETD	Characteristic Retention	—	40	—	Year	Provided no other specifications are violated
D125	EHEFC	High-Endurance Flash Cell	100K	—	—	E/W	0°C to +60°C lower byte, last 128 addresses

† Data in "Typ" column is at 3.0V, 25°C unless otherwise stated. These parameters are for design guidance only and are not tested.

Note 1: Self-write and Block Erase.

2: Required only if single-supply programming is disabled.

PRELIMINARY

29.6 USB Module Specifications

Operating Conditions-40°C ≤ TA ≤ +85°C (unless otherwise state)

Param No.	Sym	Characteristic	Min	Typ	Max	Units	Conditions
D313	VUSB	USB Voltage	3.0	—	3.6	V	Voltage on VUSB3V3 pin must be in this range for proper USB operation
D314	IIL	Input Leakage on pin	—	—	± 1	μA	VSS ≤ VPIN ≤ VDD pin at high impedance
D315	VILUSB	Input Low Voltage for USB Buffer	—	—	0.8	V	For VUSB3V3 range
D316	VIHUSB	Input High Voltage for USB Buffer	2.0	—	—	V	For VUSB3V3 range
D318	VDIFS	Differential Input Sensitivity	—	—	0.2	V	The difference between D+ and D- must exceed this value while VCM is met
D319	VCM	Differential Common Mode Range	0.8	—	2.5	V	
D320	ZOUT	Driver Output Impedance(1)	28	—	44	Ω	
D321	VOL	Voltage Output Low	0.0	—	0.3	V	1.5 kΩ load connected to 3.6V
D322	VOH	Voltage Output High	2.8	—	3.6	V	1.5 kΩ load connected to ground

Note 1: The D+ and D- signal lines have been built-in impedance matching resistors. No external resistors, capacitors or magnetic components are necessary on the D+/D- signal paths between the PIC16(L)F1454/5/9 family device and USB cable.

PRELIMINARY

 © 2012 Microchip Technology Inc.

29.7 Thermal Considerations

Standard Operating Conditions (unless otherwise stated) Operating temperature -40°C ≤ TA ≤ +125°C					
Param No.	**Sym.**	**Characteristic**	**Typ.**	**Units**	**Conditions**
TH01	θJA	Thermal Resistance Junction to Ambient	70	°C/W	14-Pin PDIP package
			95.3	°C/W	14-Pin SOIC package
			100	°C/W	14-Pin TSSOP package
			45.7	°C/W	16-Pin QFN 4x4mm package
			62.2	°C/W	20-pin PDIP package
			77.7	°C/W	20-pin SOIC package
			87.3	°C/W	20-pin SSOP package
			43.0	°C/W	20-pin QFN 4x4mm package
TH02	θJC	Thermal Resistance Junction to Case	32	°C/W	14-Pin PDIP package
			31	°C/W	14-Pin SOIC package
			24.4	°C/W	14-Pin TSSOP package
			6.3	°C/W	16-Pin QFN 4x4mm package
			27.5	°C/W	20-pin PDIP package
			23.1	°C/W	20-pin SOIC package
			31.1	°C/W	20-pin SSOP package
			5.3	°C/W	20-pin QFN 4x4mm package
TH03	TJMAX	Maximum Junction Temperature	150	°C	
TH04	PD	Power Dissipation	—	W	PD = PINTERNAL + PI/O
TH05	PINTERNAL	Internal Power Dissipation	—	W	PINTERNAL = IDD x VDD(1)
TH06	PI/O	I/O Power Dissipation	—	W	PI/O = Σ (IOL * VOL) + Σ (IOH * (VDD - VOH))
TH07	PDER	Derated Power	—	W	PDER = PDMAX (TJ - TA)/θJA(2)

Note 1: IDD is current to run the chip alone without driving any load on the output pins.
2: TA = Ambient Temperature
3: TJ = Junction Temperature

PRELIMINARY

29.8 Timing Parameter Symbology

The timing parameter symbols have been created with one of the following formats:

1. TppS2ppS
2. TppS

T			
F	Frequency	T	Time

Lowercase letters (pp) and their meanings:

pp			
cc	CCP1	osc	CLKIN
ck	CLKOUT	rd	$\overline{RD}$
cs	$\overline{CS}$	rw	$\overline{RD}$ or $\overline{WR}$
di	SDIx	sc	SCKx
do	SDO	ss	$\overline{SS}$
dt	Data in	t0	T0CKI
io	I/O PORT	t1	T1CKI
mc	$\overline{MCLR}$	wr	$\overline{WR}$

Uppercase letters and their meanings:

S			
F	Fall	P	Period
H	High	R	Rise
I	Invalid (High-impedance)	V	Valid
L	Low	Z	High-impedance

FIGURE 29-4: LOAD CONDITIONS

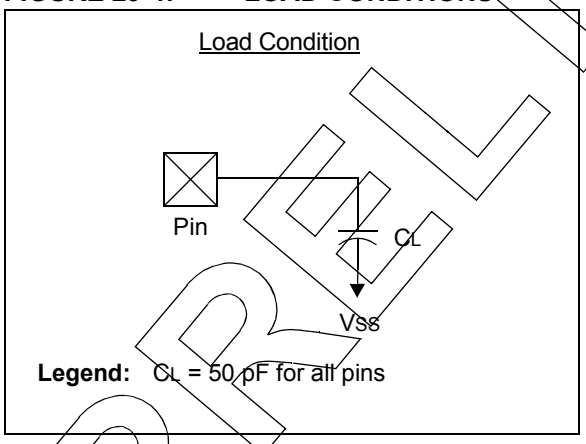

PRELIMINARY

 © 2012 Microchip Technology Inc.

29.9 AC Characteristics: PIC16(L)F1454/5/9-I/E

FIGURE 29-5: CLOCK TIMING

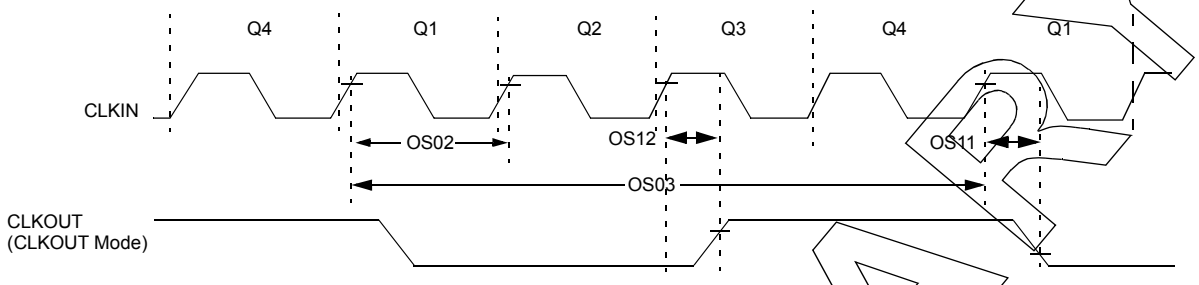

Note 1: See Table 29-3 for timing information.

TABLE 29-1: CLOCK OSCILLATOR TIMING REQUIREMENTS

Standard Operating Conditions (unless otherwise stated)
Operating temperature -40°C ≤ TA ≤ +125°C

Param No.	Sym.	Characteristic	Min.	Typ†	Max.	Units	Conditions
OS01	FOSC	External CLKIN Frequency(1)	DC	—	0.5	MHz	EC Oscillator mode (low)
			DC	—	4	MHz	EC Oscillator mode (medium)
			DC	—	20	MHz	EC Oscillator mode (high)
OS02	TOSC	External CLKIN Period(1)	31.25	—	∞	ns	EC mode
OS03	TCY	Instruction Cycle Time(1)	125	—	DC	ns	TCY = FOSC/4

* These parameters are characterized but not tested.

† Data in "Typ" column is at 3.0V, 25°C unless otherwise stated. These parameters are for design guidance only and are not tested.

Note 1: Instruction cycle period (TCY) equals four times the input oscillator time base period. All specified values are based on characterization data for that particular oscillator type under standard operating conditions with the device executing code. Exceeding these specified limits may result in an unstable oscillator operation and/or higher than expected current consumption. All devices are tested to operate at "min" values with an external clock applied to CLKIN pin. When an external clock input is used, the "max" cycle time limit is "DC" (no clock) for all devices.

TABLE 29-2: OSCILLATOR PARAMETERS

Standard Operating Conditions (unless otherwise stated)
Operating Temperature -40°C ≤ TA ≤ +125°C

Param No.	Sym.	Characteristic	Min.	Typ†	Max.	Units	Conditions
OS08	HFOSC	Internal Calibrated HFINTOSC Frequency(1)	—	16.0	—	MHz	0°C ≤ TA ≤ +85°C
OS08A	HFTOL	Frequency Tolerance	—	± 3	—	%	+25°C, 16 MHz
			—	± 6	—	%	0°C ≤ TA ≤ +85°C, 16 MHz
OS09	LFOSC	Internal LFINTOSC Frequency	—	31	—	kHz	-40°C ≤ TA ≤ +125°C
OS10*	TIOSC ST	HFINTOSC Wake-up from Sleep Start-up Time	—	5	8	μs	
OS11*	TUNELOCK	HFINTOSC Self-tune Lock Time	—	<5	8	mS	**NOTE 2**

* These parameters are characterized but not tested.

† Data in "Typ" column is at 3.0V, 25°C unless otherwise stated. These parameters are for design guidance only and are not tested.

Note 1: To ensure these oscillator frequency tolerances, VDD and VSS must be capacitively decoupled as close to the device as possible. 0.1 μF and 0.01 μF values in parallel are recommended.

2: Time for reference clock stable and in range to HFINTOSC tuned within range specified by OS08A (with Self-Tune).

PRELIMINARY

FIGURE 29-6: CLKOUT AND I/O TIMING

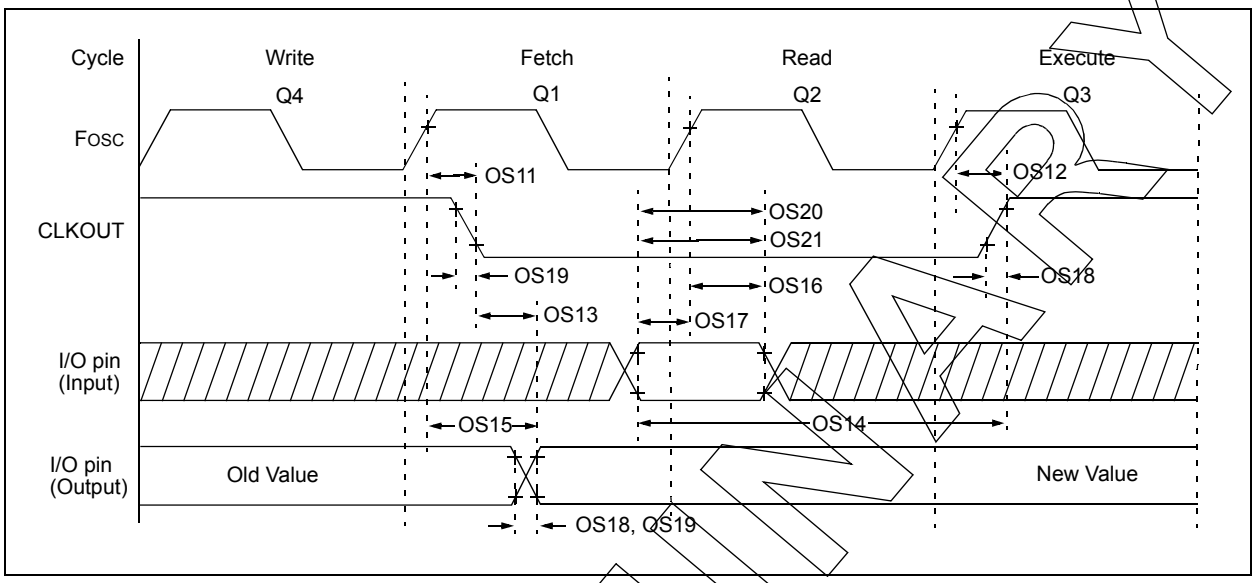

TABLE 29-3: CLKOUT AND I/O TIMING PARAMETERS

Standard Operating Conditions (unless otherwise stated)
Operating Temperature -40°C ≤ TA ≤ +125°C

Param No.	Sym.	Characteristic	Min.	Typ†	Max.	Units	Conditions
OS11	TosH2ckL	FOSC↑ to CLKOUT↓ (1)	—	—	70	ns	VDD = 3.3-5.0V
OS12	TosH2ckH	FOSC↑ to CLKOUT↑ (1)	—	—	72	ns	VDD = 3.3-5.0V
OS13	TckL2ioV	CLKOUT↓ to Port out valid(1)	—	—	20	ns	
OS14	TioV2ckH	Port input valid before CLKOUT↑(1)	TOSC + 200 ns	—	—	ns	
OS15	TosH2ioV	Fosc↑ (Q1 cycle) to Port out valid	—	50	70*	ns	VDD = 3.3-5.0V
OS16	TosH2ioI	Fosc↑ (Q2 cycle) to Port input invalid (I/O in hold time)	50	—	—	ns	VDD = 3.3-5.0V
OS17	TioV2osH	Port input valid to Fosc↑ (Q2 cycle) (I/O in setup time)	20	—	—	ns	
OS18*	TioR	Port output rise time(2)	— —	15 40	32 72	ns	VDD = 2.0V VDD = 5.0V
OS19*	TioF	Port output fall time(2)	— —	28 15	55 30	ns	VDD = 2.0V VDD = 5.0V
OS20*	Tinp	INT pin input high or low time	25	—	—	ns	
OS21*	Tioc	Interrupt-on-change new input level time	25	—	—	ns	

* These parameters are characterized but not tested.
† Data in "Typ" column is at 3.0V, 25°C unless otherwise stated.
Note 1: Measurements are taken in EC mode where CLKOUT output is 4 x TOSC.

PRELIMINARY

 © 2012 Microchip Technology Inc.

FIGURE 29-7: RESET, WATCHDOG TIMER, OSCILLATOR START-UP TIMER AND POWER-UP TIMER TIMING

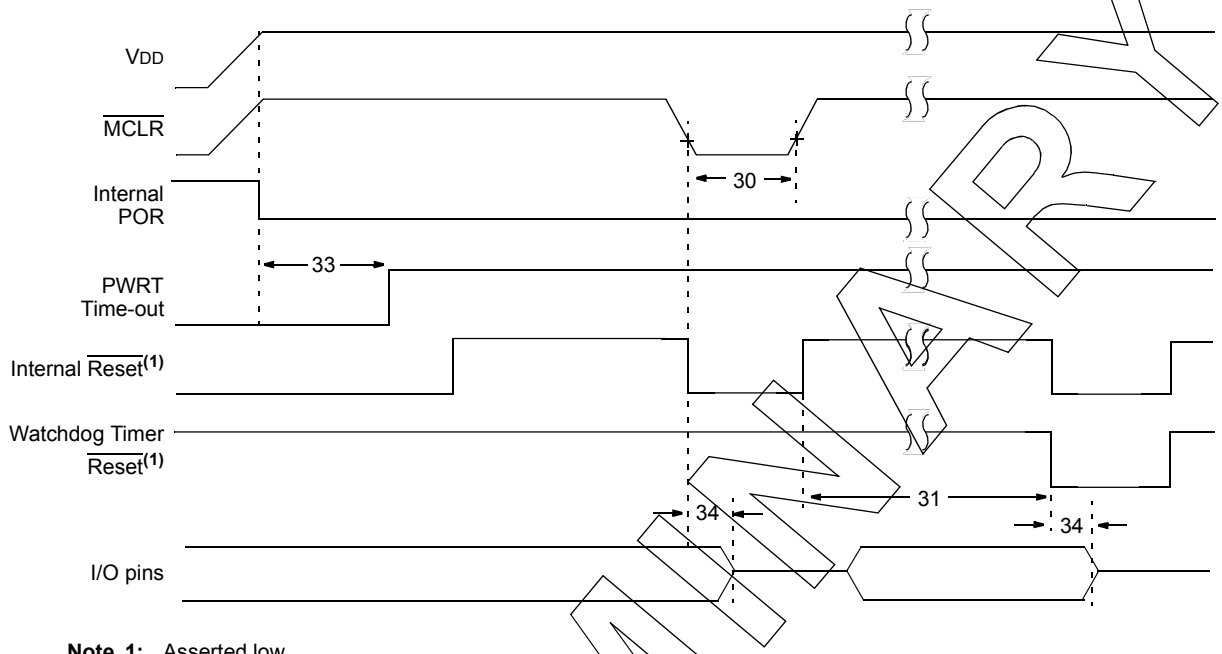

Note 1: Asserted low.

FIGURE 29-8: BROWN-OUT RESET TIMING AND CHARACTERISTICS

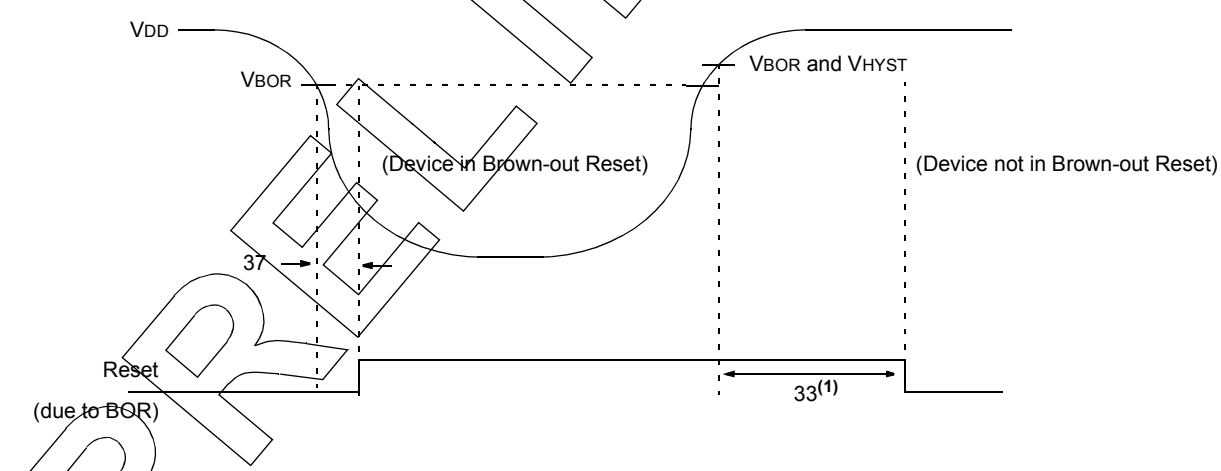

Note 1: 64 ms delay only if $\overline{\text{PWRTE}}$ bit in the Configuration Words is programmed to '0'.
2 ms delay if $\overline{\text{PWRTE}}$ = 0 and VREGEN = 1.

PRELIMINARY

TABLE 29-4: RESET, WATCHDOG TIMER, OSCILLATOR START-UP TIMER, POWER-UP TIMER AND BROWN-OUT RESET PARAMETERS

Standard Operating Conditions (unless otherwise stated) Operating Temperature -40°C ≤ TA ≤ +125°C							
Param No.	**Sym.**	**Characteristic**	**Min.**	**Typ†**	**Max.**	**Units**	**Conditions**
30	TMCL	$\overline{\text{MCLR}}$ Pulse Width (low)	2 5	— —	— —	μs μs	VDD = 3.3-5V, -40°C to +85°C VDD = 3.3-5V
31	TWDTLP	Low-Power Watchdog Timer Time-out Period	10	16	27	ms	VDD = 3.3V-5V, 1:16 Prescaler used
33*	TPWRT	Power-up Timer Period, $\overline{\text{PWRTE}}$ = 0	40	65	140	ms	
34*	TIOZ	I/O high-impedance from $\overline{\text{MCLR}}$ Low or Watchdog Timer Reset	—	—	2.0	μs	
35	VBOR	Brown-out Reset Voltage(2)	2.55 1.80	2.70 1.90	2.85 2.11	V V	BORV = 0 BORV = 1
36*	VHYST	Brown-out Reset Hysteresis	0	25	50	mV	-40°C to +85°C
37*	TBORDC	Brown-out Reset DC Response Time	1	3	5	μs	VDD ≤ VBOR
38*	VLPOR	Low-Power Brown-out	1.8	2.1	2.5	V	LPBOR = 1

* These parameters are characterized but not tested.

† Data in "Typ" column is at 3.0V, 25°C unless otherwise stated. These parameters are for design guidance only and are not tested.

Note 1: To ensure these voltage tolerances, VDD and VSS must be capacitively decoupled as close to the device as possible. 0.1 μF and 0.01 μF values in parallel are recommended.

2: To ensure these voltage tolerances, VDD and VSS must be capacitively decoupled as close to the device as possible. 0.1 μF and 0.01 μF values in parallel are recommended.

FIGURE 29-9: TIMER0 AND TIMER1 EXTERNAL CLOCK TIMINGS

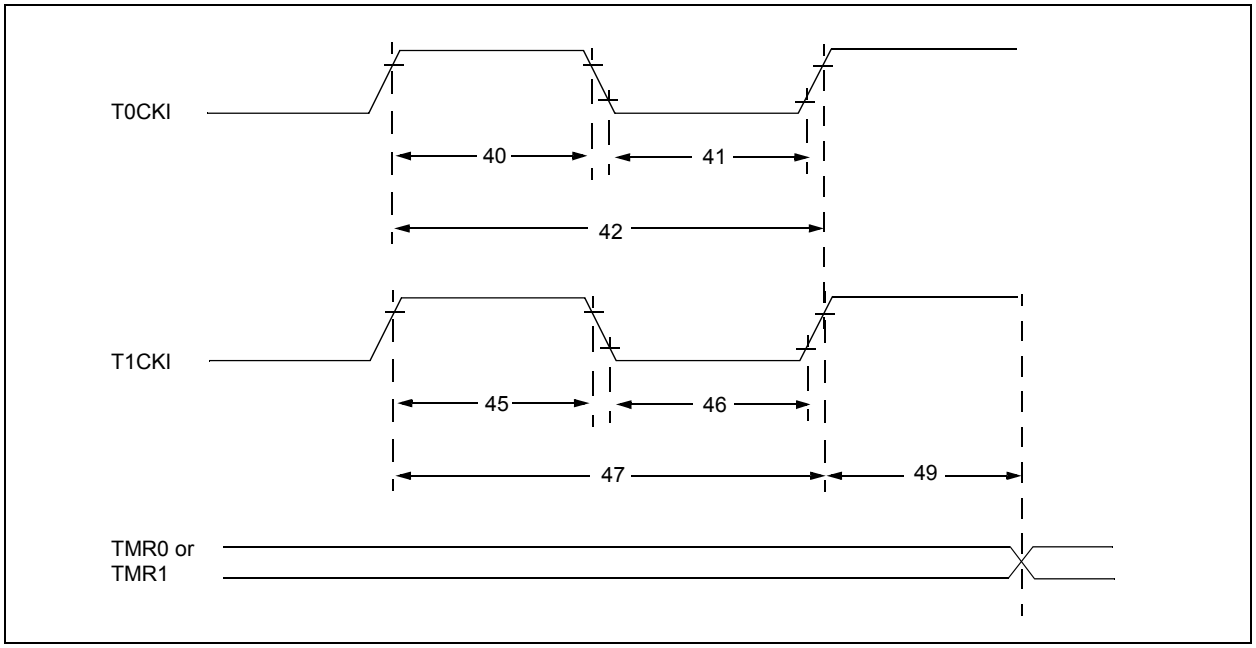

 © 2012 Microchip Technology Inc.

TABLE 29-5: TIMER0 AND TIMER1 EXTERNAL CLOCK REQUIREMENTS

Standard Operating Conditions (unless otherwise stated)
Operating Temperature -40°C ≤ TA ≤ +125°C

Param No.	Sym.	Characteristic		Min.	Typ†	Max.	Units	Conditions
40*	TT0H	T0CKI High Pulse Width	No Prescaler	0.5 TCY + 20	—	—	ns	
			With Prescaler	10	—	—	ns	
41*	TT0L	T0CKI Low Pulse Width	No Prescaler	0.5 TCY + 20	—	—	ns	
			With Prescaler	10	—	—	ns	
42*	TT0P	T0CKI Period		Greater of: 20 or $\frac{T_{CY} + 40}{N}$	—	—	ns	N = prescale value (2, 4, ..., 256)
45*	TT1H	T1CKI High Time	Synchronous, No Prescaler	0.5 TCY + 20	—	—	ns	
			Synchronous, with Prescaler	15	—	—	ns	
			Asynchronous	30	—	—	ns	
46*	TT1L	T1CKI Low Time	Synchronous, No Prescaler	0.5 TCY + 20	—	—	ns	
			Synchronous, with Prescaler	15	—	—	ns	
			Asynchronous	30	—	—	ns	
47*	TT1P	T1CKI Input Period	Synchronous	Greater of: 30 or $\frac{T_{CY} + 40}{N}$	—	—	ns	N = prescale value (1, 2, 4, 8)
			Asynchronous	60	—	—	ns	
49*	TCKEZTMR1	Delay from External Clock Edge to Timer Increment		2 TOSC	—	7 TOSC	—	Timers in Sync mode

* These parameters are characterized but not tested.
† Data in "Typ" column is at 3.0V, 25°C unless otherwise stated. These parameters are for design guidance only and are not tested.

Note 1: For proper operation, the minimum value of the ADC positive voltage reference must be 1.8V or greater.

TABLE 29-6: PIC16(L)F1454/5/9 A/D CONVERTER (ADC) CHARACTERISTICS:

Standard Operating Conditions (unless otherwise stated)
Operating temperature Tested at 25°C

Param No.	Sym.	Characteristic	Min.	Typ†	Max.	Units	Conditions
AD01	NR	Resolution	—	—	10	bit	
AD02	EIL	Integral Error	—	—	±1.7	LSb	VREF = 3.0V
AD03	EDL	Differential Error	—	—	±1	LSb	No missing codes VREF = 3.0V
AD04	EOFF	Offset Error	—	—	±2.5	LSb	VREF = 3.0V
AD05	EGN	Gain Error	—	—	±2.0	LSb	VREF = 3.0V
AD06	VREF	Reference Voltage(3)	1.8	—	VDD	V	VREF = (VREF+ minus VREF-)
AD07	VAIN	Full-Scale Range	VSS	—	VREF	V	
AD08	ZAIN	Recommended Impedance of Analog Voltage Source	—	—	10	kΩ	Can go higher if external 0.01µF capacitor is present on input pin.

* These parameters are characterized but not tested.
† Data in "Typ" column is at 3.0V, 25°C unless otherwise stated. These parameters are for design guidance only and are not tested.

Note 1: Total Absolute Error includes integral, differential, offset and gain errors.
2: The A/D conversion result never decreases with an increase in the input voltage and has no missing codes.
3: ADC VREF is from external VREF+ pin, VDD pin, whichever is selected as reference input.
4: When ADC is off, it will not consume any current other than leakage current. The power-down current specification includes any such leakage from the ADC module.

TABLE 29-7: PIC16(L)F1454/5/9 A/D CONVERSION REQUIREMENTS

Standard Operating Conditions (unless otherwise stated)
Operating temperature -40°C ≤ TA ≤ +125°C

Param No.	Sym.	Characteristic	Min.	Typ†	Max.	Units	Conditions
AD130*	TAD	A/D Clock Period	1.0	—	9.0	μs	TOSC-based
		A/D Internal FRC Oscillator Period	1.0	1.6	6.0	μs	ADCS<1:0> = 11 (ADFRC mode)
AD131	TCNV	Conversion Time (not including Acquisition Time)(1)	—	11	—	TAD	Set GO/$\overline{\text{DONE}}$ bit to conversion complete
AD132*	TACQ	Acquisition Time	—	5.0	—	μs	

* These parameters are characterized but not tested.
† Data in "Typ" column is at 3.0V, 25°C unless otherwise stated. These parameters are for design guidance only and are not tested.
Note 1: The ADRES register may be read on the following TCY cycle.

FIGURE 29-10: PIC16(L)F1454/5/9 A/D CONVERSION TIMING (NORMAL MODE)

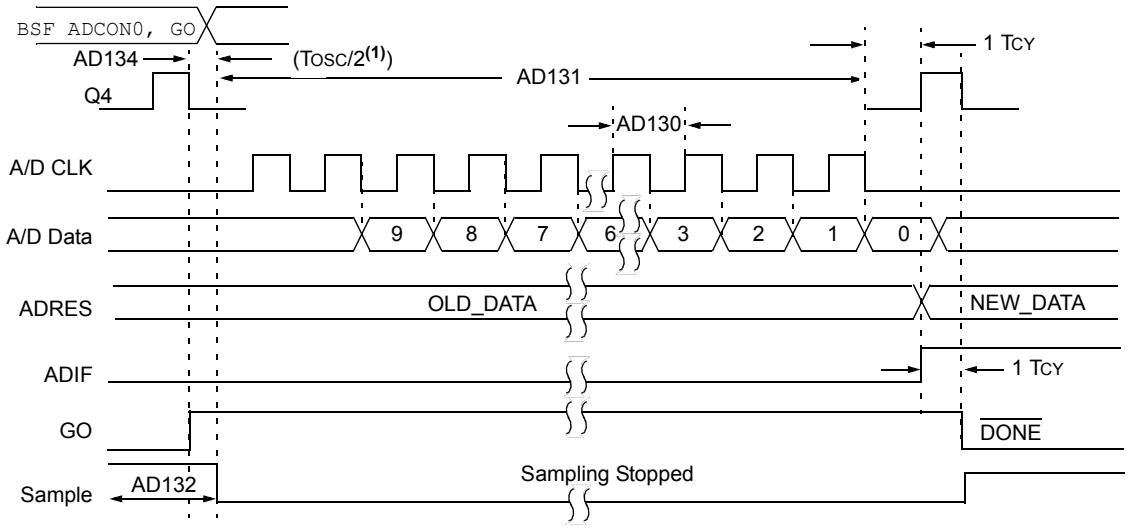

Note 1: If the A/D clock source is selected as FRC, a time of TCY is added before the A/D clock starts. This allows the SLEEP instruction to be executed.

 © 2012 Microchip Technology Inc.

FIGURE 29-11: PIC16(L)F1454/5/9 A/D CONVERSION TIMING (SLEEP MODE)

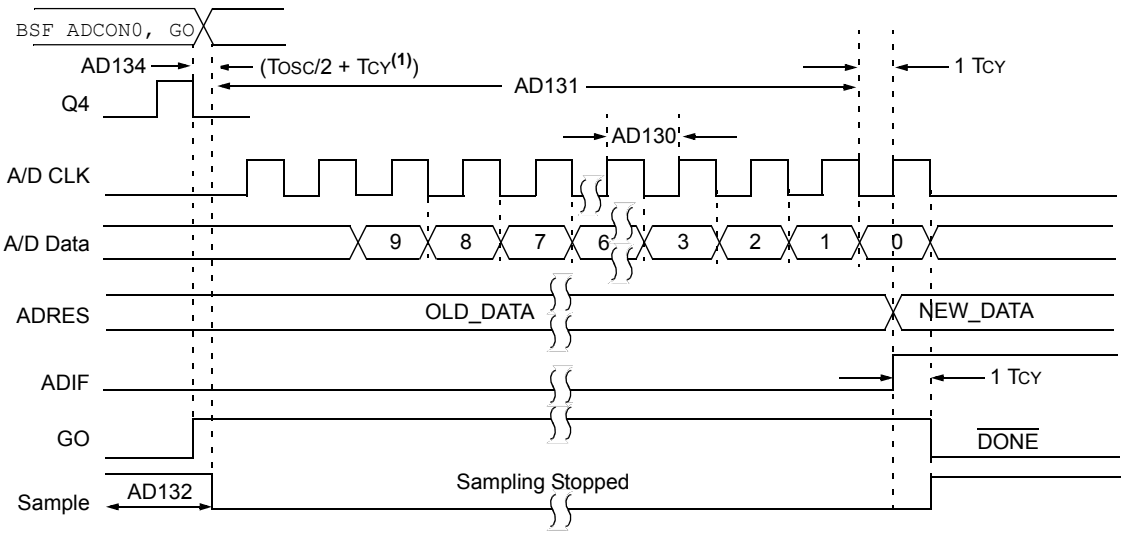

Note 1: If the A/D clock source is selected as FRC, a time of TCY is added before the A/D clock starts. This allows the SLEEP instruction to be executed.

TABLE 29-8: COMPARATOR SPECIFICATIONS

Operating Conditions: 1.8V < VDD < 5.5V, -40°C < TA < +125°C (unless otherwise stated).							
Param No.	**Sym.**	**Characteristics**	**Min.**	**Typ.**	**Max.**	**Units**	**Comments**
CM01	VIOFF	Input Offset Voltage	—	±7.5	±60	mV	High Power mode VICM = VDD/2
CM02	VICM	Input Common Mode Voltage	0	—	VDD	V	
CM04A	TRESP	Response Time Rising Edge	—	400	800	ns	High-Power mode (**Note 1**)
CM04B		Response Time Falling Edge	—	200	400	ns	High-Power mode (**Note 1**)
CM04C		Response Time Rising Edge	—	1200	—	ns	Low-Power mode (**Note 1**)
CM04D		Response Time Falling Edge	—	550	—	ns	Low-Power mode (**Note 1**)
CM05	TMC2OV	Comparator Mode Change to Output Valid*	—	—	10	μs	
CM06	CHYSTER	Comparator Hysteresis	—	65	—	mV	**Note 2**

* These parameters are characterized but not tested.

Note 1: Response time measured with one comparator input at VDD/2, while the other input transitions from VSS to VDD.

2: Comparator Hysteresis is available when the CxHYS bit of the CMxCON0 register is enabled.

TABLE 29-9: DIGITAL-TO-ANALOG CONVERTER (DAC) SPECIFICATIONS

Operating Conditions: 1.8V < VDD < 5.5V, -40°C < TA < +125°C (unless otherwise stated).							
Param No.	**Sym.**	**Characteristics**	**Min.**	**Typ.**	**Max.**	**Units**	**Comments**
DAC01*	CLSB	Step Size	—	VDD/32	—	V	
DAC02*	CACC	Absolute Accuracy	—	—	± 1/2	LSb	
DAC03*	CR	Unit Resistor Value (R)	—	5K	—	Ω	
DAC04*	CST	Settling Time(1)	—	—	10	μs	

* These parameters are characterized but not tested.

Note 1: Settling time measured while DACR<4:0> transitions from '0000' to '1111'.

 © 2012 Microchip Technology Inc.

FIGURE 29-12: USART SYNCHRONOUS TRANSMISSION (MASTER/SLAVE) TIMING

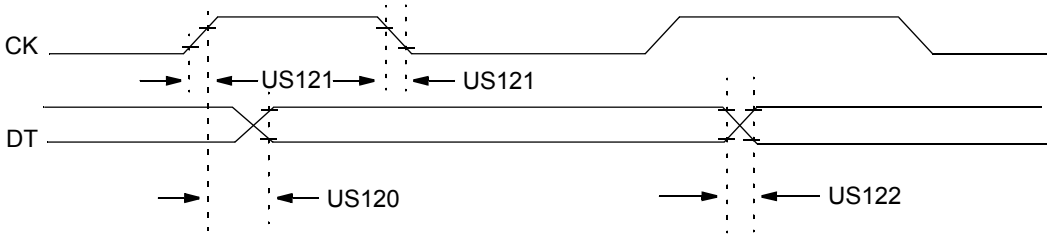

Note: Refer to Figure 29-4 for load conditions.

TABLE 29-10: USART SYNCHRONOUS TRANSMISSION REQUIREMENTS

Standard Operating Conditions (unless otherwise stated)
Operating Temperature -40°C ≤ TA ≤ +125°C

Param. No.	Symbol	Characteristic		Min.	Max.	Units	Conditions
US120	TCKH2DTV	SYNC XMIT (Master and Slave) Clock high to data-out valid	3.0-5.5V	—	80	ns	
			1.8-5.5V	—	100	ns	
US121	TCKRF	Clock out rise time and fall time (Master mode)	3.0-5.5V	—	45	ns	
			1.8-5.5V	—	50	ns	
US122	TDTRF	Data-out rise time and fall time	3.0-5.5V	—	45	ns	
			1.8-5.5V	—	50	ns	

FIGURE 29-13: USART SYNCHRONOUS RECEIVE (MASTER/SLAVE) TIMING

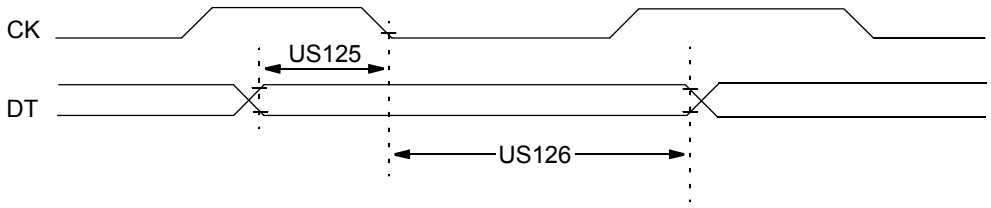

Note: Refer to Figure 29-4 for load conditions.

TABLE 29-11: USART SYNCHRONOUS RECEIVE REQUIREMENTS

Standard Operating Conditions (unless otherwise stated)
Operating Temperature -40°C ≤ TA ≤ +125°C

Param. No.	Symbol	Characteristic	Min.	Max.	Units	Conditions
US125	TDTV2CKL	SYNC RCV (Master and Slave) Data-hold before CK ↓ (DT hold time)	10	—	ns	
US126	TCKL2DTL	Data-hold after CK ↓ (DT hold time)	15	—	ns	

FIGURE 29-14: SPI MASTER MODE TIMING (CKE = 0, SMP = 0)

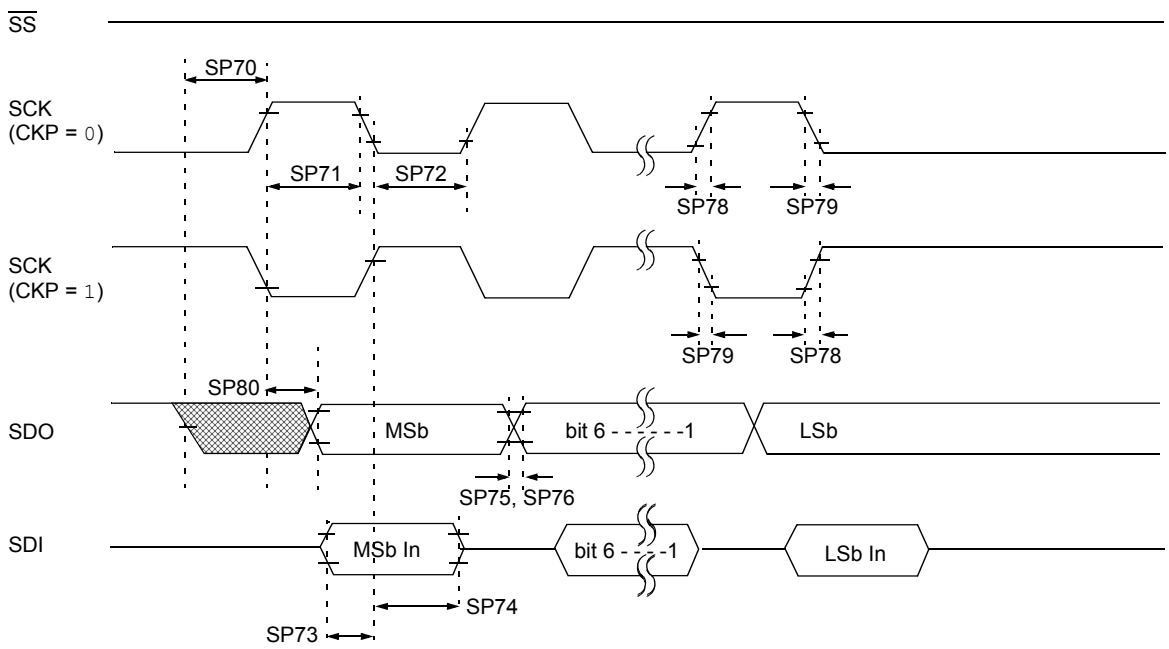

Note: Refer to Figure 29-4 for load conditions.

FIGURE 29-15: SPI MASTER MODE TIMING (CKE = 1, SMP = 1)

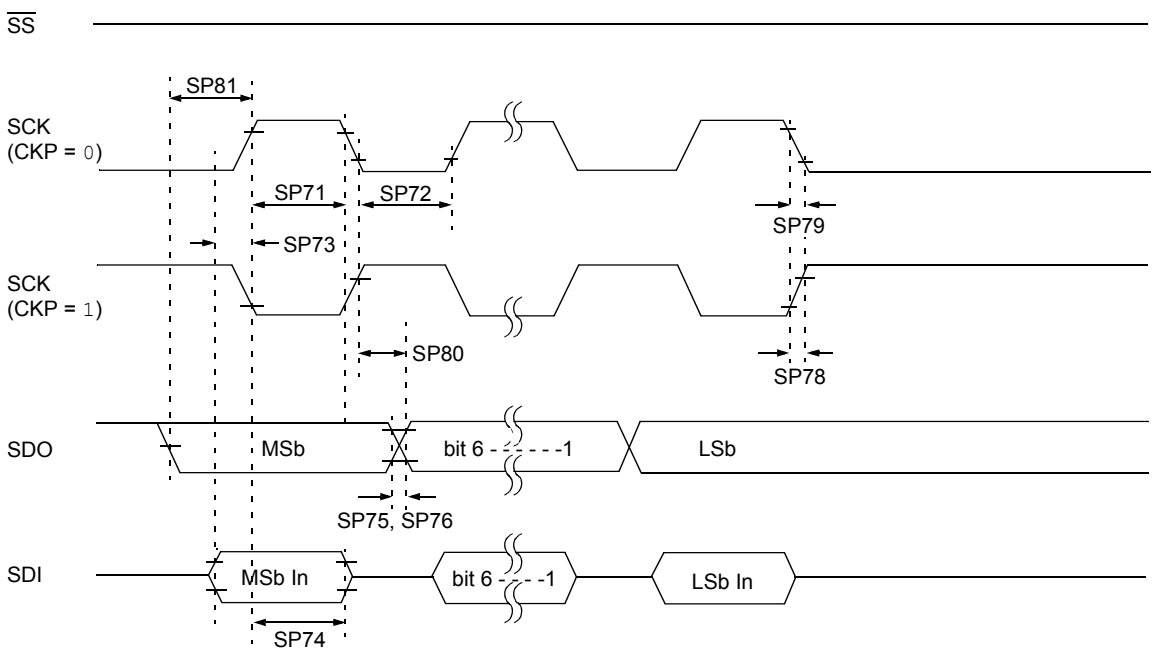

Note: Refer to Figure 29-4 for load conditions.

 © 2012 Microchip Technology Inc.

FIGURE 29-16: SPI SLAVE MODE TIMING (CKE = 0)

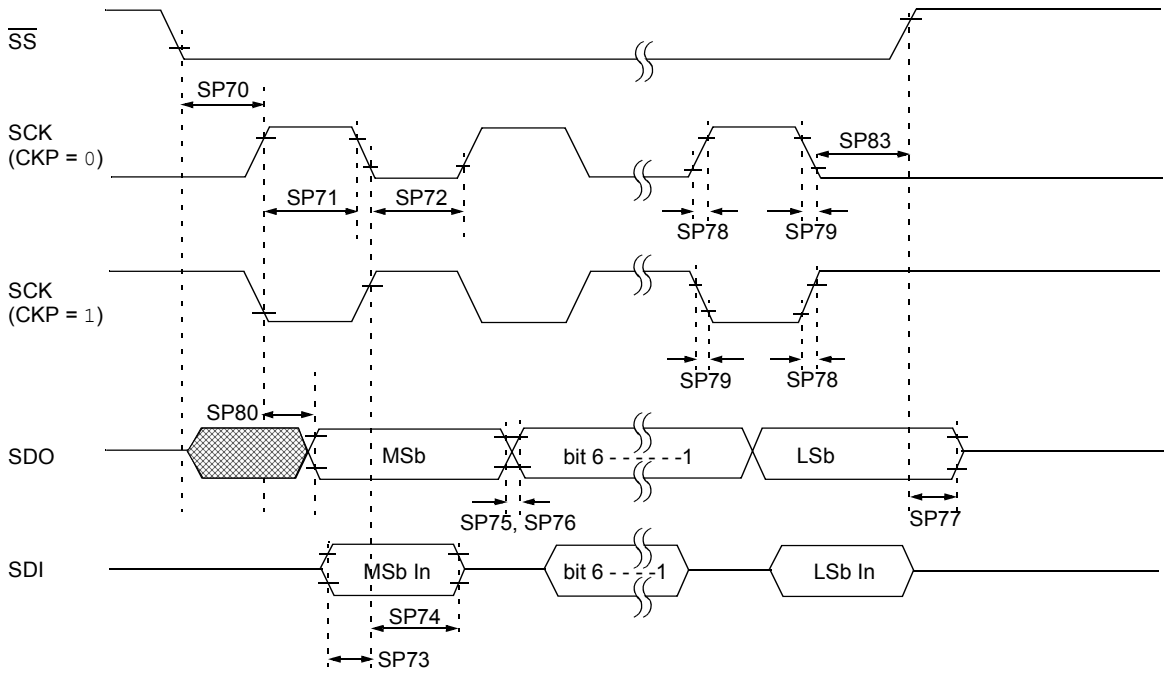

Note: Refer to Figure 29-4 for load conditions.

FIGURE 29-17: SPI SLAVE MODE TIMING (CKE = 1)

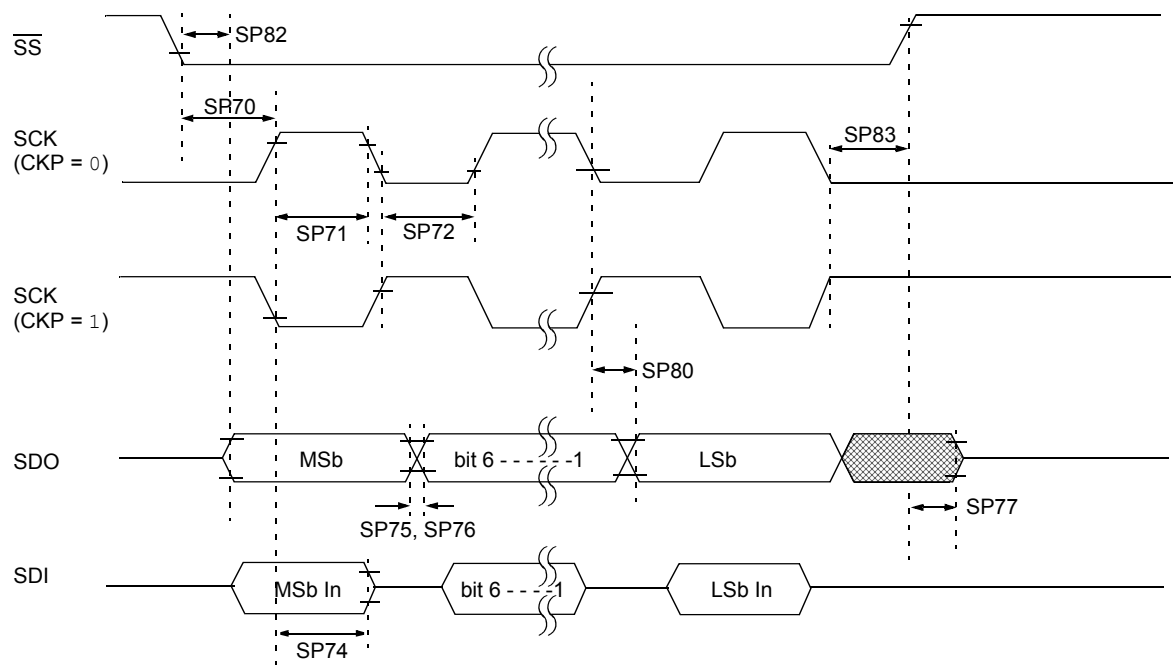

Note: Refer to Figure 29-4 for load conditions.

TABLE 29-12: SPI MODE REQUIREMENTS

Param No.	Symbol	Characteristic		Min.	Typ†	Max.	Units	Conditions
SP70*	TssL2scH, TssL2scL	$\overline{SS}$↓ to SCK↓ or SCK↑ input		TCY	—	—	ns	
SP71*	TscH	SCK input high time (Slave mode)		TCY + 20	—	—	ns	
SP72*	TscL	SCK input low time (Slave mode)		TCY + 20	—	—	ns	
SP73*	TdiV2scH, TdiV2scL	Setup time of SDI data input to SCK edge		100	—	—	ns	
SP74*	TscH2diL, TscL2diL	Hold time of SDI data input to SCK edge		100	—	—	ns	
SP75*	TdoR	SDO data output rise time	3.0-5.5V	—	10	25	ns	
			1.8-5.5V	—	25	50	ns	
SP76*	TdoF	SDO data output fall time		—	10	25	ns	
SP77*	TssH2doZ	$\overline{SS}$↑ to SDO output high-impedance		10	—	50	ns	
SP78*	TscR	SCK output rise time (Master mode)	3.0-5.5V	—	10	25	ns	
			1.8-5.5V	—	25	50	ns	
SP79*	TscF	SCK output fall time (Master mode)		—	10	25	ns	
SP80*	TscH2doV, TscL2doV	SDO data output valid after SCK edge	3.0-5.5V	—	—	50	ns	
			1.8-5.5V	—	—	145	ns	
SP81*	TdoV2scH, TdoV2scL	SDO data output setup to SCK edge		Tcy	—	—	ns	
SP82*	TssL2doV	SDO data output valid after $\overline{SS}$↓ edge		—	—	50	ns	
SP83*	TscH2ssH, TscL2ssH	$\overline{SS}$ ↑ after SCK edge		1.5TCY + 40	—	—	ns	

* These parameters are characterized but not tested.

† Data in “Typ” column is at 3.0V, 25°C unless otherwise stated. These parameters are for design guidance only and are not tested.

 © 2012 Microchip Technology Inc.

FIGURE 29-18: I²C™ BUS START/STOP BITS TIMING

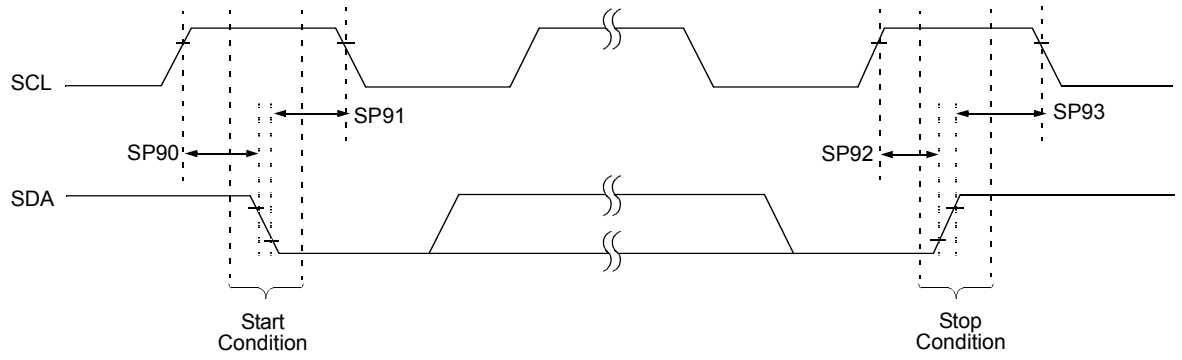

Note: Refer to Figure 29-4 for load conditions.

TABLE 29-13: I²C™ BUS START/STOP BITS REQUIREMENTS

Param No.	Symbol	Characteristic		Min.	Typ	Max.	Units	Conditions
SP90*	TSU:STA	Start condition Setup time	100 kHz mode	4700	—	—	ns	Only relevant for Repeated Start condition
			400 kHz mode	600	—	—		
SP91*	THD:STA	Start condition Hold time	100 kHz mode	4000	—	—	ns	After this period, the first clock pulse is generated
			400 kHz mode	600	—	—		
SP92*	TSU:STO	Stop condition Setup time	100 kHz mode	4700	—	—	ns	
			400 kHz mode	600	—	—		
SP93	THD:STO	Stop condition Hold time	100 kHz mode	4000	—	—	ns	
			400 kHz mode	600	—	—		

* These parameters are characterized but not tested.

FIGURE 29-19: I²C™ BUS DATA TIMING

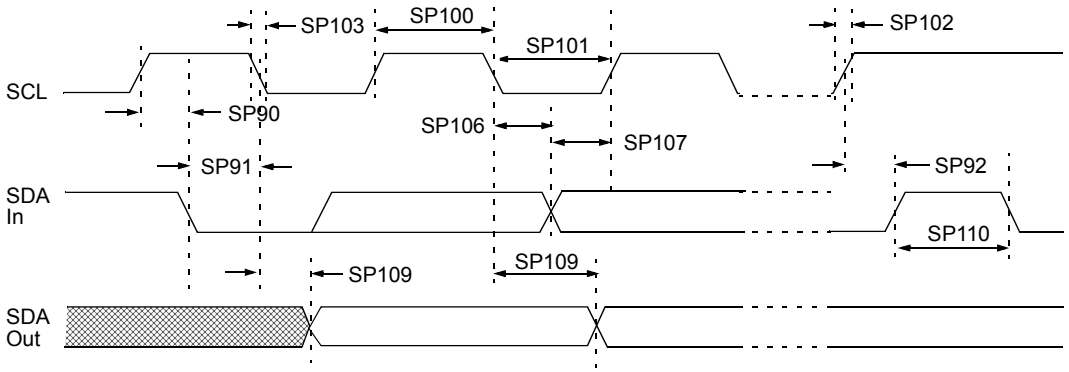

Note: Refer to Figure 29-4 for load conditions.

TABLE 29-14: I²C™ BUS DATA REQUIREMENTS

Param. No.	Symbol	Characteristic		Min.	Max.	Units	Conditions
SP100*	THIGH	Clock high time	100 kHz mode	4.0	—	μs	Device must operate at a minimum of 1.5 MHz
			400 kHz mode	0.6	—	μs	Device must operate at a minimum of 10 MHz
			SSP module	1.5TCY	—		
SP101*	TLOW	Clock low time	100 kHz mode	4.7	—	μs	Device must operate at a minimum of 1.5 MHz
			400 kHz mode	1.3	—	μs	Device must operate at a minimum of 10 MHz
			SSP module	1.5TCY	—		
SP102*	TR	SDA and SCL rise time	100 kHz mode	—	1000	ns	
			400 kHz mode	20 + 0.1CB	300	ns	CB is specified to be from 10-400 pF
SP103*	TF	SDA and SCL fall time	100 kHz mode	—	250	ns	
			400 kHz mode	20 + 0.1CB	250	ns	CB is specified to be from 10-400 pF
SP106*	THD:DAT	Data input hold time	100 kHz mode	0	—	ns	
			400 kHz mode	0	0.9	μs	
SP107*	TSU:DAT	Data input setup time	100 kHz mode	250	—	ns	**(Note 2)**
			400 kHz mode	100	—	ns	
SP109*	TAA	Output valid from clock	100 kHz mode	—	3500	ns	**(Note 1)**
			400 kHz mode	—	—	ns	
SP110*	TBUF	Bus free time	100 kHz mode	4.7	—	μs	Time the bus must be free before a new transmission can start
			400 kHz mode	1.3	—	μs	
SP111	CB	Bus capacitive loading		—	400	pF	

* These parameters are characterized but not tested.

Note 1: As a transmitter, the device must provide this internal minimum delay time to bridge the undefined region (min. 300 ns) of the falling edge of SCL to avoid unintended generation of Start or Stop conditions.

2: A Fast mode (400 kHz) I²C™ bus device can be used in a Standard mode (100 kHz) I²C bus system, but the requirement TSU:DAT ≥ 250 ns must then be met. This will automatically be the case if the device does not stretch the low period of the SCL signal. If such a device does stretch the low period of the SCL signal, it must output the next data bit to the SDA line TR max. + TSU:DAT = 1000 + 250 = 1250 ns (according to the Standard mode I²C bus specification), before the SCL line is released.

 © 2012 Microchip Technology Inc.

NOTES:

 © 2012 Microchip Technology Inc.

30.0 DC AND AC CHARACTERISTICS GRAPHS AND CHARTS

Graphs and charts are not available at this time.

NOTES:

 © 2012 Microchip Technology Inc.

31.0 DEVELOPMENT SUPPORT

The PIC® microcontrollers and dsPIC® digital signal controllers are supported with a full range of software and hardware development tools:

- Integrated Development Environment
  - MPLAB® IDE Software
- Compilers/Assemblers/Linkers
  - MPLAB C Compiler for Various Device Families
  - HI-TECH C® for Various Device Families
  - MPASM™ Assembler
  - MPLINK™ Object Linker/ MPLIB™ Object Librarian
  - MPLAB Assembler/Linker/Librarian for Various Device Families
- Simulators
  - MPLAB SIM Software Simulator
- Emulators
  - MPLAB REAL ICE™ In-Circuit Emulator
- In-Circuit Debuggers
  - MPLAB ICD 3
  - PICkit™ 3 Debug Express
- Device Programmers
  - PICkit™ 2 Programmer
  - MPLAB PM3 Device Programmer
- Low-Cost Demonstration/Development Boards, Evaluation Kits, and Starter Kits

31.1 MPLAB Integrated Development Environment Software

The MPLAB IDE software brings an ease of software development previously unseen in the 8/16/32-bit microcontroller market. The MPLAB IDE is a Windows® operating system-based application that contains:

- A single graphical interface to all debugging tools
  - Simulator
  - Programmer (sold separately)
  - In-Circuit Emulator (sold separately)
  - In-Circuit Debugger (sold separately)
- A full-featured editor with color-coded context
- A multiple project manager
- Customizable data windows with direct edit of contents
- High-level source code debugging
- Mouse over variable inspection
- Drag and drop variables from source to watch windows
- Extensive on-line help
- Integration of select third party tools, such as IAR C Compilers

The MPLAB IDE allows you to:

- Edit your source files (either C or assembly)
- One-touch compile or assemble, and download to emulator and simulator tools (automatically updates all project information)
- Debug using:
  - Source files (C or assembly)
  - Mixed C and assembly
  - Machine code

MPLAB IDE supports multiple debugging tools in a single development paradigm, from the cost-effective simulators, through low-cost in-circuit debuggers, to full-featured emulators. This eliminates the learning curve when upgrading to tools with increased flexibility and power.

31.2 MPLAB C Compilers for Various Device Families

The MPLAB C Compiler code development systems are complete ANSI C compilers for Microchip's PIC18, PIC24 and PIC32 families of microcontrollers and the dsPIC30 and dsPIC33 families of digital signal controllers. These compilers provide powerful integration capabilities, superior code optimization and ease of use.

For easy source level debugging, the compilers provide symbol information that is optimized to the MPLAB IDE debugger.

31.3 HI-TECH C for Various Device Families

The HI-TECH C Compiler code development systems are complete ANSI C compilers for Microchip's PIC family of microcontrollers and the dsPIC family of digital signal controllers. These compilers provide powerful integration capabilities, omniscient code generation and ease of use.

For easy source level debugging, the compilers provide symbol information that is optimized to the MPLAB IDE debugger.

The compilers include a macro assembler, linker, preprocessor, and one-step driver, and can run on multiple platforms.

31.4 MPASM Assembler

The MPASM Assembler is a full-featured, universal macro assembler for PIC10/12/16/18 MCUs.

The MPASM Assembler generates relocatable object files for the MPLINK Object Linker, Intel® standard HEX files, MAP files to detail memory usage and symbol reference, absolute LST files that contain source lines and generated machine code and COFF files for debugging.

The MPASM Assembler features include:

- Integration into MPLAB IDE projects
- User-defined macros to streamline assembly code
- Conditional assembly for multi-purpose source files
- Directives that allow complete control over the assembly process

31.5 MPLINK Object Linker/ MPLIB Object Librarian

The MPLINK Object Linker combines relocatable objects created by the MPASM Assembler and the MPLAB C18 C Compiler. It can link relocatable objects from precompiled libraries, using directives from a linker script.

The MPLIB Object Librarian manages the creation and modification of library files of precompiled code. When a routine from a library is called from a source file, only the modules that contain that routine will be linked in with the application. This allows large libraries to be used efficiently in many different applications.

The object linker/library features include:

- Efficient linking of single libraries instead of many smaller files
- Enhanced code maintainability by grouping related modules together
- Flexible creation of libraries with easy module listing, replacement, deletion and extraction

31.6 MPLAB Assembler, Linker and Librarian for Various Device Families

MPLAB Assembler produces relocatable machine code from symbolic assembly language for PIC24, PIC32 and dsPIC devices. MPLAB C Compiler uses the assembler to produce its object file. The assembler generates relocatable object files that can then be archived or linked with other relocatable object files and archives to create an executable file. Notable features of the assembler include:

- Support for the entire device instruction set
- Support for fixed-point and floating-point data
- Command line interface
- Rich directive set
- Flexible macro language
- MPLAB IDE compatibility

 © 2012 Microchip Technology Inc.

31.7 MPLAB SIM Software Simulator

The MPLAB SIM Software Simulator allows code development in a PC-hosted environment by simulating the PIC MCUs and dsPIC® DSCs on an instruction level. On any given instruction, the data areas can be examined or modified and stimuli can be applied from a comprehensive stimulus controller. Registers can be logged to files for further run-time analysis. The trace buffer and logic analyzer display extend the power of the simulator to record and track program execution, actions on I/O, most peripherals and internal registers.

The MPLAB SIM Software Simulator fully supports symbolic debugging using the MPLAB C Compilers, and the MPASM and MPLAB Assemblers. The software simulator offers the flexibility to develop and debug code outside of the hardware laboratory environment, making it an excellent, economical software development tool.

31.8 MPLAB REAL ICE In-Circuit Emulator System

MPLAB REAL ICE In-Circuit Emulator System is Microchip's next generation high-speed emulator for Microchip Flash DSC and MCU devices. It debugs and programs PIC® Flash MCUs and dsPIC® Flash DSCs with the easy-to-use, powerful graphical user interface of the MPLAB Integrated Development Environment (IDE), included with each kit.

The emulator is connected to the design engineer's PC using a high-speed USB 2.0 interface and is connected to the target with either a connector compatible with in-circuit debugger systems (RJ11) or with the new high-speed, noise tolerant, Low-Voltage Differential Signal (LVDS) interconnection (CAT5).

The emulator is field upgradable through future firmware downloads in MPLAB IDE. In upcoming releases of MPLAB IDE, new devices will be supported, and new features will be added. MPLAB REAL ICE offers significant advantages over competitive emulators including low-cost, full-speed emulation, run-time variable watches, trace analysis, complex breakpoints, a ruggedized probe interface and long (up to three meters) interconnection cables.

31.9 MPLAB ICD 3 In-Circuit Debugger System

MPLAB ICD 3 In-Circuit Debugger System is Microchip's most cost effective high-speed hardware debugger/programmer for Microchip Flash Digital Signal Controller (DSC) and microcontroller (MCU) devices. It debugs and programs PIC® Flash microcontrollers and dsPIC® DSCs with the powerful, yet easy-to-use graphical user interface of MPLAB Integrated Development Environment (IDE).

The MPLAB ICD 3 In-Circuit Debugger probe is connected to the design engineer's PC using a high-speed USB 2.0 interface and is connected to the target with a connector compatible with the MPLAB ICD 2 or MPLAB REAL ICE systems (RJ-11). MPLAB ICD 3 supports all MPLAB ICD 2 headers.

31.10 PICkit 3 In-Circuit Debugger/ Programmer and PICkit 3 Debug Express

The MPLAB PICkit 3 allows debugging and programming of PIC® and dsPIC® Flash microcontrollers at a most affordable price point using the powerful graphical user interface of the MPLAB Integrated Development Environment (IDE). The MPLAB PICkit 3 is connected to the design engineer's PC using a full speed USB interface and can be connected to the target via an Microchip debug (RJ-11) connector (compatible with MPLAB ICD 3 and MPLAB REAL ICE). The connector uses two device I/O pins and the reset line to implement in-circuit debugging and In-Circuit Serial Programming™.

The PICkit 3 Debug Express include the PICkit 3, demo board and microcontroller, hookup cables and CDROM with user's guide, lessons, tutorial, compiler and MPLAB IDE software.

31.11 PICkit 2 Development Programmer/Debugger and PICkit 2 Debug Express

The PICkit™ 2 Development Programmer/Debugger is a low-cost development tool with an easy to use interface for programming and debugging Microchip's Flash families of microcontrollers. The full featured Windows® programming interface supports baseline (PIC10F, PIC12F5xx, PIC16F5xx), midrange (PIC12F6xx, PIC16F), PIC18F, PIC24, dsPIC30, dsPIC33, and PIC32 families of 8-bit, 16-bit, and 32-bit microcontrollers, and many Microchip Serial EEPROM products. With Microchip's powerful MPLAB Integrated Development Environment (IDE) the PICkit™ 2 enables in-circuit debugging on most PIC® microcontrollers. In-Circuit-Debugging runs, halts and single steps the program while the PIC microcontroller is embedded in the application. When halted at a breakpoint, the file registers can be examined and modified.

The PICkit 2 Debug Express include the PICkit 2, demo board and microcontroller, hookup cables and CDROM with user's guide, lessons, tutorial, compiler and MPLAB IDE software.

31.12 MPLAB PM3 Device Programmer

The MPLAB PM3 Device Programmer is a universal, CE compliant device programmer with programmable voltage verification at V_{DDMIN} and V_{DDMAX} for maximum reliability. It features a large LCD display (128 x 64) for menus and error messages and a modular, detachable socket assembly to support various package types. The ICSP™ cable assembly is included as a standard item. In Stand-Alone mode, the MPLAB PM3 Device Programmer can read, verify and program PIC devices without a PC connection. It can also set code protection in this mode. The MPLAB PM3 connects to the host PC via an RS-232 or USB cable. The MPLAB PM3 has high-speed communications and optimized algorithms for quick programming of large memory devices and incorporates an MMC card for file storage and data applications.

31.13 Demonstration/Development Boards, Evaluation Kits, and Starter Kits

A wide variety of demonstration, development and evaluation boards for various PIC MCUs and dsPIC DSCs allows quick application development on fully functional systems. Most boards include prototyping areas for adding custom circuitry and provide application firmware and source code for examination and modification.

The boards support a variety of features, including LEDs, temperature sensors, switches, speakers, RS-232 interfaces, LCD displays, potentiometers and additional EEPROM memory.

The demonstration and development boards can be used in teaching environments, for prototyping custom circuits and for learning about various microcontroller applications.

In addition to the PICDEM™ and dsPICDEM™ demonstration/development board series of circuits, Microchip has a line of evaluation kits and demonstration software for analog filter design, KEELOQ® security ICs, CAN, IrDA®, PowerSmart battery management, SEEVAL® evaluation system, Sigma-Delta ADC, flow rate sensing, plus many more.

Also available are starter kits that contain everything needed to experience the specified device. This usually includes a single application and debug capability, all on one board.

Check the Microchip web page (www.microchip.com) for the complete list of demonstration, development and evaluation kits.

 © 2012 Microchip Technology Inc.

32.0 PACKAGING INFORMATION

32.1 Package Marking Information

14-Lead PDIP (300 mil)

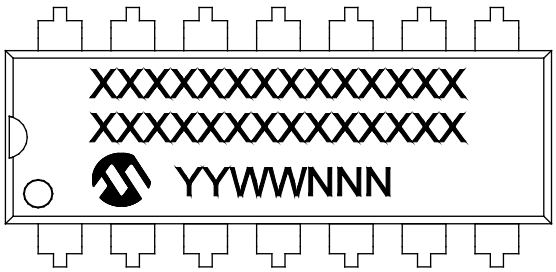

Example

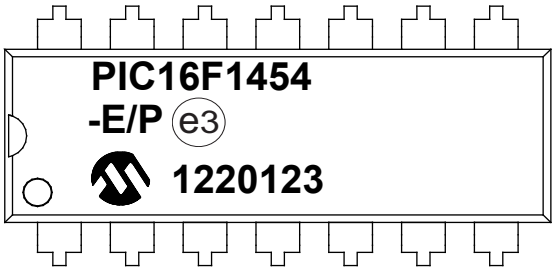

14-Lead SOIC (3.90 mm)

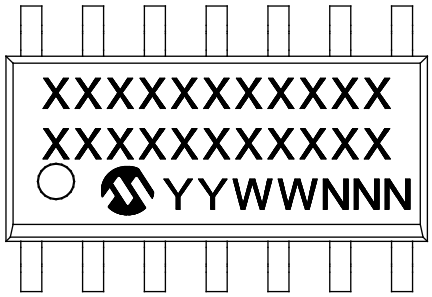

Example

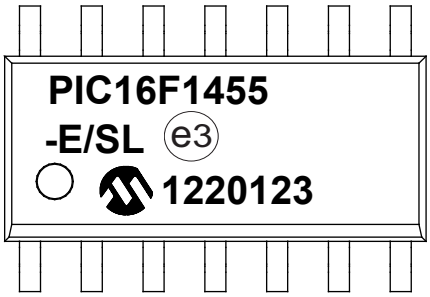

Legend:	XX...X	Customer-specific information
	Y	Year code (last digit of calendar year)
	YY	Year code (last 2 digits of calendar year)
	WW	Week code (week of January 1 is week ‘01’)
	NNN	Alphanumeric traceability code
	e3	Pb-free JEDEC designator for Matte Tin (Sn)
	*	This package is Pb-free. The Pb-free JEDEC designator (e3) can be found on the outer packaging for this package.
Note:	In the event the full Microchip part number cannot be marked on one line, it will be carried over to the next line, thus limiting the number of available characters for customer-specific information.	

* Standard PICmicro® device marking consists of Microchip part number, year code, week code and traceability code. For PICmicro device marking beyond this, certain price adders apply. Please check with your Microchip Sales Office. For QTP devices, any special marking adders are included in QTP price.

14-Lead TSSOP (4.4 mm)

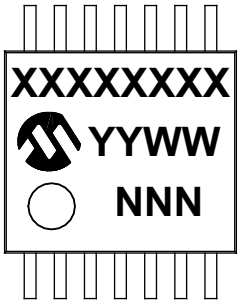

Example

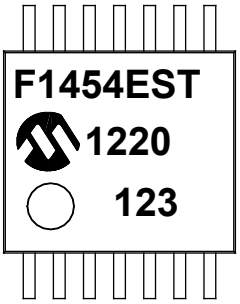

16-Lead QFN (4x4x0.9 mm)

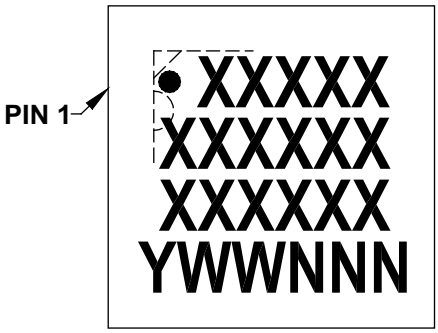

Example

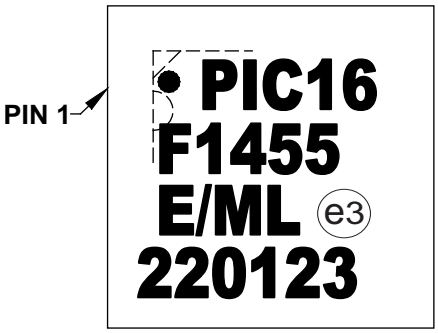

20-Lead PDIP (300 mil)

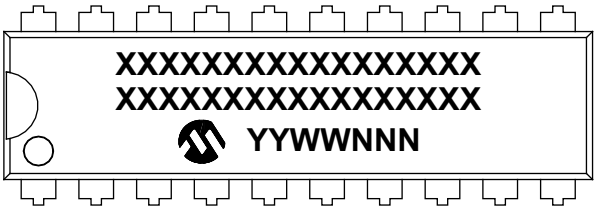

Example

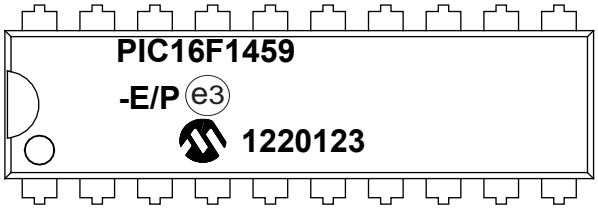

 © 2012 Microchip Technology Inc.

20-Lead SOIC (7.50 mm)

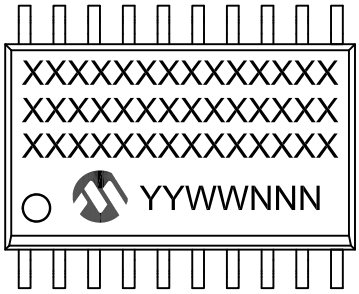

Example

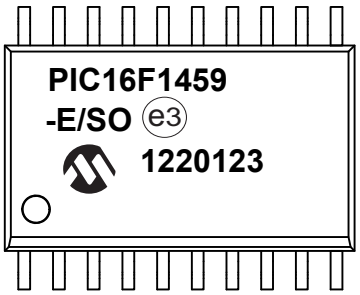

20-Lead SSOP (5.30 mm)

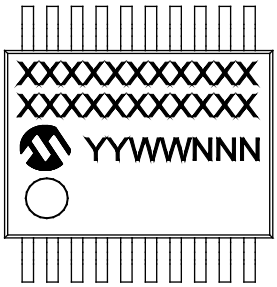

Example

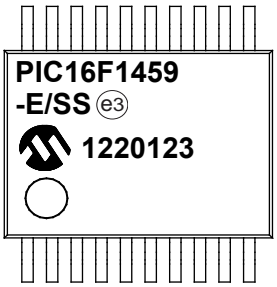

20-Lead QFN (4x4x0.9 mm)

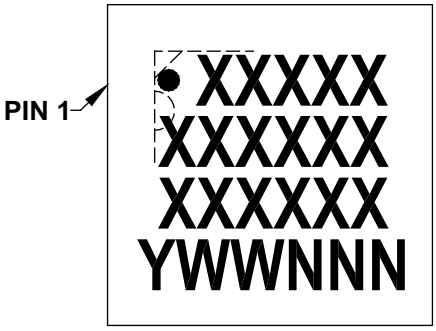

Example

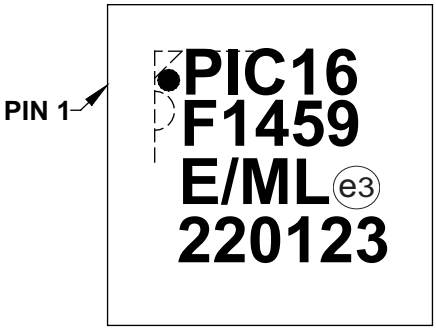

32.2 Package Details

The following sections give the technical details of the packages.

14-Lead Plastic Dual In-Line (P) – 300 mil Body [PDIP]

Note: For the most current package drawings, please see the Microchip Packaging Specification located at http://www.microchip.com/packaging

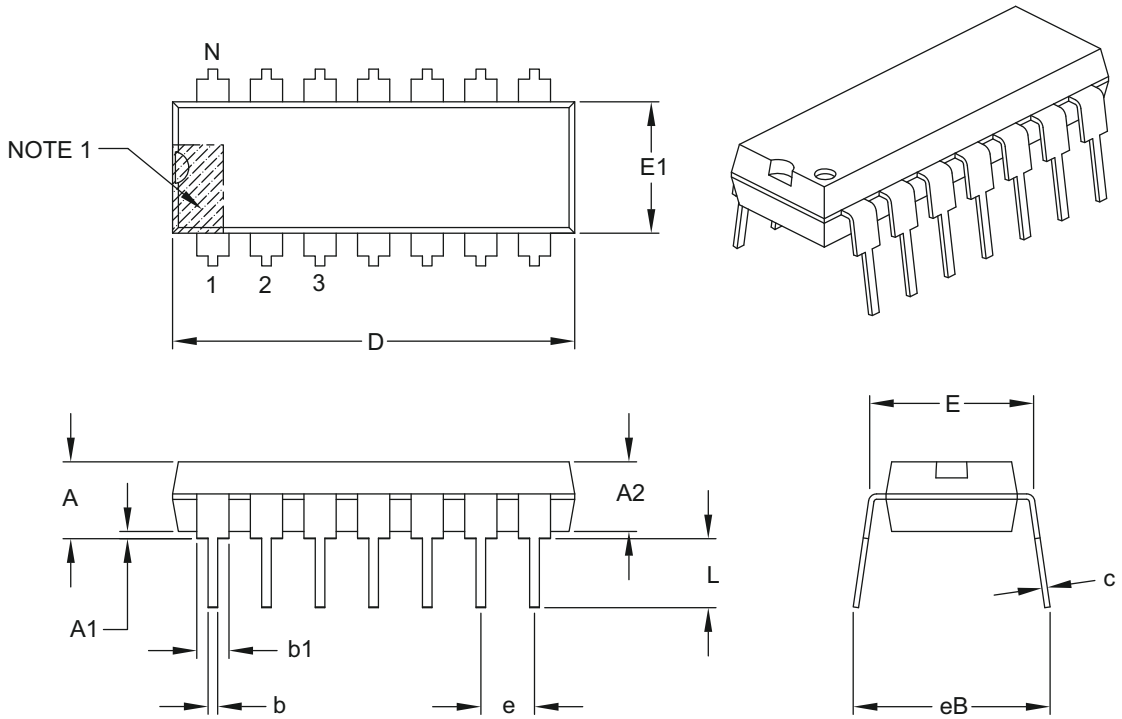

Units		INCHES		
Dimension Limits		MIN	NOM	MAX
Number of Pins	N	14		
Pitch	e	.100 BSC		
Top to Seating Plane	A	–	–	.210
Molded Package Thickness	A2	.115	.130	.195
Base to Seating Plane	A1	.015	–	–
Shoulder to Shoulder Width	E	.290	.310	.325
Molded Package Width	E1	.240	.250	.280
Overall Length	D	.735	.750	.775
Tip to Seating Plane	L	.115	.130	.150
Lead Thickness	c	.008	.010	.015
Upper Lead Width	b1	.045	.060	.070
Lower Lead Width	b	.014	.018	.022
Overall Row Spacing §	eB	–	–	.430

Notes:

1. Pin 1 visual index feature may vary, but must be located with the hatched area.
2. § Significant Characteristic.
3. Dimensions D and E1 do not include mold flash or protrusions. Mold flash or protrusions shall not exceed .010" per side.
4. Dimensioning and tolerancing per ASME Y14.5M.
   BSC: Basic Dimension. Theoretically exact value shown without tolerances.

Microchip Technology Drawing C04-005B

 © 2012 Microchip Technology Inc.

14-Lead Plastic Small Outline (SL) - Narrow, 3.90 mm Body [SOIC]

Note: For the most current package drawings, please see the Microchip Packaging Specification located at http://www.microchip.com/packaging

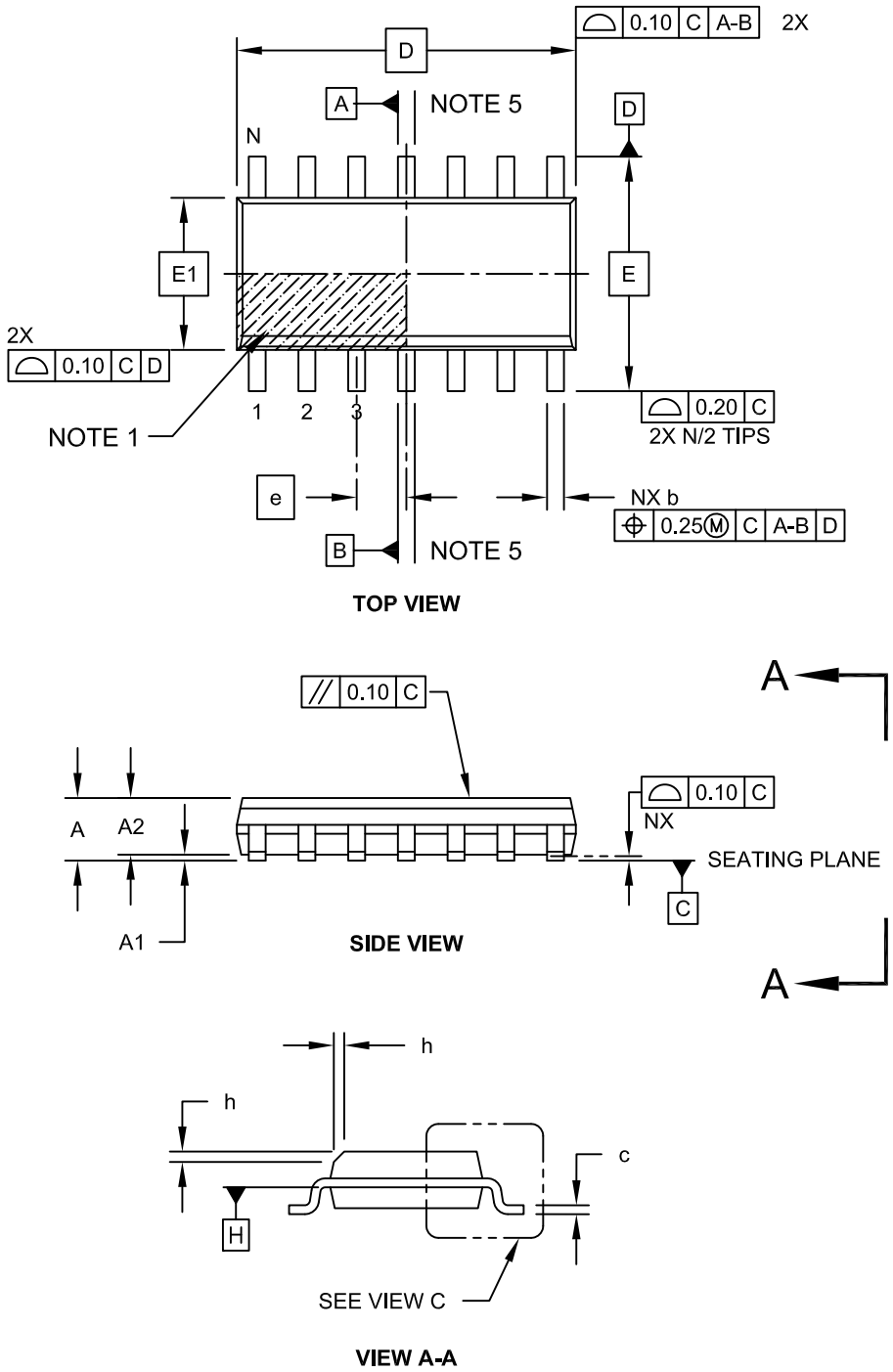

Microchip Technology Drawing No. C04-065C Sheet 1 of 2

14-Lead Plastic Small Outline (SL) - Narrow, 3.90 mm Body [SOIC]

Note: For the most current package drawings, please see the Microchip Packaging Specification located at http://www.microchip.com/packaging

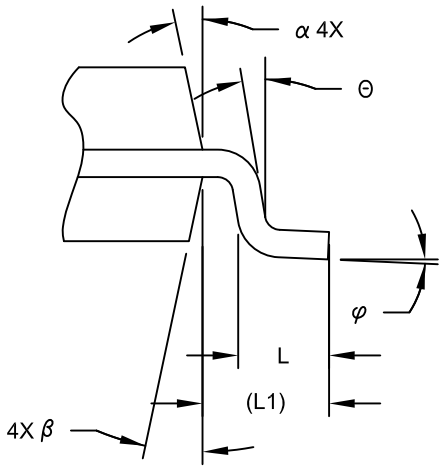

VIEW C

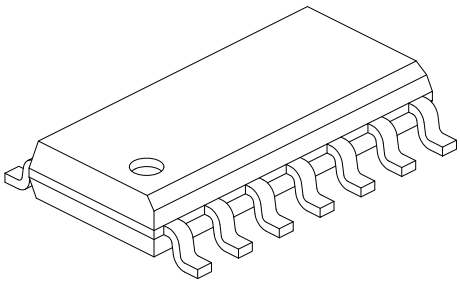

Units		MILLIMETERS		
Dimension Limits		MIN	NOM	MAX
Number of Pins	N	14		
Pitch	e	1.27 BSC		
Overall Height	A	-	-	1.75
Molded Package Thickness	A2	1.25	-	-
Standoff §	A1	0.10	-	0.25
Overall Width	E	6.00 BSC		
Molded Package Width	E1	3.90 BSC		
Overall Length	D	8.65 BSC		
Chamfer (Optional)	h	0.25	-	0.50
Foot Length	L	0.40	-	1.27
Footprint	L1	1.04 REF		
Lead Angle	Θ	0°	-	-
Foot Angle	φ	0°	-	8°
Lead Thickness	c	0.10	-	0.25
Lead Width	b	0.31	-	0.51
Mold Draft Angle Top	α	5°	-	15°
Mold Draft Angle Bottom	β	5°	-	15°

Notes:

1. Pin 1 visual index feature may vary, but must be located within the hatched area.
2. § Significant Characteristic
3. Dimension D does not include mold flash, protrusions or gate burrs, which shall not exceed 0.15 mm per end. Dimension E1 does not include interlead flash or protrusion, which shall not exceed 0.25 mm per side.
4. Dimensioning and tolerancing per ASME Y14.5M
   BSC: Basic Dimension. Theoretically exact value shown without tolerances.
   REF: Reference Dimension, usually without tolerance, for information purposes only.
5. Datums A & B to be determined at Datum H.

Microchip Technology Drawing No. C04-065C Sheet 2 of 2

 © 2012 Microchip Technology Inc.

14-Lead Plastic Thin Shrink Small Outline (ST) - 4.4 mm Body [TSSOP]

Note:	For the most current package drawings, please see the Microchip Packaging Specification located at http://www.microchip.com/packaging

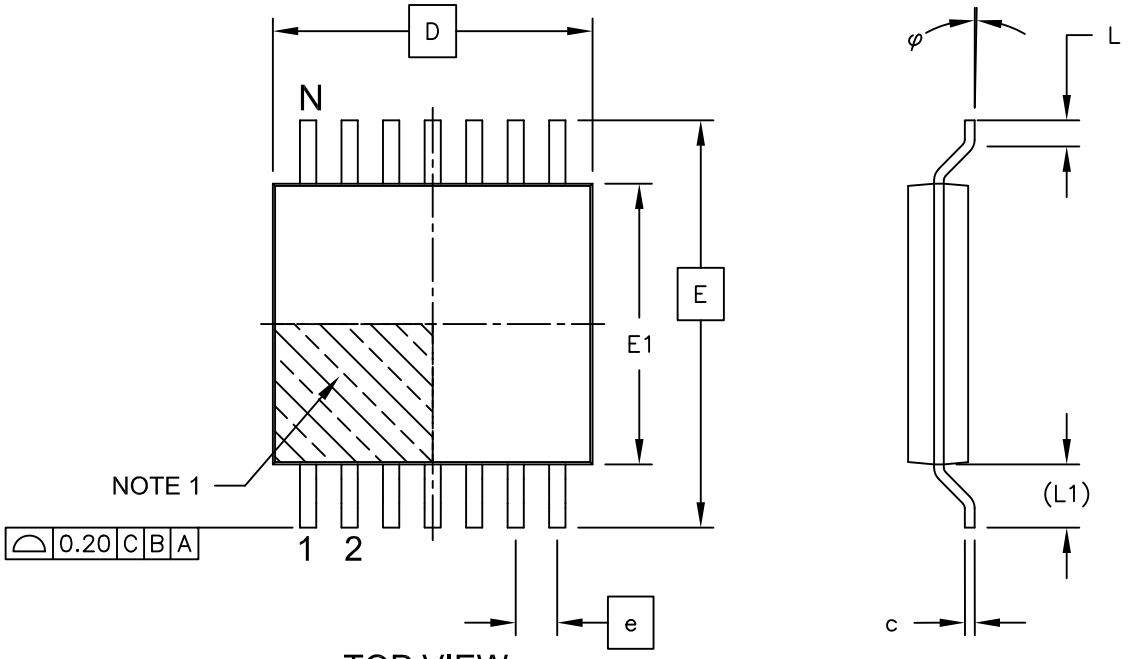

TOP VIEW

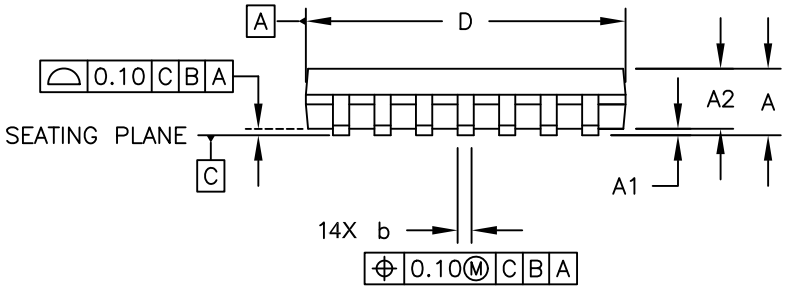

SIDE VIEW

Microchip Technology Drawing C04-087C Sheet 1 of 2

14-Lead Plastic Thin Shrink Small Outline (ST) - 4.4 mm Body [TSSOP]

Note: For the most current package drawings, please see the Microchip Packaging Specification located at http://www.microchip.com/packaging

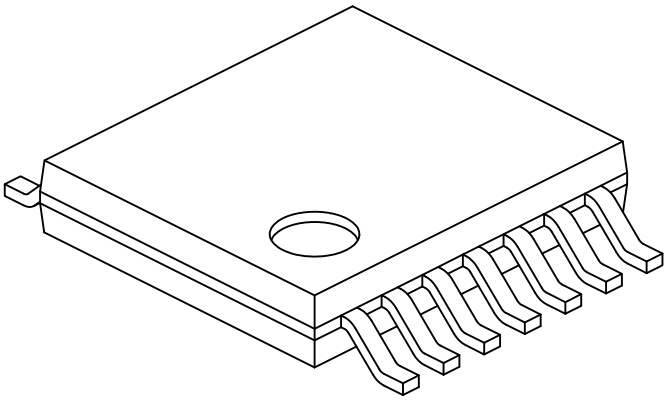

Units		MILLIMETERS		
Dimension Limits		MIN	NOM	MAX
Number of Pins	N	14		
Pitch	e	0.65 BSC		
Overall Height	A	-	-	1.20
Molded Package Thickness	A2	0.80	1.00	1.05
Standoff	A1	0.05	-	0.15
Overall Width	E	6.40 BSC		
Molded Package Width	E1	4.30	4.40	4.50
Molded Package Length	D	4.90	5.00	5.10
Foot Length	L	0.45	0.60	0.75
Footprint	(L1)	1.00 REF		
Foot Angle	φ	0°	-	8°
Lead Thickness	c	0.09	-	0.20
Lead Width	b	0.19	-	0.30

Notes:

1. Pin 1 visual index feature may vary, but must be located within the hatched area.
2. Dimensions D and E1 do not include mold flash or protrusions. Mold flash or protrusions shall not exceed 0.15mm per side.
3. Dimensioning and tolerancing per ASME Y14.5M

   BSC: Basic Dimension. Theoretically exact value shown without tolerances.

   REF: Reference Dimension, usually without tolerance, for information purposes only.

Microchip Technology Drawing No. C04-087C Sheet 2 of 2

 © 2012 Microchip Technology Inc.

14-Lead Plastic Thin Shrink Small Outline (ST) - 4.4 mm Body [TSSOP]

Note: For the most current package drawings, please see the Microchip Packaging Specification located at http://www.microchip.com/packaging

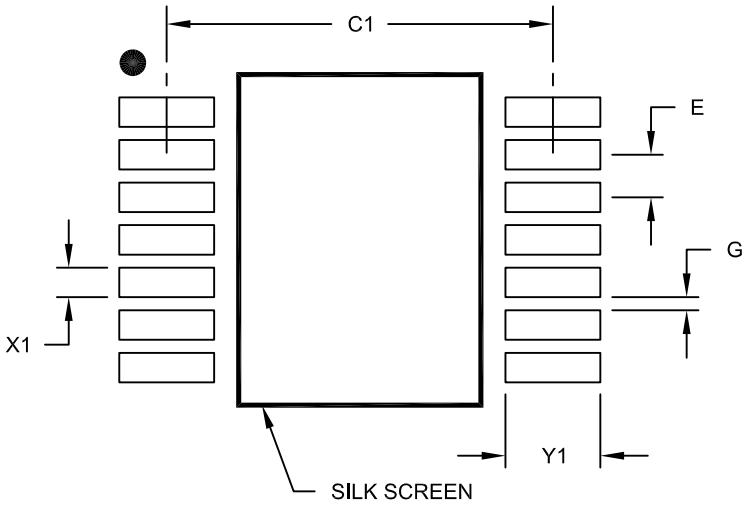

RECOMMENDED LAND PATTERN

Units		MILLIMETERS		
Dimension Limits		MIN	NOM	MAX
Contact Pitch	E		0.65 BSC	
Contact Pad Spacing	C1		5.90	
Contact Pad Width (X14)	X1			0.45
Contact Pad Length (X14)	Y1			1.45
Distance Between Pads	G	0.20		

Notes:

1. Dimensioning and tolerancing per ASME Y14.5M

BSC: Basic Dimension. Theoretically exact value shown without tolerances.

Microchip Technology Drawing No. C04-2087A

16-Lead Plastic Quad Flat, No Lead Package (ML) – 4x4x0.9 mm Body [QFN]

Note: For the most current package drawings, please see the Microchip Packaging Specification located at http://www.microchip.com/packaging

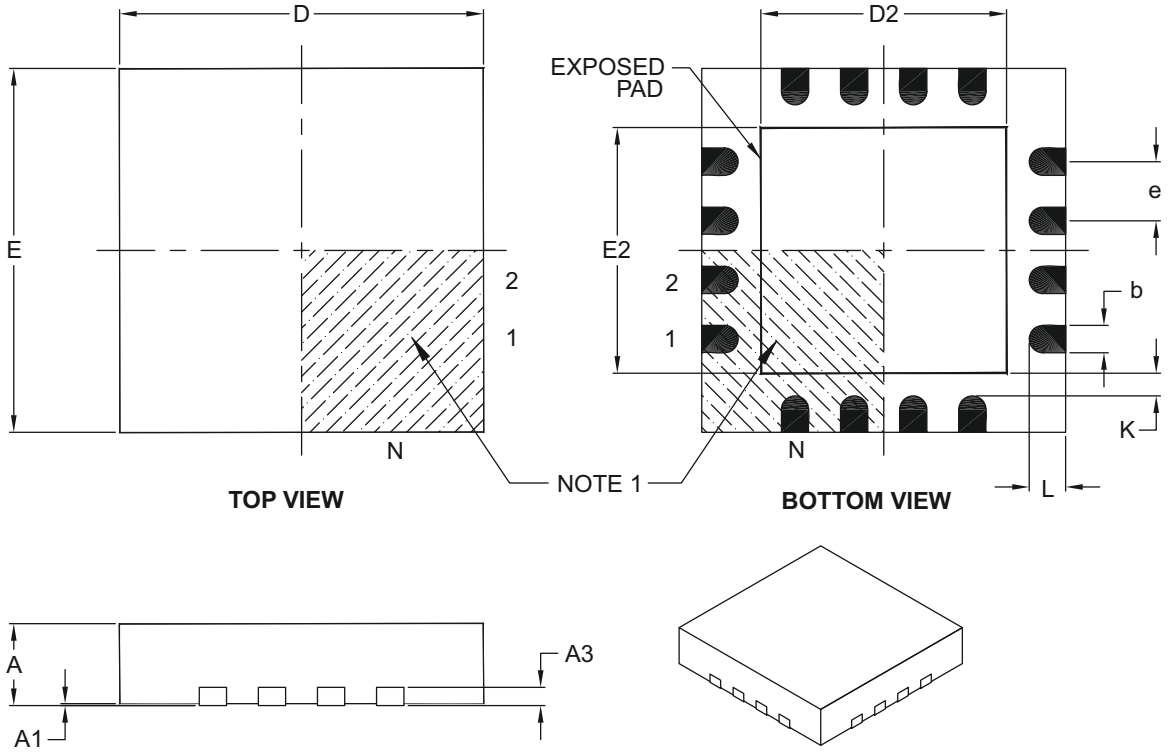

Units		MILLIMETERS		
Dimension Limits		MIN	NOM	MAX
Number of Pins	N	16		
Pitch	e	0.65 BSC		
Overall Height	A	0.80	0.90	1.00
Standoff	A1	0.00	0.02	0.05
Contact Thickness	A3	0.20 REF		
Overall Width	E	4.00 BSC		
Exposed Pad Width	E2	2.50	2.65	2.80
Overall Length	D	4.00 BSC		
Exposed Pad Length	D2	2.50	2.65	2.80
Contact Width	b	0.25	0.30	0.35
Contact Length	L	0.30	0.40	0.50
Contact-to-Exposed Pad	K	0.20	–	–

Notes:

1. Pin 1 visual index feature may vary, but must be located within the hatched area.
2. Package is saw singulated.
3. Dimensioning and tolerancing per ASME Y14.5M.
   BSC: Basic Dimension. Theoretically exact value shown without tolerances.
   REF: Reference Dimension, usually without tolerance, for information purposes only.

Microchip Technology Drawing C04-127B

 © 2012 Microchip Technology Inc.

16-Lead Plastic Quad Flat, No Lead Package (ML) - 4x4x0.9mm Body [QFN]

Note: For the most current package drawings, please see the Microchip Packaging Specification located at http://www.microchip.com/packaging

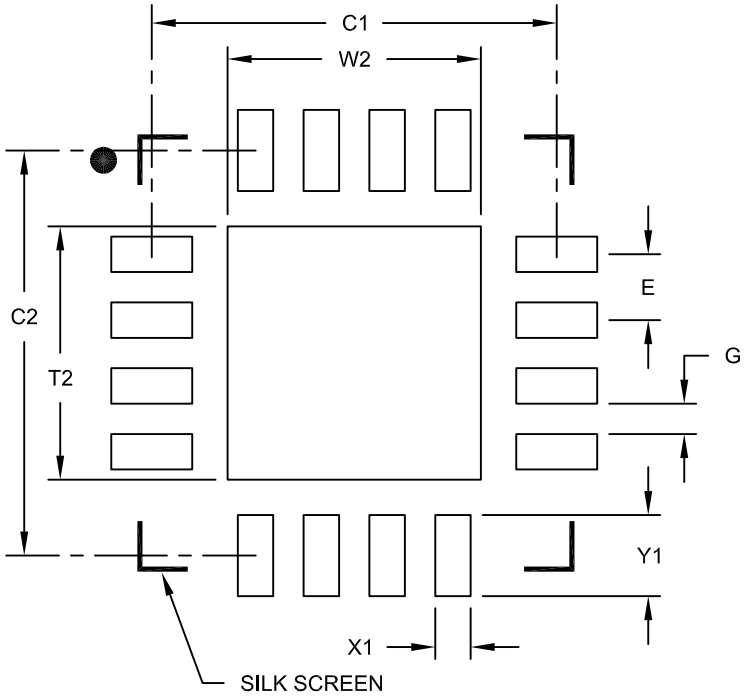

RECOMMENDED LAND PATTERN

Units		MILLIMETERS		
Dimension Limits		MIN	NOM	MAX
Contact Pitch	E	0.65 BSC		
Optional Center Pad Width	W2			2.50
Optional Center Pad Length	T2			2.50
Contact Pad Spacing	C1		4.00	
Contact Pad Spacing	C2		4.00	
Contact Pad Width (X16)	X1			0.35
Contact Pad Length (X16)	Y1			0.80
Distance Between Pads	G	0.30		

Notes:

1. Dimensioning and tolerancing per ASME Y14.5M

BSC: Basic Dimension. Theoretically exact value shown without tolerances.

Microchip Technology Drawing No. C04-2127A

20-Lead Plastic Dual In-Line (P) – 300 mil Body [PDIP]

Note: For the most current package drawings, please see the Microchip Packaging Specification located at http://www.microchip.com/packaging

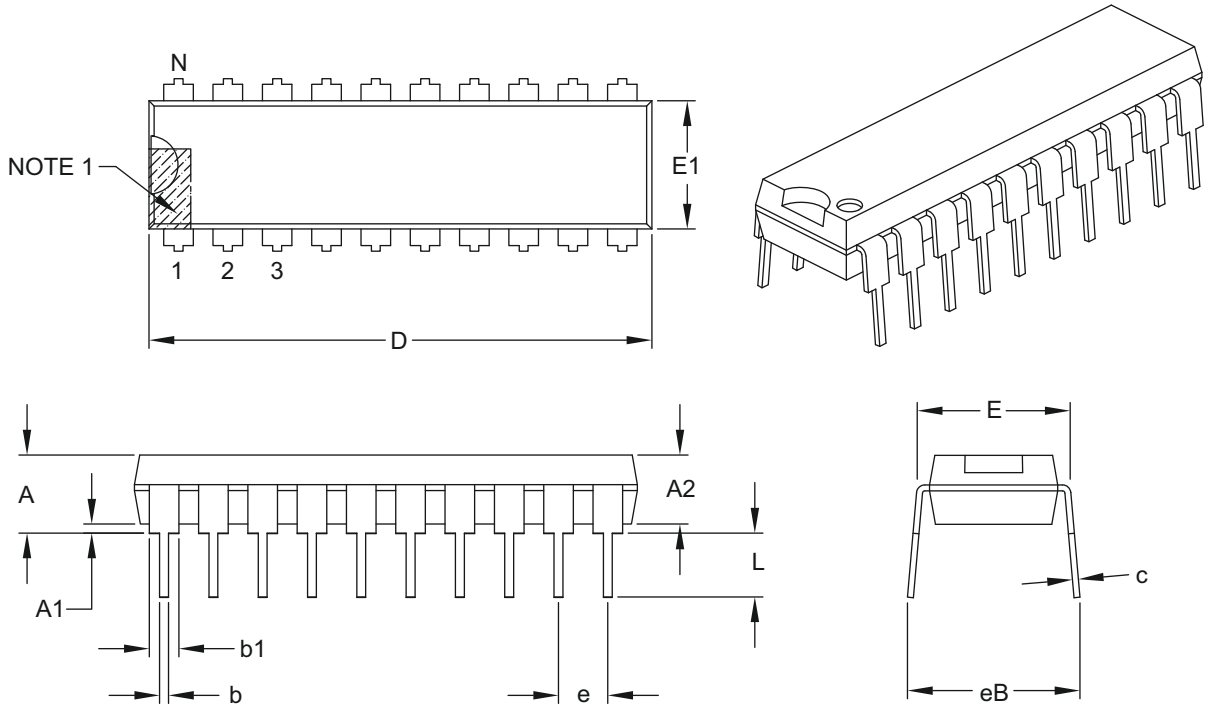

Units		INCHES		
Dimension Limits		MIN	NOM	MAX
Number of Pins	N	20		
Pitch	e	.100 BSC		
Top to Seating Plane	A	–	–	.210
Molded Package Thickness	A2	.115	.130	.195
Base to Seating Plane	A1	.015	–	–
Shoulder to Shoulder Width	E	.300	.310	.325
Molded Package Width	E1	.240	.250	.280
Overall Length	D	.980	1.030	1.060
Tip to Seating Plane	L	.115	.130	.150
Lead Thickness	c	.008	.010	.015
Upper Lead Width	b1	.045	.060	.070
Lower Lead Width	b	.014	.018	.022
Overall Row Spacing §	eB	–	–	.430

Notes:
1. Pin 1 visual index feature may vary, but must be located within the hatched area.
2. § Significant Characteristic.
3. Dimensions D and E1 do not include mold flash or protrusions. Mold flash or protrusions shall not exceed .010" per side.
4. Dimensioning and tolerancing per ASME Y14.5M.

   BSC: Basic Dimension. Theoretically exact value shown without tolerances.

Microchip Technology Drawing C04-019B

 © 2012 Microchip Technology Inc.

20-Lead Plastic Small Outline (SO) - Wide, 7.50 mm Body [SOIC]

Note: For the most current package drawings, please see the Microchip Packaging Specification located at http://www.microchip.com/packaging

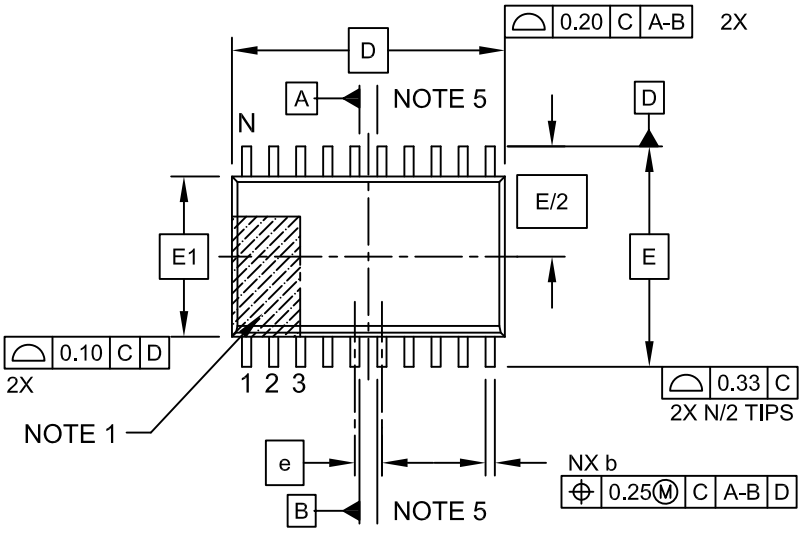

TOP VIEW

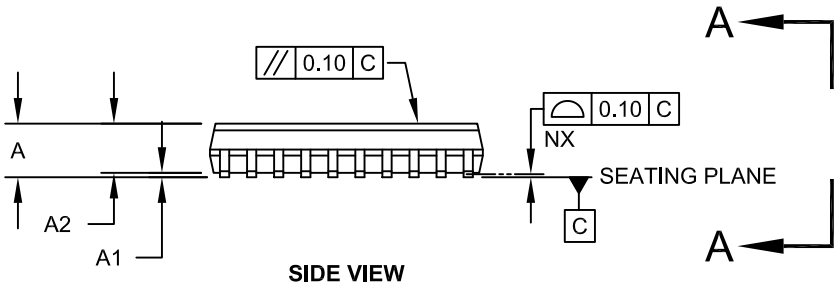

SIDE VIEW

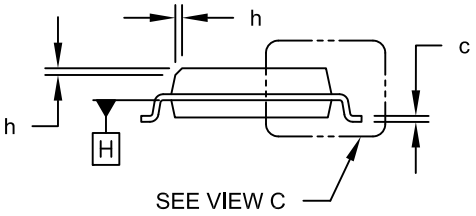

VIEW A-A

Microchip Technology Drawing C04-094C Sheet 1 of 2

20-Lead Plastic Small Outline (SO) - Wide, 7.50 mm Body [SOIC]

Note: For the most current package drawings, please see the Microchip Packaging Specification located at http://www.microchip.com/packaging

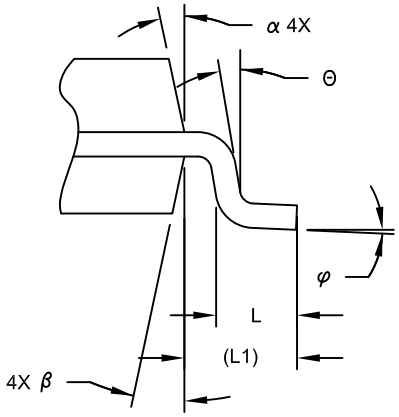

VIEW C

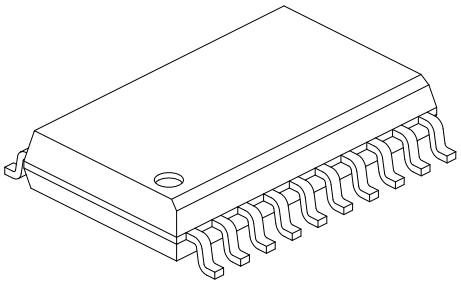

Units		MILLIMETERS		
Dimension Limits		MIN	NOM	MAX
Number of Pins	N	20		
Pitch	e	1.27 BSC		
Overall Height	A	-	-	2.65
Molded Package Thickness	A2	2.05	-	-
Standoff §	A1	0.10	-	0.30
Overall Width	E	10.30 BSC		
Molded Package Width	E1	7.50 BSC		
Overall Length	D	12.80 BSC		
Chamfer (Optional)	h	0.25	-	0.75
Foot Length	L	0.40	-	1.27
Footprint	L1	1.40 REF		
Lead Angle	Θ	0°	-	-
Foot Angle	φ	0°	-	8°
Lead Thickness	c	0.20	-	0.33
Lead Width	b	0.31	-	0.51
Mold Draft Angle Top	α	5°	-	15°
Mold Draft Angle Bottom	β	5°	-	15°

Notes:

1. Pin 1 visual index feature may vary, but must be located within the hatched area.
2. § Significant Characteristic
3. Dimension D does not include mold flash, protrusions or gate burrs, which shall not exceed 0.15 mm per end. Dimension E1 does not include interlead flash or protrusion, which shall not exceed 0.25 mm per side.
4. Dimensioning and tolerancing per ASME Y14.5M
   BSC: Basic Dimension. Theoretically exact value shown without tolerances.
   REF: Reference Dimension, usually without tolerance, for information purposes only.
5. Datums A & B to be determined at Datum H.

Microchip Technology Drawing No. C04-094C Sheet 2 of 2

 © 2012 Microchip Technology Inc.

20-Lead Plastic Shrink Small Outline (SS) – 5.30 mm Body [SSOP]

Note: For the most current package drawings, please see the Microchip Packaging Specification located at http://www.microchip.com/packaging

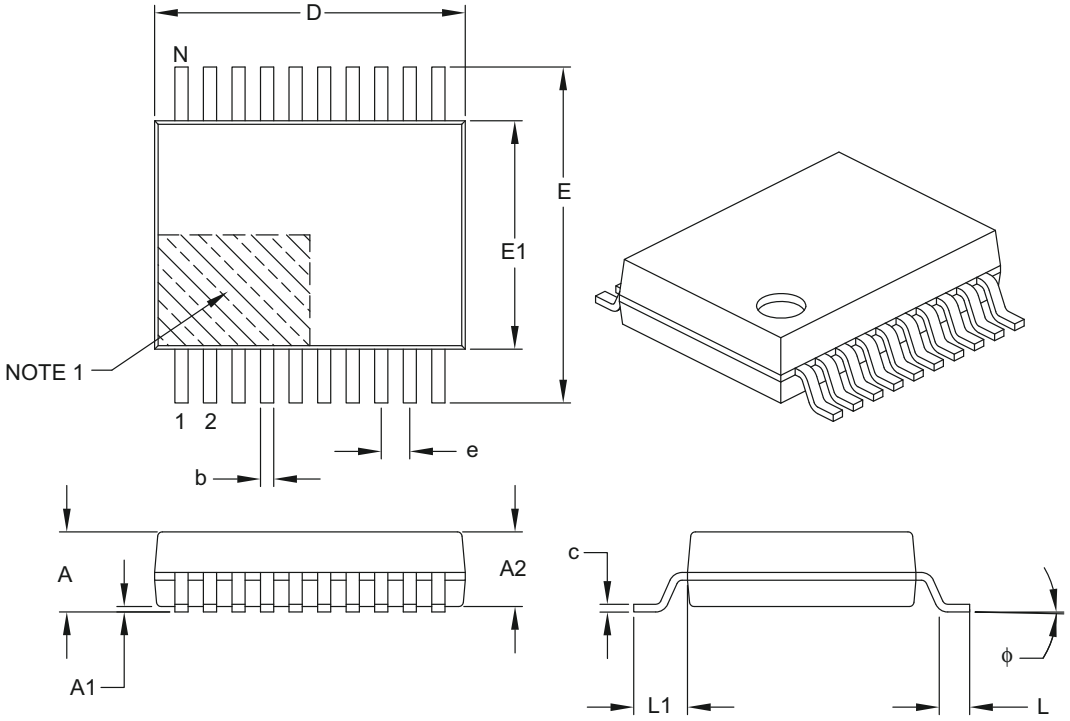

Units		MILLIMETERS		
Dimension Limits		MIN	NOM	MAX
Number of Pins	N	20		
Pitch	e	0.65 BSC		
Overall Height	A	–	–	2.00
Molded Package Thickness	A2	1.65	1.75	1.85
Standoff	A1	0.05	–	–
Overall Width	E	7.40	7.80	8.20
Molded Package Width	E1	5.00	5.30	5.60
Overall Length	D	6.90	7.20	7.50
Foot Length	L	0.55	0.75	0.95
Footprint	L1	1.25 REF		
Lead Thickness	c	0.09	–	0.25
Foot Angle	ϕ	0°	4°	8°
Lead Width	b	0.22	–	0.38

Notes:

1. Pin 1 visual index feature may vary, but must be located within the hatched area.
2. Dimensions D and E1 do not include mold flash or protrusions. Mold flash or protrusions shall not exceed 0.20 mm per side.
3. Dimensioning and tolerancing per ASME Y14.5M.
   BSC: Basic Dimension. Theoretically exact value shown without tolerances.
   REF: Reference Dimension, usually without tolerance, for information purposes only.

Microchip Technology Drawing C04-072B

20-Lead Plastic Shrink Small Outline (SS) - 5.30 mm Body [SSOP]

Note: For the most current package drawings, please see the Microchip Packaging Specification located at http://www.microchip.com/packaging

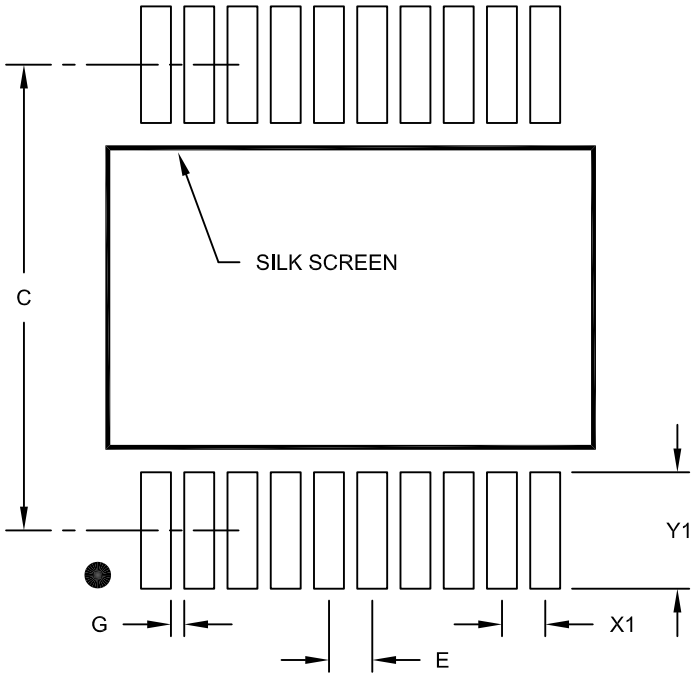

RECOMMENDED LAND PATTERN

Units		MILLIMETERS		
Dimension Limits		MIN	NOM	MAX
Contact Pitch	E		0.65 BSC	
Contact Pad Spacing	C		7.20	
Contact Pad Width (X20)	X1			0.45
Contact Pad Length (X20)	Y1			1.75
Distance Between Pads	G	0.20		

Notes:

1. Dimensioning and tolerancing per ASME Y14.5M

BSC: Basic Dimension. Theoretically exact value shown without tolerances.

Microchip Technology Drawing No. C04-2072A

 © 2012 Microchip Technology Inc.

20-Lead Plastic Quad Flat, No Lead Package (ML) – 4x4x0.9 mm Body [QFN]

Note: For the most current package drawings, please see the Microchip Packaging Specification located at http://www.microchip.com/packaging

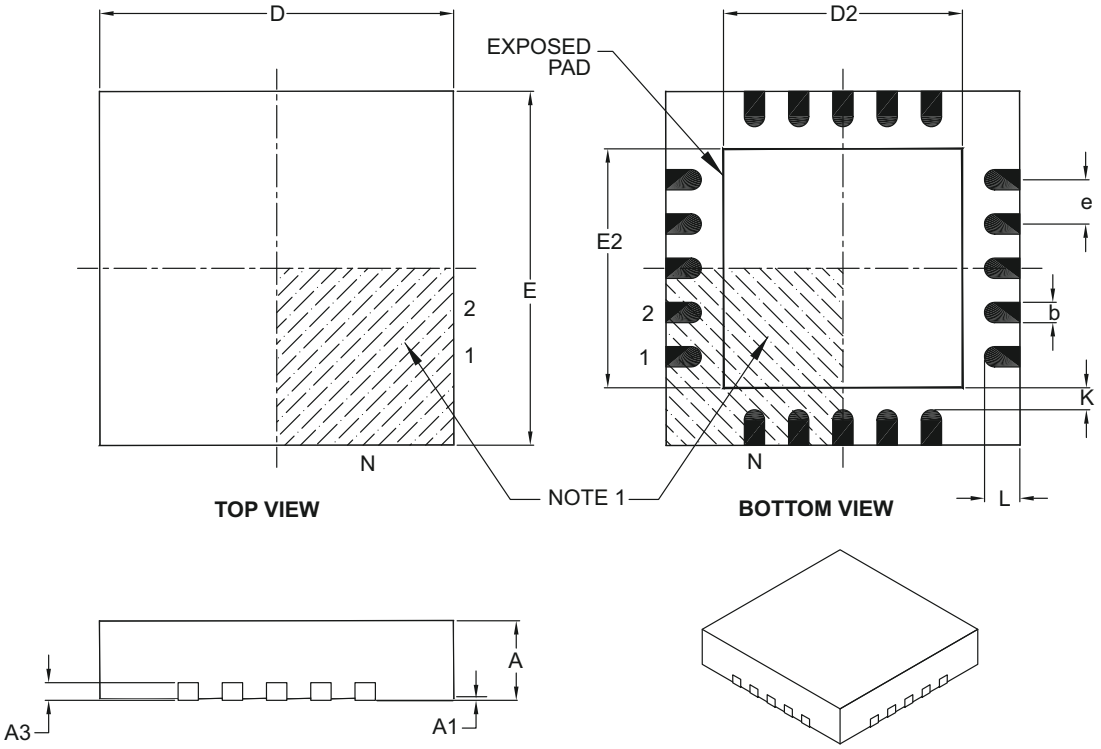

Units		MILLIMETERS		
Dimension Limits		MIN	NOM	MAX
Number of Pins	N	20		
Pitch	e	0.50 BSC		
Overall Height	A	0.80	0.90	1.00
Standoff	A1	0.00	0.02	0.05
Contact Thickness	A3	0.20 REF		
Overall Width	E	4.00 BSC		
Exposed Pad Width	E2	2.60	2.70	2.80
Overall Length	D	4.00 BSC		
Exposed Pad Length	D2	2.60	2.70	2.80
Contact Width	b	0.18	0.25	0.30
Contact Length	L	0.30	0.40	0.50
Contact-to-Exposed Pad	K	0.20	–	–

Notes:

1. Pin 1 visual index feature may vary, but must be located within the hatched area.
2. Package is saw singulated.
3. Dimensioning and tolerancing per ASME Y14.5M.

   BSC: Basic Dimension. Theoretically exact value shown without tolerances.
   REF: Reference Dimension, usually without tolerance, for information purposes only.

Microchip Technology Drawing C04-126B

20-Lead Plastic Quad Flat, No Lead Package (ML) - 4x4 mm Body [QFN]
With 0.40 mm Contact Length

Note: For the most current package drawings, please see the Microchip Packaging Specification located at http://www.microchip.com/packaging

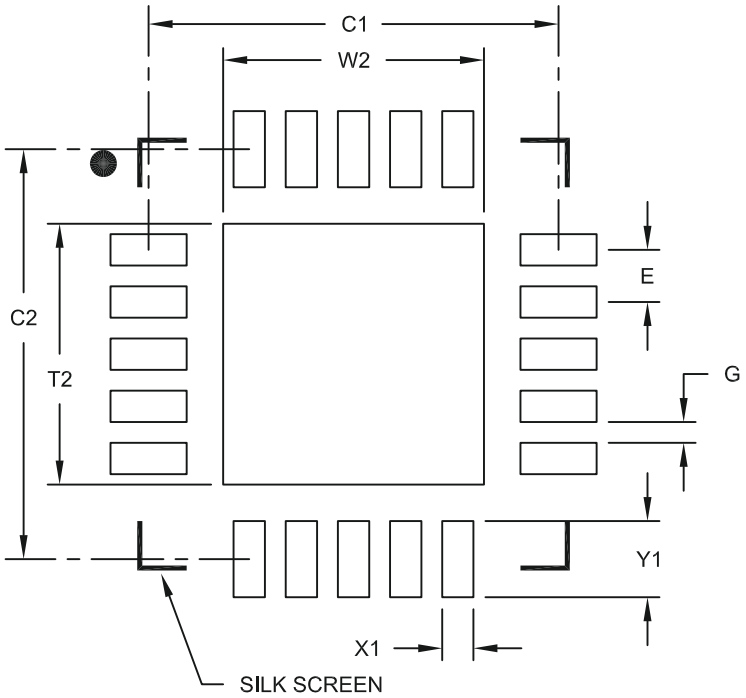

RECOMMENDED LAND PATTERN

Units		MILLIMETERS		
Dimension Limits		MIN	NOM	MAX
Contact Pitch	E		0.50 BSC	
Optional Center Pad Width	W2			2.50
Optional Center Pad Length	T2			2.50
Contact Pad Spacing	C1		3.93	
Contact Pad Spacing	C2		3.93	
Contact Pad Width	X1			0.30
Contact Pad Length	Y1			0.73
Distance Between Pads	G	0.20		

Notes:

1. Dimensioning and tolerancing per ASME Y14.5M
   BSC: Basic Dimension. Theoretically exact value shown without tolerances.

Microchip Technology Drawing No. C04-2126A

 © 2012 Microchip Technology Inc.

APPENDIX A: DATA SHEET REVISION HISTORY

Revision A (06/2012)

Initial release.

NOTES:

 © 2012 Microchip Technology Inc.

INDEX

A

A/D
Specifications ... 371, 372
Absolute Maximum Ratings ... 353
AC Characteristics
Industrial and Extended ... 367
Load Conditions ... 366
ACKSTAT ... 238
ACKSTAT Status Flag ... 238
ADC ... 153
Acquisition Requirements ... 165
Associated registers ... 167
Block Diagram ... 154
Calculating Acquisition Time ... 165
Channel Selection ... 155
Configuration ... 155
Configuring Interrupt ... 159
Conversion Clock ... 155
Conversion Procedure ... 159
Internal Sampling Switch (RSS) Impedance ... 165
Interrupts ... 157
Operation ... 158
Operation During Sleep ... 158
Port Configuration ... 155
Reference Voltage (VREF) ... 155
Source Impedance ... 165
Starting an A/D Conversion ... 157
ADCON0 Register ... 38, 160
ADCON1 Register ... 38, 161
ADCON2 Register ... 162
ADDFSR ... 343
ADDWFC ... 343
ADRESH Register ... 38
ADRESH Register (ADFM = 0) ... 163
ADRESH Register (ADFM = 1) ... 164
ADRESL Register (ADFM = 0) ... 163
ADRESL Register (ADFM = 1) ... 164
Alternate Pin Function ... 130
Analog-to-Digital Converter. *See* ADC
ANSELA Register ... 133
ANSELB Register ... 137
ANSELC Register ... 141
APFCON Register ... 130
Assembler
MPASM Assembler ... 386
Automatic Context Saving ... 95

B

Bank 10 ... 41
Bank 11 ... 41
Bank 12 ... 41
Bank 13 ... 41
Bank 14-28 ... 41
Bank 2 ... 39
Bank 3 ... 39
Bank 30 ... 42
Bank 31 ... 43
Bank 4 ... 40
Bank 5 ... 40
Bank 6 ... 40
Bank 7 ... 40
Bank 8 ... 40
Bank 9 ... 40
BAUDCON Register ... 269
BF ... 238, 240
BF Status Flag ... 238, 240
Block Diagrams
ADC ... 154
ADC Transfer Function ... 166
Analog Input Model ... 166, 178
Clock Source ... 58
Comparator ... 174
Crystal Operation ... 60, 61
Digital-to-Analog Converter (DAC) ... 170
EUSART Receive ... 258
EUSART Transmit ... 257
External RC Mode ... 62
Fail-Safe Clock Monitor (FSCM) ... 71
Generic I/O Port ... 129
Interrupt Logic ... 91
On-Chip Reset Circuit ... 79
PIC16(L)F1454/5/9 ... 14
PIC16C74 ... 5, 6
PIC16C74A ... 5, 6
PWM ... 287
Resonator Operation ... 60
Self Tuning ... 73
Timer0 ... 183
Timer1 ... 187
Timer1 Gate ... 192, 193, 194
Timer2 ... 199
USB Interrupt Logic ... 318
USB Peripheral and Options ... 309
Voltage Reference ... 149
Voltage Reference Output Buffer Example ... 170
BORCON Register ... 81
BRA ... 344
Break Character (12-bit) Transmit and Receive ... 278
Brown-out Reset (BOR) ... 81
Specifications ... 370
Timing and Characteristics ... 369

C

C Compilers
MPLAB C18 ... 386
CALL ... 345
CALLW ... 345
CLKRCON Register ... 88
Clock Accuracy with Asynchronous Operation ... 266
Clock Sources
External Modes ... 59
EC ... 59
HS ... 59
LP ... 59
OST ... 60
RC ... 62
XT ... 59
Internal Modes ... 62
HFINTOSC ... 62
Internal Oscillator Clock Switch Timing ... 64
LFINTOSC ... 63
Clock Switching ... 66, 67
CMOUT Register ... 180
CMxCON0 Register ... 179
CMxCON1 Register ... 180

Code Examples
A/D Conversion ... 159
Initializing PORTA ... 129, 131
Writing to Flash Program Memory ... 121
Comparator
Associated Registers ... 181
Operation ... 173
Comparator Module ... 173
Cx Output State Versus Input Conditions ... 175
Comparator Specifications ... 374
Comparators
C2OUT as T1 Gate ... 189
Complementary Waveform Generator (CWG) ... 293, 294
CONFIG1 Register ... 52
CONFIG2 Register ... 54
Core Function Register ... 37
CPU Clock Divider ... 66
Customer Change Notification Service ... 415
Customer Notification Service ... 415
Customer Support ... 415
CWG
Auto-shutdown Control ... 300
Clock Source ... 296
Output Control ... 296
Selectable Input Sources ... 296
CWGxCON0 Register ... 303
CWGxCON1 Register ... 304
CWGxCON2 Register ... 305
CWGxDBF Register ... 306
CWGxDBR Register ... 306

D

DACCON0 (Digital-to-Analog Converter Control 0) Register ... 172
DACCON1 (Digital-to-Analog Converter Control 1) Register ... 172
Data Memory ... 26
DC and AC Characteristics ... 383
DC Characteristics
Extended and Industrial ... 362
Industrial and Extended ... 355
Development Support ... 385
Device Configuration ... 51
Code Protection ... 55
Configuration Word ... 51
Device ID and Revision ID ... 56
User ID ... 55
Device ID Register ... 56
Device Overview ... 13, 107
Digital-to-Analog Converter (DAC) ... 169
Associated Registers ... 172
Effects of a Reset ... 170
Specifications ... 374

E

Effects of Reset
PWM mode ... 289
Electrical Specifications ... 353
Enhanced Mid-Range CPU ... 21
Enhanced Universal Synchronous Asynchronous Receiver Transmitter (EUSART) ... 257
Equations
Estimating USB Transceiver Current Consumption ... 322
Errata ... 11
EUSART ... 257
Associated Registers
Baud Rate Generator ... 271
Asynchronous Mode ... 259
12-bit Break Transmit and Receive ... 278
Associated Registers
Receive ... 265
Transmit ... 261
Auto-Wake-up on Break ... 276
Baud Rate Generator (BRG) ... 270
Clock Accuracy ... 266
Receiver ... 262
Setting up 9-bit Mode with Address Detect ... 264
Transmitter ... 259
Baud Rate Generator (BRG)
Auto Baud Rate Detect ... 275
Baud Rate Error, Calculating ... 270
Baud Rates, Asynchronous Modes ... 272
Formulas ... 271
High Baud Rate Select (BRGH Bit) ... 270
Synchronous Master Mode ... 279, 283
Associated Registers
Receive ... 282
Transmit ... 280
Reception ... 281
Transmission ... 279
Synchronous Slave Mode
Associated Registers
Receive ... 284
Transmit ... 283
Reception ... 284
Transmission ... 283
Extended Instruction Set
ADDFSR ... 343

F

Fail-Safe Clock Monitor ... 71
Fail-Safe Condition Clearing ... 71
Fail-Safe Detection ... 71
Fail-Safe Operation ... 71
Reset or Wake-up from Sleep ... 71
Firmware Instructions ... 339
Fixed Voltage Reference (FVR) ... 149
Associated Registers ... 150
Flash Program Memory ... 112
Associated Registers ... 128
Configuration Word w/ Flash Program Memory ... 128
Erasing ... 116
Modifying ... 122
Write Verify ... 124
Writing ... 118
FSR Register ... 37
FVRCON (Fixed Voltage Reference Control) Register ... 150

I

I^2C Mode (MSSP)
Acknowledge Sequence Timing ... 242
Bus Collision
During a Repeated Start Condition ... 246
During a Stop Condition ... 247
Effects of a Reset ... 243
I^2C Clock Rate w/BRG ... 249
Master Mode
Operation ... 234
Reception ... 240

 © 2012 Microchip Technology Inc.

Start Condition Timing 236, 237
Transmission 238
Multi-Master Communication, Bus Collision and Arbitration 243
Multi-Master Mode 243
Read/Write Bit Information (R/$\overline{W}$ Bit) 219
Slave Mode
Transmission 224
Sleep Operation 243
Stop Condition Timing 242
INDF Register 37
Indirect Addressing 47
Instruction Format 340
Instruction Set 339
ADDLW 343
ADDWF 343
ADDWFC 343
ANDLW 343
ANDWF 343
BRA 344
CALL 345
CALLW 345
LSLF 347
LSRF 347
MOVF 347
MOVIW 348
MOVLB 348
MOVWI 349
OPTION 349
RESET 349
SUBWFB 351
TRIS 352
BCF 344
BSF 344
BTFSC 344
BTFSS 344
CALL 345
CLRF 345
CLRW 345
CLRWDT 345
COMF 345
DECF 345
DECFSZ 346
GOTO 346
INCF 346
INCFSZ 346
IORLW 346
IORWF 346
MOVLW 348
MOVWF 348
NOP 349
RETFIE 350
RETLW 350
RETURN 350
RLF 350
RRF 351
SLEEP 351
SUBLW 351
SUBWF 351
SWAPF 352
XORLW 352
XORWF 352
INTCON Register 96
Internal Oscillator Block
INTOSC
Specifications 367
Internal Sampling Switch (RSS) Impedance 165
Internet Address 415
Interrupt-On-Change 143
Associated Registers 148
Interrupts 91
ADC 159
Associated registers w/ Interrupts 101
Configuration Word w/ Clock Sources 78
Configuration Word w/ Reference Clock Sources 89
TMR1 191
INTOSC Specifications 367
IOCAF Register 146
IOCAN Register 145
IOCAP Register 145
IOCBF Register 147
IOCBN Register 147
IOCBP Register 146

L

LATA Register 133, 141
LATB Register 137
Load Conditions 366
LSLF 347
LSRF 347

M

Master Synchronous Serial Port. *See* MSSP
$\overline{\text{MCLR}}$ 82
Internal 82
Memory Organization 23
Data 26
Program 23
Microchip Internet Web Site 415
MOVIW 348
MOVLB 348
MOVWI 349
MPLAB ASM30 Assembler, Linker, Librarian 386
MPLAB Integrated Development Environment Software 385
MPLAB PM3 Device Programmer 388
MPLAB REAL ICE In-Circuit Emulator System 387
MPLINK Object Linker/MPLIB Object Librarian 386
MSSP 203
SPI Mode 206
SSPBUF Register 209
SSPSR Register 209
MSSPx
I^2C Mode 214
I^2C Mode Operation 216

O

OPCODE Field Descriptions 339
OPTION 349
OPTION_REG Register 185
OSCCON Register 75
Oscillator
Associated Registers 78
Associated registers 307
Oscillator Module 57, 309
ECH 57
ECL 57
ECM 57
HS 57

INTOSC ... 57
LP ... 57
RC ... 57
XT ... 57
Oscillator Parameters ... 367
Oscillator Specifications ... 367
Oscillator Start-up Timer (OST)
Specifications ... 370
Oscillator Switching
Fail-Safe Clock Monitor ... 71
Two-Speed Clock Start-up ... 69
OSCSTAT Register ... 76
OSCTUNE Register ... 77

P

Packaging ... 389
Marking ... 389
PDIP Details ... 392
PCL and PCLATH ... 21
PCL Register ... 37
PCLATH Register ... 37
PCON Register ... 38, 85
PIE1 Register ... 38, 97
PIE2 Register ... 38, 98
Pinout Descriptions
PIC16(L)F1454 ... 15
PIC16(L)F1455 ... 17
PIC16(L)F1459 ... 19
PIR1 Register ... 38, 99
PIR2 Register ... 38, 100
PMADR Registers ... 112
PMADRH Registers ... 112
PMADRL Register ... 126
PMADRL Registers ... 112
PMCON1 Register ... 112, 127
PMCON2 Register ... 112, 128
PMDATH Register ... 125
PMDATL Register ... 125
PMDRH Register ... 126
PORTA ... 131
Associated Registers ... 134
LATA Register ... 39
PORTA Register ... 38
Specifications ... 368
PORTA Register ... 132
PORTB ... 135
Associated Registers ... 138
LATB Register ... 39
PORTB Register ... 38
PORTB Register ... 136
PORTC
Associated Registers ... 141
LATC Register ... 39
Pin Descriptions and Diagrams ... 139
PORTC Register ... 38
PORTC Register ... 140
Power-Down Mode (Sleep) ... 103
Associated Registers ... 106
Power-on Reset ... 80
Power-up Time-out Sequence ... 82
Power-up Timer (PWRT) ... 80
Specifications ... 370
PR2 Register ... 38
Program Memory ... 23
Map and Stack (PIC16(L)F1509 ... 24
Programming, Device Instructions ... 339
Pulse Width Modulation (PWM) ... 287
Associated registers w/ PWM ... 292
PWM Mode
Duty Cycle ... 288
Effects of Reset ... 289
Example PWM Frequencies and
Resolutions, 20 MHZ ... 289
Example PWM Frequencies and
Resolutions, 8 MHz ... 289
Operation in Sleep Mode ... 289
Setup for Operation using PWMx pins ... 290
System Clock Frequency Changes ... 289
PWM Period ... 288
Setup for PWM Operation using PWMx Pins ... 290
PWMxCON Register ... 291
PWMxDCH Register ... 292
PWMxDCL Register ... 292

R

RCREG ... 264
RCREG Register ... 39
RCSTA Register ... 39, 268
Reader Response ... 416
Read-Modify-Write Operations ... 339
Reference Clock ... 87
Associated Registers ... 89
Registers
ADCON0 (ADC Control 0) ... 160
ADCON1 (ADC Control 1) ... 161
ADCON2 (ADC Control 2) ... 162
ADRESH (ADC Result High) with ADFM = 0) ... 163
ADRESH (ADC Result High) with ADFM = 1) ... 164
ADRESL (ADC Result Low) with ADFM = 0) ... 163
ADRESL (ADC Result Low) with ADFM = 1) ... 164
ANSELA (PORTA Analog Select) ... 133
ANSELB (PORTB Analog Select) ... 137
ANSELC (PORTC Analog Select) ... 141
APFCON (Alternate Pin Function Control) ... 130
BAUDCON (Baud Rate Control) ... 269
BDnSTAT (Buffer Descriptor n Status,
CPU Mode) ... 314, 330
BDnSTAT (Buffer Descriptor n Status,
SIE Mode) ... 315, 331
BORCON Brown-out Reset Control) ... 81
CLKRCON (Reference Clock Control) ... 88
CMOUT (Comparator Output) ... 180
CMxCON0 (Cx Control) ... 179
CMxCON1 (Cx Control 1) ... 180
Configuration Word 1 ... 52
Configuration Word 2 ... 54
Core Function, Summary ... 37
CWGxCON0 (CWG Control 0) ... 303
CWGxCON1 (CWG Control 1) ... 304
CWGxCON2 (CWG Control 1) ... 305
CWGxDBF (CWGx Dead Band Falling Count) ... 306
CWGxDBR (CWGx Dead Band Rising Count) ... 306
DACCON0 ... 172
DACCON1 ... 172
Device ID ... 56
FVRCON ... 150
INTCON (Interrupt Control) ... 96
IOCAF (Interrupt-on-Change PORTA Flag) ... 146
IOCAN (Interrupt-on-Change PORTA
Negative Edge) ... 145
IOCAP (Interrupt-on-Change PORTA
Positive Edge) ... 145

 © 2012 Microchip Technology Inc.

IOCBF (Interrupt-on-Change PORTB Flag) 147
IOCBN (Interrupt-on-Change PORTB Negative Edge) 147
IOCBP (Interrupt-on-Change PORTB Positive Edge) 146
LATA (Data Latch PORTA) 133
LATB (Data Latch PORTB) 137
LATC (Data Latch PORTC) 141
OPTION_REG (OPTION) 185
OSCCON (Oscillator Control) 75
OSCSTAT (Oscillator Status) 76
OSCTUNE (Oscillator Tuning) 77
PCON (Power Control Register) 85
PCON (Power Control) 85
PIE1 (Peripheral Interrupt Enable 1) 97
PIE2 (Peripheral Interrupt Enable 2) 98
PIR1 (Peripheral Interrupt Register 1) 99
PIR2 (Peripheral Interrupt Request 2) 100
PMADRL (Program Memory Address) 126
PMCON1 (Program Memory Control 1) 127
PMCON2 (Program Memory Control 2) 128
PMDATH (Program Memory Data) 125
PMDATL (Program Memory Data) 125
PMDRH (Program Memory Address) 126
PORTA 132
PORTB 136
PORTC 140
PWMxCON (PWM Control) 291
PWMxDCH (PWM Control) 292
PWMxDCL (PWM Control) 292
RCREG 275
RCSTA (Receive Status and Control) 268
SPBRGH 270
SPBRGL 270
Special Function, Summary 38
SSPADD (MSSP Address and Baud Rate, I^2C Mode) 255
SSPCON1 (MSSP Control 1) 252
SSPCON2 (SSP Control 2) 253
SSPCON3 (SSP Control 3) 254
SSPMSK (SSP Mask) 255
SSPSTAT (SSP Status) 250
STATUS 27
T1CON (Timer1 Control) 195
T1GCON (Timer1 Gate Control) 196
T2CON 201
TRISA (Tri-State PORTA) 132
TRISB (Tri-State PORTB) 136
TRISC (Tri-State PORTC) 140
TXSTA (Transmit Status and Control) 267
UCFG (USB Configuration) 310, 327
UCON (USB Control) 310, 326
UEIE (USB Error Interrupt Enable) 335
UEIE (USB Interrupt Enable) 319
UEIR (USB Error Interrupt Status) 319, 334
UEPN (USB Endpoint Control) 312
UEPn (USB Endpoint n Control) 329
UIE (USB Interrupt Enable) 319, 333
UIR (USB Interrupt Status) 319, 332
USTAT (USB Status) 312, 328
VREGCON (Voltage Regulator Control) 106
WDTCON (Watchdog Timer Control) 110
WPUA (Weak Pull-up PORTA) 134
WPUB (Weak Pull-up PORTB) 138
RESET 349
Reset 79
Reset Instruction 82
Resets 79
Associated Registers 86
Revision History 407

S

Software Simulator (MPLAB SIM) 387
SPBRG Register 39
SPBRGH Register 270
SPBRGL Register 270
Special Function Registers (SFRs) 38
SPI Mode (MSSP)
SPI Clock 209
SPI Mode (MSSPx)
Associated Registers 213
SSPADD Register 255
SSPCON1 Register 252
SSPCON2 Register 253
SSPCON3 Register 254
SSPMSK Register 255
SSPOV 240
SSPOV Status Flag 240
SSPSTAT Register 250
R/$\overline{W}$ Bit 219
ST
Block Diagram 73
Stack 45
Accessing 45
Reset 47
Stack Overflow/Underflow 82
STATUS Register 27
SUBWFB 351

T

T1CON Register 38, 195
T1GCON Register 196
T2CON (Timer2) Register 201
T2CON Register 38
Temperature Indicator
Associated Registers 152
Temperature Indicator Module 151
Thermal Considerations 365
Timer0 183
Associated Registers 185
Operation 183
Specifications 371
Timer1 187
Associated registers 197
Asynchronous Counter Mode 189
Reading and Writing 189
Clock Source Selection 188
Interrupt 191
Operation 188
Operation During Sleep 191
Oscillator 189
Prescaler 189
Specifications 371
Timer1 Gate
Selecting Source 189
TMR1H Register 187
TMR1L Register 187
Timer2 199
Associated registers 202

Timers
Timer1
T1CON ... 195
T1GCON ... 196
Timer2
T2CON ... 201
Timing Diagrams
A/D Conversion ... 372
A/D Conversion (Sleep Mode) ... 373
Acknowledge Sequence ... 242
Asynchronous Reception ... 264
Asynchronous Transmission ... 260
Asynchronous Transmission (Back to Back) ... 260
Auto Wake-up Bit (WUE) During
Normal Operation ... 277
Auto Wake-up Bit (WUE) During Sleep ... 277
Automatic Baud Rate Calibration ... 275
Baud Rate Generator with Clock Arbitration ... 235
BRG Reset Due to SDA Arbitration
During Start Condition ... 245
Brown-out Reset (BOR) ... 369
Brown-out Reset Situations ... 81
Bus Collision During a Repeated
Start Condition (Case 1) ... 246
Bus Collision During a Repeated
Start Condition (Case 2) ... 246
Bus Collision During a Start Condition (SCL = 0) ... 245
Bus Collision During a Stop Condition (Case 1) ... 247
Bus Collision During a Stop Condition (Case 2) ... 247
Bus Collision During Start Condition (SDA only) ... 244
Bus Collision for Transmit and Acknowledge ... 243
CLKOUT and I/O ... 368
Clock Synchronization ... 232
Clock Timing ... 367
Comparator Output ... 173
Fail-Safe Clock Monitor (FSCM) ... 72
First Start Bit Timing ... 236
I^2C Bus Data ... 379
I^2C Bus Start/Stop Bits ... 379
I^2C Master Mode (7 or 10-Bit Transmission) ... 239
I^2C Master Mode (7-Bit Reception) ... 241
I^2C Stop Condition Receive or Transmit Mode ... 242
INT Pin Interrupt ... 94
Internal Oscillator Switch Timing ... 65
Repeat Start Condition ... 237
Reset Start-up Sequence ... 83
Reset, WDT, OST and Power-up Timer ... 369
Send Break Character Sequence ... 278
SPI Master Mode (CKE = 1, SMP = 1) ... 376
SPI Mode (Master Mode) ... 209
SPI Slave Mode (CKE = 0) ... 377
SPI Slave Mode (CKE = 1) ... 377
Synchronous Reception (Master Mode, SREN) ... 282
Synchronous Transmission ... 280
Synchronous Transmission (Through TXEN) ... 280
Timer0 and Timer1 External Clock ... 370
Timer1 Incrementing Edge ... 191
Two Speed Start-up ... 70
USART Synchronous Receive (Master/Slave) ... 375
USART Synchronous Transmission (Master/Slave) . 375
Wake-up from Interrupt ... 104
Timing Parameter Symbology ... 366
Timing Requirements
I^2C Bus Data ... 380
I2C Bus Start/Stop Bits ... 379
SPI Mode ... 378
TMR0 Register ... 38
TMR1H Register ... 38
TMR1L Register ... 38
TMR2 Register ... 38
TRIS ... 352
TRISA Register ... 38, 132
TRISB Register ... 38, 136
TRISC ... 139
TRISC Register ... 38, 140
Two-Speed Clock Start-up Mode ... 69
TXREG ... 259
TXREG Register ... 39
TXSTA Register ... 39, 267
BRGH Bit ... 270

U

Universal Serial Bus
Associated Registers ... 336
BD Address Validation ... 315
BD Byte Count ... 315
Buffer Descriptor Table (BDT) ... 313
Buffer Descriptors
Assignment in Different Buffering Modes ... 316
Example ... 314
Memory Map ... 316
Register Summary ... 317
Buffer Descriptors (BDn) ... 313
Interrupt-on-change ... 323
Interrupts ... 318
and USB Transactions ... 318
Oscillator ... 323
Ping-Pong Buffering ... 315
Power Modes ... 320
RAM ... 313
Memory Map ... 313
Status and Control ... 310
Universal Serial Bus (USB) ... 309
USART
Synchronous Master Mode
Requirements, Synchronous Receive ... 375
Requirements, Synchronous Transmission ... 375
Timing Diagram, Synchronous Receive ... 375
Timing Diagram, Synchronous Transmission ... 375
USB ... 309
USB Operation ... 66

V

VREF. *SEE* ADC Reference Voltage
VREGCON Register ... 106

W

Wake-up on Break ... 276
Wake-up Using Interrupts ... 104
Watchdog Timer (WDT) ... 82
Associated Registers ... 111
Modes ... 108
Specifications ... 370
WCOL ... 235, 238, 240, 242
WCOL Status Flag ... 235, 238, 240, 242
WDTCON Register ... 110
WPUA Register ... 134
WPUB Register ... 138
Write Protection ... 55
WWW Address ... 415
WWW, On-Line Support ... 11

 © 2012 Microchip Technology Inc.

THE MICROCHIP WEB SITE

Microchip provides online support via our WWW site at www.microchip.com. This web site is used as a means to make files and information easily available to customers. Accessible by using your favorite Internet browser, the web site contains the following information:

- **Product Support** – Data sheets and errata, application notes and sample programs, design resources, user's guides and hardware support documents, latest software releases and archived software
- **General Technical Support** – Frequently Asked Questions (FAQ), technical support requests, online discussion groups, Microchip consultant program member listing
- **Business of Microchip** – Product selector and ordering guides, latest Microchip press releases, listing of seminars and events, listings of Microchip sales offices, distributors and factory representatives

CUSTOMER CHANGE NOTIFICATION SERVICE

Microchip's customer notification service helps keep customers current on Microchip products. Subscribers will receive e-mail notification whenever there are changes, updates, revisions or errata related to a specified product family or development tool of interest.

To register, access the Microchip web site at www.microchip.com. Under "Support", click on "Customer Change Notification" and follow the registration instructions.

CUSTOMER SUPPORT

Users of Microchip products can receive assistance through several channels:

- Distributor or Representative
- Local Sales Office
- Field Application Engineer (FAE)
- Technical Support

Customers should contact their distributor, representative or field application engineer (FAE) for support. Local sales offices are also available to help customers. A listing of sales offices and locations is included in the back of this document.

Technical support is available through the web site at: http://microchip.com/support

READER RESPONSE

It is our intention to provide you with the best documentation possible to ensure successful use of your Microchip product. If you wish to provide your comments on organization, clarity, subject matter, and ways in which our documentation can better serve you, please FAX your comments to the Technical Publications Manager at (480) 792-4150.

Please list the following information, and use this outline to provide us with your comments about this document.

TO: Technical Publications Manager

RE: Reader Response

Total Pages Sent _____

From: Name _____

Company _____

Address _____

City / State / ZIP / Country _____

Telephone: (_____) _____ - _____ FAX: (_____) _____ - _____

Application (optional):

Would you like a reply? ___Y ___N

Device: PIC16(L)F1454/5/9 Literature Number: DS41639A

Questions:

1. What are the best features of this document?

_____

_____

2. How does this document meet your hardware and software development needs?

_____

_____

3. Do you find the organization of this document easy to follow? If not, why?

_____

_____

4. What additions to the document do you think would enhance the structure and subject?

_____

_____

5. What deletions from the document could be made without affecting the overall usefulness?

_____

_____

6. Is there any incorrect or misleading information (what and where)?

_____

_____

7. How would you improve this document?

_____

_____

 © 2012 Microchip Technology Inc.

PRODUCT IDENTIFICATION SYSTEM

To order or obtain information, e.g., on pricing or delivery, refer to the factory or the listed sales office.

PART NO.	[X](1)	-	X	/XX	XXX
Device	Tape and Reel Option		Temperature Range	Package	Pattern

Device:	PIC16F1454, PIC16LF1454, PIC16F1455, PIC16LF1455, PIC16F1459, PIC16LF1459	
Tape and Reel Option:	Blank	= Standard packaging (tube or tray)
	T	= Tape and Reel(1)
Temperature Range:	I	= -40°C to +85°C (Industrial)
	E	= -40°C to +125°C (Extended)
Package:(2)	ML	= QFN 4x4
	P	= Plastic DIP
	SS	= SSOP
	ST	= TSSOP
	SO	= SOIC 20-Lead
	SL	= SOIC 14-Lead
Pattern:	QTP, SQTP, Code or Special Requirements (blank otherwise)	

Examples:

a) PIC16F1454T - E/SL
Tape and Reel,
Industrial temperature,
SOIC package

b) PIC16F1459 - I/P
Industrial temperature
PDIP package

c) PIC16F1459 - E/ML
Extended temperature,
QFN package

Note 1: Tape and Reel identifier only appears in the catalog part number description. This identifier is used for ordering purposes and is not printed on the device package. Check with your Microchip Sales Office for package availability with the Tape and Reel option.

2: Small form-factor packaging options may be available. Please check www.microchip.com/packaging for small form-factor package availability, or contact your local sales office.

Worldwide Sales and Service

AMERICAS

Corporate Office
2355 West Chandler Blvd.
Chandler, AZ 85224-6199
Tel: 480-792-7200
Fax: 480-792-7277
Technical Support:
http://www.microchip.com/support
Web Address:
www.microchip.com

Atlanta
Duluth, GA
Tel: 678-957-9614
Fax: 678-957-1455

Boston
Westborough, MA
Tel: 774-760-0087
Fax: 774-760-0088

Chicago
Itasca, IL
Tel: 630-285-0071
Fax: 630-285-0075

Cleveland
Independence, OH
Tel: 216-447-0464
Fax: 216-447-0643

Dallas
Addison, TX
Tel: 972-818-7423
Fax: 972-818-2924

Detroit
Farmington Hills, MI
Tel: 248-538-2250
Fax: 248-538-2260

Indianapolis
Noblesville, IN
Tel: 317-773-8323
Fax: 317-773-5453

Los Angeles
Mission Viejo, CA
Tel: 949-462-9523
Fax: 949-462-9608

Santa Clara
Santa Clara, CA
Tel: 408-961-6444
Fax: 408-961-6445

Toronto
Mississauga, Ontario, Canada
Tel: 905-673-0699
Fax: 905-673-6509

ASIA/PACIFIC

Asia Pacific Office
Suites 3707-14, 37th Floor
Tower 6, The Gateway
Harbour City, Kowloon
Hong Kong
Tel: 852-2401-1200
Fax: 852-2401-3431

Australia - Sydney
Tel: 61-2-9868-6733
Fax: 61-2-9868-6755

China - Beijing
Tel: 86-10-8569-7000
Fax: 86-10-8528-2104

China - Chengdu
Tel: 86-28-8665-5511
Fax: 86-28-8665-7889

China - Chongqing
Tel: 86-23-8980-9588
Fax: 86-23-8980-9500

China - Hangzhou
Tel: 86-571-2819-3187
Fax: 86-571-2819-3189

China - Hong Kong SAR
Tel: 852-2401-1200
Fax: 852-2401-3431

China - Nanjing
Tel: 86-25-8473-2460
Fax: 86-25-8473-2470

China - Qingdao
Tel: 86-532-8502-7355
Fax: 86-532-8502-7205

China - Shanghai
Tel: 86-21-5407-5533
Fax: 86-21-5407-5066

China - Shenyang
Tel: 86-24-2334-2829
Fax: 86-24-2334-2393

China - Shenzhen
Tel: 86-755-8203-2660
Fax: 86-755-8203-1760

China - Wuhan
Tel: 86-27-5980-5300
Fax: 86-27-5980-5118

China - Xian
Tel: 86-29-8833-7252
Fax: 86-29-8833-7256

China - Xiamen
Tel: 86-592-2388138
Fax: 86-592-2388130

China - Zhuhai
Tel: 86-756-3210040
Fax: 86-756-3210049

ASIA/PACIFIC

India - Bangalore
Tel: 91-80-3090-4444
Fax: 91-80-3090-4123

India - New Delhi
Tel: 91-11-4160-8631
Fax: 91-11-4160-8632

India - Pune
Tel: 91-20-2566-1512
Fax: 91-20-2566-1513

Japan - Osaka
Tel: 81-66-152-7160
Fax: 81-66-152-9310

Japan - Yokohama
Tel: 81-45-471- 6166
Fax: 81-45-471-6122

Korea - Daegu
Tel: 82-53-744-4301
Fax: 82-53-744-4302

Korea - Seoul
Tel: 82-2-554-7200
Fax: 82-2-558-5932 or
82-2-558-5934

Malaysia - Kuala Lumpur
Tel: 60-3-6201-9857
Fax: 60-3-6201-9859

Malaysia - Penang
Tel: 60-4-227-8870
Fax: 60-4-227-4068

Philippines - Manila
Tel: 63-2-634-9065
Fax: 63-2-634-9069

Singapore
Tel: 65-6334-8870
Fax: 65-6334-8850

Taiwan - Hsin Chu
Tel: 886-3-5778-366
Fax: 886-3-5770-955

Taiwan - Kaohsiung
Tel: 886-7-536-4818
Fax: 886-7-330-9305

Taiwan - Taipei
Tel: 886-2-2500-6610
Fax: 886-2-2508-0102

Thailand - Bangkok
Tel: 66-2-694-1351
Fax: 66-2-694-1350

EUROPE

Austria - Wels
Tel: 43-7242-2244-39
Fax: 43-7242-2244-393

Denmark - Copenhagen
Tel: 45-4450-2828
Fax: 45-4485-2829

France - Paris
Tel: 33-1-69-53-63-20
Fax: 33-1-69-30-90-79

Germany - Munich
Tel: 49-89-627-144-0
Fax: 49-89-627-144-44

Italy - Milan
Tel: 39-0331-742611
Fax: 39-0331-466781

Netherlands - Drunen
Tel: 31-416-690399
Fax: 31-416-690340

Spain - Madrid
Tel: 34-91-708-08-90
Fax: 34-91-708-08-91

UK - Wokingham
Tel: 44-118-921-5869
Fax: 44-118-921-5820

11/29/11

© 2012 Microchip Technology Inc.